Department of Defense Acquisition Manager's Handbook for Insensitive Munitions

November 2008, Rev 2

"I was the pilot of an A-4I Skyhawk on the port side aft. As I started my engine, I heard a 'whoosh' and I saw a low-order explosion in front of me. I didn't see what the primary cause was since I had my head down in the cockpit, turning on various electronics equipment. I looked up immediately and saw the two A4s in front of the plane engulfed in flames and JP-5 fluid spreading pools in front of the aircraft. I saw a 1,000-pound bomb roll off the aircraft and roll about six fleet back toward the middle of the flight deck, and the bomb was resting in the pool of the burning JP-5 fluid. The flames were spreading rapidly, moving with the wind on the desk. I began making preparations to exit the aircraft. I shut down the engine and at the time I had the impression that a 20mm cannon shell had exploded in the aircraft. I don't think this was the case, however. I saw one man covered with flames blowing toward the center of the flight desk from the edge of the plans and I watched him making efforts to beat out the flames on his body."

"Two men rushed out on my right from the starboard side of the flight desk. Two boys from VA-106 and another yellow jersey came from the forward end of the ship and the three men began to drag the man from the vicinity of the fire and take his clothes off and put the fires out. The fire was increasing in intensity and spreading as the wind blow the fuel aft and in a few moments a large fireball erupted in the vicinity of the 1,000-pound bomb and engulfed my aircraft!..."

"I saw two of the pilots to my left side, while I was still in my plane, still in theirs. One had his canopy closed and the other one, I'm not sure. I went about one or two hundred feet when a very large blast knocked me up against the side of the fighter on my right. I regained my feet and continued on my way past number four elevator and was going around a Vigilante (RA-5C) when another explosion knocked me to my knees. I got up and continued forward and went around the aft of the island. When I observed the first explosion, I saw two men who were running aft with fire hoses taking the full blast. I believe they were killed instantly…"

Statement from LCDR Robert "Bo" Browning, a member of V-A06 deployed aboard USS Forrestal (CVA 59), July 29, 1067: Personal Account of Fire Aboard USS FORRESTAL (CVA-59), in the Gulf of Tonkin

FOREWORD

This Handbook provides munition developers with the necessary tools to efficiently and effectively implement planning processes and applications that meet and/or exceed Department of Defense (DoD) Insensitive Munitions (IM) requirements.

The need for safe, effective and reliable munitions systems remains significant in our current operating environments. United States Forces are in daily contact with both collaborative fighting partners and multiple hostile elements, which carries strategic implications. Munitions systems, by their very nature, bear a disruptive potential that can too easily serve as the single point of failure in carrying out these strategic operations. Personnel and equipment casualties stemming from inadvertent munitions detonation are outcomes that we must strive to avoid, given that proven technologies and the means to implement them are within reach. Insensitive munitions, and the programs and policies with which we acquire them, therefore, remain a top DoD priority.

Our Research, Development, Testing and Evaluation (RDT&E) communities have come a long way in improving munitions response, minimizing the risk of, and in some cases completely precluding unintended detonation. The US munitions stockpile is among the safest in the world, and our commitment to keeping it secure and technically advanced are aided by IM requirements developed from committed awareness of hard-learned lessons. The DoD has made significant progress in improving the performance, survivability, and interoperability of munitions through steadfast adherence to these requirements.

While our RDT&E personnel are working to mitigate the inherent hazards of munitions and weapon systems, our acquisition communities are moving forward to the strategic planning phase of the IM life cycle. We are dedicated to ensuring that every Program Management Office (PMO) clearly understands the concepts and requirements associated with integrating acquisition management, the assessment of ammunition programs, identification of potential opportunities for IM improvement, and prescribed actions to develop and execute detailed IM improvement plans.

The goal is the life cycle transition of weapon systems and associated munition programs from RDT&E through demilitarization with full IM compliancy.

Our warfighters, and those under their protection, deserve nothing less than our full dedication to this effort.

Anthony Melita

OUSD (AT&L)/PSAL, W&M

Table Of Contents

FOREWORD iii

Table Of Contents iv

List of Tables viii

List of Figures viii

1. Purpose and Application 1

1.1 Purpose 1

1.2 Application 1

1.3 Other Directives Governing IM 1

1.4 Handbook Publication and Maintenance 1

2. IM in Concept: Insensitive Munitions Policies 2

2.1 Policy Development Timeline 2

2.2 Statutory Authority 2

2.2.1 US Code, Title 10, IM Requirements 2

2.2.2 DoDD 5000.1, The Defense Acquisition System 3

3. Development of the IM Strategic Plan 5

3.1 Development of Guidance on IM Strategic Planning 5

3.2 The IM Strategic Planning Process 6

3.2.1 Organizational Responsibilities for IMSP Development/ Review 6

3.3 The Munitions Portfolio 7

3.4 Plan of Action & Milestones 7

3.4.1 IMSPs and Technology Insertion 8

3.5 IM Testing Standards 8

3.6 IMSP Review Responsibilities 9

3.7 IM in Acquisition 9

3.7.1 Service Implementation Instructions for IM 9

3.7.2 US Army 9

3.7.3 US Navy 10

3.7.4 US Air Force 11

3.7.5 US Special Operations Command 12

3.7.6 Missile Defense Agency 12

4. Tools of the Trade 13

4.1 Preparing an IM Threat Hazard Assessment 13
4.2 Test Plans: Efficiencies of Combining IM/Safety/Hazard Classification Tests 14
4.2.1 Using Engineering Assessment Versus Testing to Predict IM Performance 16
4.3 Test Reports 17
4.4 Preparing IM Test Results 19
5. Request for Out-of-Cycle IM Procurements 21
5.1 Purpose of Out-of-Cycle IM Procurements 21
5.2 Development/Review of Out-of-Cycle Procurement Requests 21
6. Frequently Asked Questions 24
7. Lessons Learned: Building the "Perfect" Insensitive Munitions Strategic Plan 28
7.1 Issue 1: PEO or Service Munitions Portfolio 28
7.2 Issue 2: Business Rules Compliance 28
7.3 Issue 3: Plans of Action and Milestones 28
7.4 Issue 4: Inter-PEO Coordination 29
7.5 Issue 5: Unfunded Requirements 29
7.6 Issue 6: File Management 29
7.7 Issue 7: IM Certifications 30
Appendix A: History of IM Programs and Policies A-1
Appendix A.1 Historical Munitions Incidents A-2
Appendix A.2 Department of Defense IM Policy Implementation A-4
Appendix B: IM Policy Reference Documents B-1
Appendix B.1 Title 10, Chapter 142, Sect. 2389 ..... B-2
Appendix B.2 DoDD 5000.1, The Defense Acquisition System B-2
Appendix B.3 CJCSM 3170.01C, "Operation of the Joint Capabilities Integration and Development System (JCIDS)" B-2
Appendix B.4 Memorandum of Agreement On Establishment Of A Joint Requirement For Insensitive Munitions, September 1987 ..... B-2
Appendix B.5 Joint Requirement Oversight Council Memorandum (JROCM) - 5 December 1988, Subject: "Insensitive Munitions Joint Requirement Revision" B-2
Appendix B.6 Joint Staff, Force Protection Functional Capabilities Board Chairman Memorandum of 22 March, 2005 Subject: "Insensitive Munitions Strategic Plan Review Guidance for Joint Service Insensitive Munitions Technical Panel (JSIMTP) Members" B-2

Appendix B.7 Joint Requirement Oversight Council Memorandum (JROCM) 235-06, dated 6 November 2006, Subject: "Insensitive Munitions Standards and Passing Criteria" B-3

Appendix B.8 Joint Requirement Oversight Council Memorandum (JROCM) 005-07, dated 4 January 2007, Subject: "DOD FY 2007–2008 Insensitive Munitions Strategic Plan" B-3

Appendix B.9 OUSD IM Strategic Planning Policy (July 2004 and March 2007) B-3

Appendix B.10 OUSD IM Certification B-3

Appendix B.11 OUSD Clarification of JROC "Business Rules" for Tier Assignment, IM Investment, and IM Reaction for Insensitive Munitions Strategic Planning (IMSP) and Plan of Action and Milestones (POA&M) Development B-4

Appendix B.12 MIL-STD-2105C & Applicable STANAGs & Allied Ordnance Publications ... B-7

Appendix B.13 Allied Ordnance Publications B-8

Appendix B.14 The Office of the Secretary of Defense (Acquisition Technology and Logistics) [OSD (AT&L)] Memorandum, dated 19 March 2007, Subject: "Insensitive Munitions Strategic Planning (IMSP)" B-9

Appendix B.15 Considerations for Determining IM Investment for Insensitive Munitions Strategic Planning (IMSP), and Plan of Action and Milestones (POA&M) Development B-20

Appendix B.16 JROC "Business Rules" for Clarification of Tier Assignment Insensitive Munitions Strategic Planning (IMSP), and Plan of Action and Milestones (POA&M) Development B-24

Appendix C: IM Strategic Plan Templates C-1

Appendix C.1 Appendix C: IM Strategic Plan Templates C-2

Appendix C.2 Plan of Action and Milestones Format C-2

Appendix C.3 POA&M Template C-2

Appendix D: IM Acquisition Templates D-1

Appendix D.1 IM Threat Hazard Assessments D-2

Appendix D.2 IM Test Plans D-2

Appendix D.3 IM Test Reports D-4

Appendix E: Definitions E-1

Appendix F: Service IM Points of Contact F-1

Appendix G: US Army Policy G-1

Appendix G.1 Memorandum, Assistant Secretary of the Army (Acquisition, Logistics, and Technology) (ASA(AL), Subject: Army Executive Agent for Insensitive Munitions G-3

Appendix H: US Navy Policy H-1

Appendix H.1 OPNAV Instruction 8010.13D, Department of the Navy Policy on Insensitive Munitions, 16 Aug 06 ..... H-2

Appendix I: US Air Force Policy I-1

Appendix J: US Special Operations Command (USSOCOM) Policy J-1

Appendix K: Missile Defense Agency Policy K-1

Appendix L: Defining IM Related Boards/Activities L-1

List of Tables

TABLE 2-1. POLICY DEVELOPMENT TIMELINE 2
TABLE 4-1. DOD SERVICE IM THA REVIEW BOARDS 14
TABLE 4-2. REFERENCE CHART FOR IM REACTION TYPE 19
TABLE 4-3. REFERENCE CHART FOR SCORE CHARACTERISTICS 20

List of Figures

FIGURE 2-1. MILESTONES AND POLICES GOVERNING IM 3
FIGURE 3-1. ORGANIZATIONS INVOLVED IN THE IMSP DEVELOPMENT/REVIEW PROCESS 6
FIGURE 3-2. IM STANDARDIZATION TEST CRITERIA (FOLD-OUT) 9
FIGURE 4-1. IM TESTS AS DEFINED BY MIL-STD-2105C 15
FIGURE 5-1. OUT-OF-CYCLE WAIVER REQUEST PROCESS 22

1. Purpose and Application

1.1 Purpose

This Handbook serves as a practical tool to assist Acquisition Executives, Program Managers and Project Managers, and other Insensitive Munitions (IM)-related personnel in decision development by explaining Department of Defense (DoD) expectations and requirements. These expectations and requirements were instituted as a result of past IM-related accidents, which are placed in historical context in Appendix A.

1.2 Application

The Handbook is being put forth as a single source document for Acquisition Managers to locate DoD and Military Service policy, procedural references, and technical information about DoD IM policies, business rules, Joint IM testing standards, and strategic planning.

This Handbook will explicitly specify all necessary references, and for that reason will be a key resource for IM personnel and their staffs in meeting DoD requirements.

1.3 Other Directives Governing IM

The information presented in this Handbook does not replace or repeal assessments mandated by other established documents, or policies regarding particular munitions' safety and suitability for use by the Services.

Also, the Handbook does not replace legislative and regulatory requirements relating to the manufacture, transportation, storage, and disposal of munitions.

1.4 Handbook Publication and Maintenance

This Handbook is published under the authority of the Secretary of Defense. It will be maintained by the Office of the Under Secretary of Defense for Acquisition, Technology, and Logistics (OUSD (AT&L)). The Handbook will be reviewed on an annual basis to ensure applicability and to capture evolving requirements.

2. IM in Concept: Insensitive Munitions Policies

2.1 Policy Development Timeline

IM program policy has developed over time, and has been driven by both operational requirements and acquisition policies, as shown below in Table 2.1.

1987	Component Acquisition Executives signed a Memorandum of Agreement (MOA) establishing a joint requirement for insensitive munitions
1988	The Joint Requirement Oversight Council (JROC) recognized that IM is driven by both requirements and acquisition policies
Early 1990s	The JOCG noted a need for a policy statement regarding IM during the acquisition process
December 1992	The JOCG recommended the inclusion of IM policy into DOD Instruction (DODI) 5000.2 to standardize the decision processes relating to munitions sensitivity to unplanned stimuli. (A copy of this memorandum and the recommended language for DODI 5000.2 is provided in Appendix B.)
November 1994	The OUSD requested a position on IM policy from the JROC. This memorandum noted the perspectives of including IM in acquisition and requirements processes. The memo requested that JROC recommend which realm–acquisition or requirements–best addressed the DoD goal of "meeting operational requirements with the least sensitive system design available."
November 1995	The JROC indicated that IM shall be included in the acquisition process
July 2004	The OUSD issued the first of two memoranda establishing the rationale for the development of IM Strategic Plans (IMSPs), defining their content, and prescribing how often they are to be submitted
March 2007	The OUSD determined that IMSPs would be submitted bi-annually, beginning with the FY 2009/FY 2010 plans

Table 2-1. Policy Development Timeline

Significant policies resulting from JROC decisions can be found in Appendix B, and below in Figure 2-1.

2.2 Statutory Authority

While there are many policies, statutes, and NATO Standardization Agreements (STANAGS) covering the rationale, format, content, and testing configurations of IM-related materials, the following references are the current primary guidelines governing IM. A detailed listing of the policies can be found in Appendix B.

2.2.1 US Code, Title 10, IM Requirements

IM requirements are set forth in US Code, Title 10, Subtitle A, Part IV, Chapter 141, Section 2389, which states, "The Secretary of Defense shall ensure, to the extent practicable, that

Insensitive Munitions under development or procurement are safe throughout development and fielding when subject to unplanned stimuli."

2.2.2 DoDD 5000.1, The Defense Acquisition System

Per DoDD 5000.1, dated May 12, 2003, the Chairman of the Joint Chiefs of Staff (CJCS) shall provide advice and assessment on military capability needs in accordance with Sections 153, 163 and 181 of Title 10, which address the IM Program. The CJCS:

- shall present this advice and assessment through validated and approved capabilities documents
- may engage the Components and Agencies to provide this advice and assessment
- may establish procedures to carry out this responsibility, consistent with this Directive and in coordination with the USD (AT&L).

2.2.2.1 Joint Requirements Oversight Council

Title 10 of the US Code also established the JROC. The JROC charter provides overarching guidance for both the JROC proper and its direct support sub-panels. This instruction delineates the responsibilities and procedures for organizations involved in bringing recommendations forward to the JROC and, ultimately, to the Chairman for review and action. Significant policies resulting from JROC decisions can be found in Appendix B, and below in Figure 2-1.

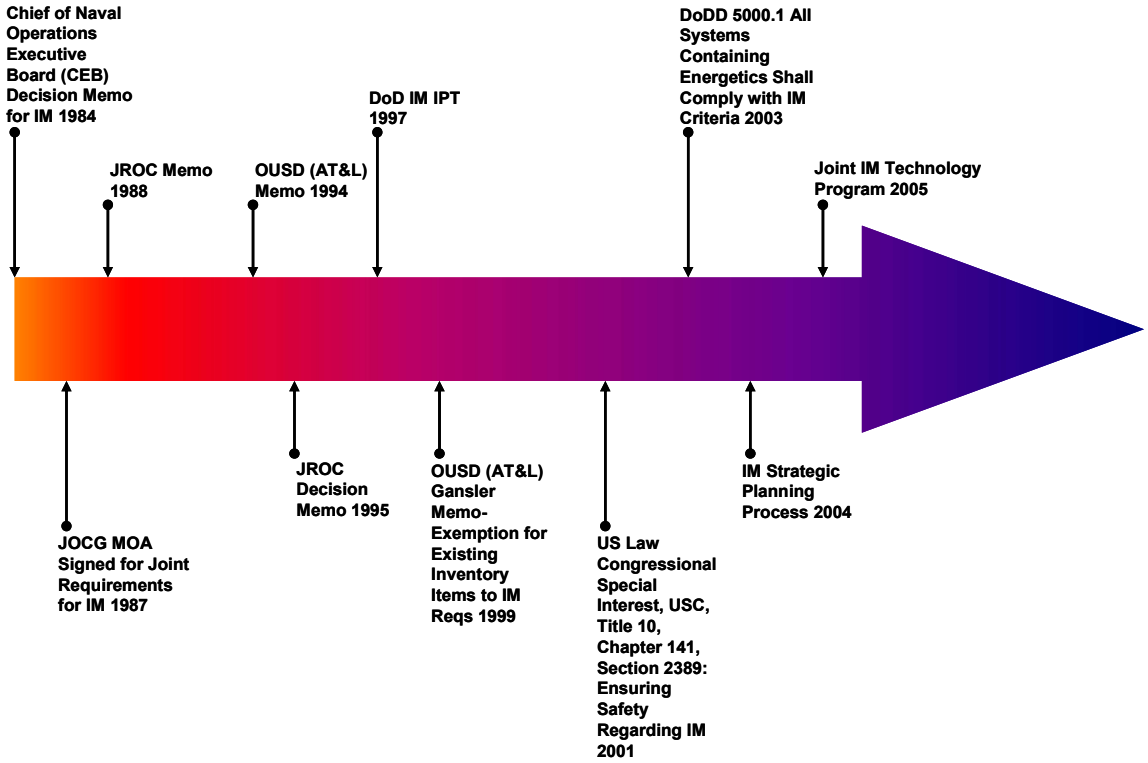

Figure 2-1. Milestones and Polices Governing IM

The preceding policies are the structural support upon which the IM concept has been built. The IM concept provides effective performance to the US and its allied warfighters, while offering passive force protection, saving lives, and providing the following operational advantages:

- *IM can be a force multiplier*: Ships and other military platforms may be able to stay on station longer–engaging the enemy and fulfilling mission objectives–if they are not subject to extensive collateral damage from weapon or ordnance accidents.
- *IM offers tactical and logistical advantages*. Force protection is increasingly required in populated urban centers as the war on terrorism and asymmetric warfare expands.
- Conventional weapons stored in proximity to civilian populations make them an attractive target for terrorists and political extremists to inflict casualties on non-combatants.
- Weapons that comply with IM requirements minimize the threat to the surrounding community and infrastructure, and offer the warfighter an opportunity to increase the forward-deployed weapon inventory.
- *IM is potentially more cost effective and efficient to transport, store, and handle*. Weapons meeting all IM requirements may be granted a reduced hazard classification (HC) compared to non-IM variants of the same weapon. Reducing the HC may make it possible to reduce the real estate involved in storing and handling these systems.

3. Development of the IM Strategic Plan

3.1 Development of Guidance on IM Strategic Planning

IMSPs assist the JROC in its review of requests to deviate from established IM requirements, and to evaluate approvals of planned munition procurements.

Prior to publication of its IMSP submission requirements, the JROC monitored compliance with respect to IM requirements policy through an established waiver process. This process was ineffective. It limited the JROC's scrutiny of individual munition programs. Further, PEOs and Services lacked guidance on how to define and document their IM efforts and investment priorities.

The OSD (AT&L) sought to remedy this deficiency with its distribution of the IMSP Memorandum, dated 21 July 2004. This memo established the first DoD policy for the annual submission of IMSPs to the JROC and the OSD (AT&L).

The JROC has instituted the following administrative measures to make the IMSP planning process more efficient:

- CJCSI 3170 eliminated the Joint Capabilities Integration and Development System Insensitive Munitions Certification.
- The periodicity for IMSPs was changed to a two (2) year submission cycle, starting with the FY 2009/FY 2010 IMSP.

The IMSP planning process has provided a forum in which munition program representatives have become more involved in the planning and execution of IM activities. As a result of this hands-on involvement, fundamental technical knowledge has been significantly enhanced. PEO and Service representatives are challenging the technical community to review and validate IM policy to ensure the technical requirements remain at the right level

3.2 The IM Strategic Planning Process

3.2.1 Organizational Responsibilities for IMSP Development/ Review

Figure 3-1 depicts the organizations involved in the IMSP development/review process.

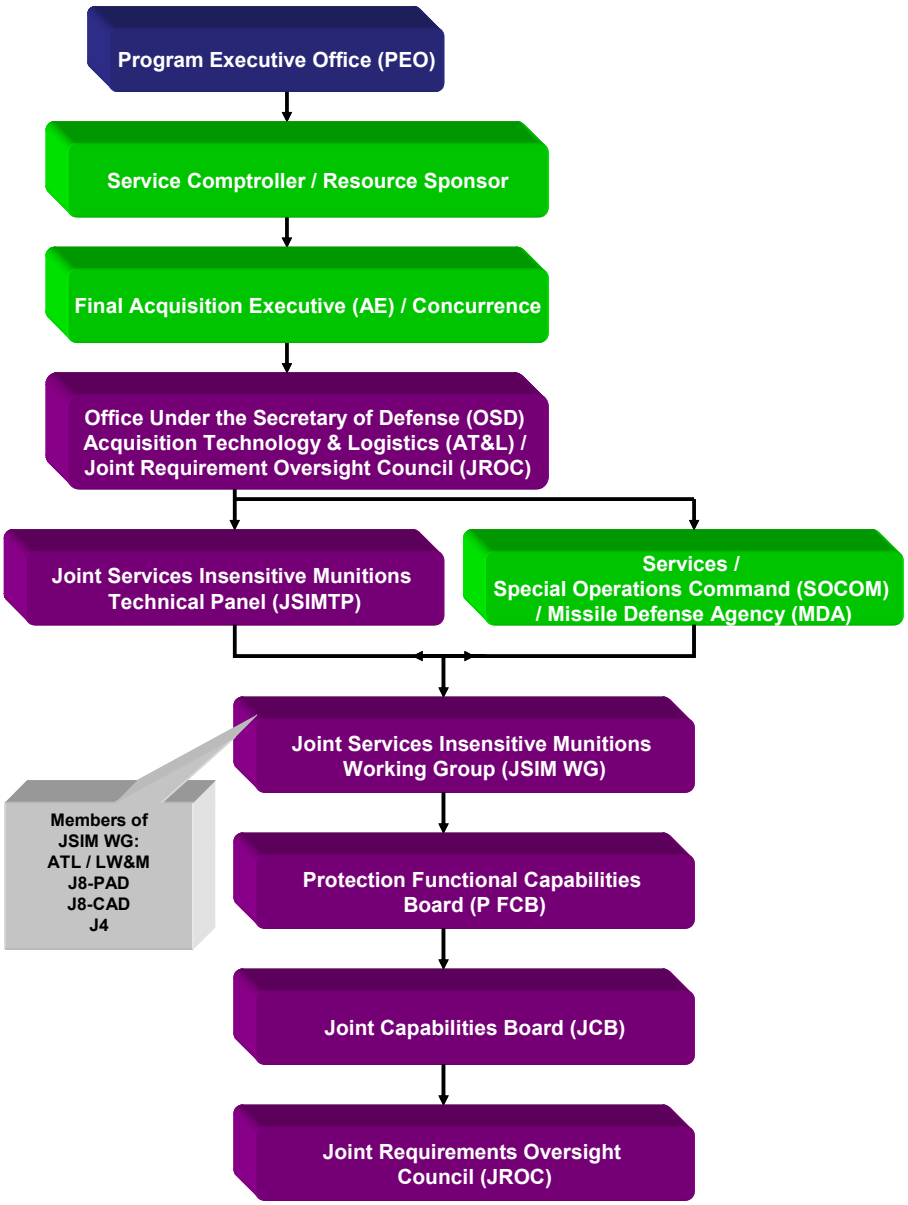

Figure 3-1. Organizations Involved in the IMSP Development/Review Process

DoD Directive 5000.1 and the OSD (AT&L) Memorandum dated 19 March 2007 require all reporting agencies and PEOs with munitions development and oversight responsibility to prepare IMSPs. This OSD (AT&L) memo provides guidance, including Business Rules, for preparation of an IMSP.

3.3 The Munitions Portfolio

A PEO starts the IMSP process by defining its munitions portfolio. The portfolio identifies all munitions (legacy and developmental) that the PEO/PM is responsible for, and prioritizes the PEO's resources toward those munitions in order to obtain the most return on investment while seeking IM compliance.

The PEO/PM may establish an IM Integrated Product Team (IPT) to oversee the development and execution of the portfolio, or may elect to utilize other management decision tool(s).

Upon completion, the portfolio should define each munition by Tier (e.g., I, II, II), along with the funding levels available and committed to the munition or system.

PEOs should intend to stage the most emerging munitions programs in Tier I (priority munitions programs that have fully funded POA&Ms) or Tier II (priority munitions program that do *not* have fully funded POA&Ms) for at least the first year of being identified as a priority munitions program.

Each PEO and Service should prioritize their munitions inventory and identify any/all IM deficiencies and technology development requirements.

The strategy for all PEOs and Services should be to focus resources on Tier I and Tier II programs, and then seek opportunities to transition proven or successful technologies into other (i.e., "Lower Tier") programs, while achieving incremental improvement across the inventory.

3.4 Plan of Action & Milestones

Another significant part of the IMSP process is the associated POA&M and the direct correlation between the milestones and the maturity level of the POA&M.

PEOs/PMs should recognize that each POA&M will be unique and specific to the munition addressed. Considerable time and effort will be required to develop, integrate and test each IM POA&M. See Appendix C for a template on how to write an IM POA&M.

PEOs and Services should continue to monitor POA&M execution, and review POA&Ms on a quarterly basis to ensure they reflect current program status.

There are no formal requirements for submission of POA&Ms for programs other than Tier I and Tier II at this time. Munitions programs throughout a PEO's or Service's portfolio have been characterized to identify similarities in materials, designs, descriptions and functionality. Through this strategy, lower priority munitions programs/projects will migrate to the priority list and benefit from the previous efforts by leveraging the top enhancements, Service technology collaborations, and lessons learned.

3.4.1 IMSPs and Technology Insertion

In an ongoing effort to obtain IM compliance, changes in direction should be expected, and are encouraged in order to advance the development of IM technology for insertion into munitions.

POA&Ms are developed and built upon ongoing IM efforts for munition programs by leveraging relevant technology thrust areas and Science and Technology (S&T) efforts. The technologies being developed will provide touch points for the remaining munition programs with potential solutions to their specific IM needs.

Programs with ongoing IM technology programs will continue until fruition, at which time they will be implemented, or their demonstrated technologies will be transitioned to other munition programs to maximize the leveraging of IM investments.

Biennial revisions of IMSP POA&Ms will determine technology insertion opportunities for IM programs.

3.5 IM Testing Standards

The IM testing standards are a single standardized set of IM tests and passing criteria developed by the OUSD (AT&L), and agreed upon during the JROC briefing held 21 September 2006. These testing standards can be found in Appendix B: JROCM 235-06, "Insensitive Munitions Standards and Passing Criteria," dated 6 November 2006.

The Joint Weapons Safety Technical Advisory Panel (JWSTAP) and the JSIMTP developed a position for the standardization of IM tests and processes to be applied across all Services. The process to implement these IM standardized tests and deviation processes is currently being developed by OUSD (AT&L) and the Joint Staff for Service/Agency concurrence.

All PEOs and Services, along with their respective project offices, are conforming to the established IM standards for newly developed IM test plans and IM assessments. These IM standardization test criteria are summarized in Figure 3-2.

Appendix B provides references for memorandums and policies governing Joint IM Test Standards.

IM Test	Test Set-up	Threat	Passing Criteria	Comments
FCO		Liquid Fuel Fire	Burning	HC Relation: Required for HC Stimulus: Rapid heating response Comments:
SCO		Slow Heating 3.3° C/Hr	Burning	HC Relation: Required for reduced HC Stimulus: Slow heating response Comments: Additional technical studies appropriate.
BI		.50 Cal M2AP 3 Round Burst	Burning	HC Relation: Required for reduced HC Stimulus: Low level kinetic impact Comments: Relevant small arms threat; more severe threats exist; additional studies appropriate.
FI		18.6 gm fragment 8300 +/- 300fps	Burning	HC Relation: Not required Stimulus: Combine shock, mechanical, thermal Comments: Artillery fragments slower; some KE and EFP threats more severe.
SD		Detonation of Single Donor	Explosion	HC Relation: Required for HC Stimulus: Output of a like munition Comments: Does not address mixed storage; or multiple donor.
SCJ		81mm Precision Shaped Charge	Explosion	HC Relation: Not required Stimulus: Shock Comments: More severe threats exist; pragmatic threat considering technology potential.

Figure 3-2. IM Standardization Test Criteria (Fold-out)

3.6 IMSP Review Responsibilities

The JSIMTP under direction from the OUSD (AT&L), reviews all PEO and Service IMSPs.

3.7 IM in Acquisition

The ultimate objective when making IM design decisions on munitions is to develop and field munitions that have no adverse reaction to selected accidental and combat threats.

All munitions and weapons, regardless of Acquisition Category (ACAT) level, shall comply with IM (unplanned stimuli) criteria and use materials consistent with safety and interoperability requirements.

The JCIDS process may validate variations to established Joint IM standardized testing protocols for unique circumstances.

To assist in assessing/developing IM strategy, Acquisition Templates can be found in Appendix D. A listing of related definitions can be found in Appendix E.

3.7.1 Service Implementation Instructions for IM

Following is a brief overview of how the Services interpret and implement their respective IM acquisition projects and comply with relevant DoD directives. Service IM Points of Contact information can be found in Appendix F.

3.7.2 US Army

Army acquisition policy can be found in Army Regulation (AR) 70-1 (31 December 2003). AR 70-1, in concert with Department of Army (DA) Pamphlet (PAM) 70–3, details the

Army's acquisition policies for programs in ACATs I through III (Paragraph 3–2). This regulation assigns responsibilities to Army organizations in accordance with DoDD 5000.1 and DoDI 5000.2. The Army will apply the direction contained in DoDD 5000.1 and DoDI 5000.2 to all acquisition programs, while streamlining and tailoring the procedures within statutory and program requirements.

The Army's procedures for implementing IM policies can also be found in DA PAM 70-3, Appendix XXV. The following excerpt from DA PAM 70-3 is referenced in Appendix G.

"The planning and execution of an IM program plan shall be initiated at the start of a munition acquisition program and continue through production/ fielding of the munition. Early and frequent coordination with the Army Insensitive Munitions Board (Army IM Board) is essential to insure that IM Program elements are adequately addressed and munitions acquisition is not adversely impacted."

The Deputy for Acquisition and Systems Management in the Office of the Assistant Secretary of the Army (Acquisition, Logistics and Technology) (ASA (ALT)) is the Army's Executive Agent for IM (AEA-IM).

US Army PEOs submit their IMSPs to the ASA (ALT) Missile Systems and Ammunition Directorate. The SAAL-SMA directorate supports the AEA-IM and staffs the PEO IMSPs within the Headquarters, Department of the Army, and with the Army IM Board before senior Army leaders endorse the Army's consolidated IMSP submission to OUSD (AT&L). US Army PEOs are also encouraged to pre-coordinate their IMSPs with the Army IM Board before submitting them to ASA (ALT).

3.7.3 US Navy

US Navy IM policy is established in Chief of Naval Operations (OPNAV) Instruction 8010.13D (16 August 2006). Significant policy statements from the current instruction are excerpted below. A more detailed listing of the policy is provided in Appendix H.

"All Naval munitions, without regard to ACAT level or source of origin (i.e., new procurement of legacy system, R&D programs, Product Improvement Programs (PIPs), Non-Developmental Items, etc.) shall be designated to meet IM requirements, as specified by Commander, Naval Sea Systems Command (COMNAVSEASYSCOM) governing instructions. Operational capabilities must be attained without compromising system and platform safety. IM shall be integrated using a system safety approach (i.e., energetic materials, case and container design configuration, etc). Achieving IM compliance is not to be viewed as a one-time process for a program. This must be viewed over the program's entire life cycle. DoD acquisition policy specifies evolutionary acquisition strategies as the preferred approach to satisfying operational needs. Spiral development is the preferred process for executing such strategies. IM consideration must be included in the windows of opportunity that match available technology and resources, thus enabling the evolutionary acquisitions strategies.

IM compliance shall be addressed at all milestones reviews for munitions programs. The ultimate objective is to design and deploy munitions that have no adverse reaction to unplanned stimuli.

The Navy's IM policy extends to all munitions, regardless of the source of design or manufacture, which are used, stored or transported aboard US Navy ships, weapon platforms, weapon carriers, and munitions held at Naval shore activities. Effort will be made with other Services to ensure maximum compliance with the provisions of the references."

3.7.4 US Air Force

The AF requirement for IM will be addressed in AFI 63-101, Acquisition and Sustainment Life Cycle Management, currently in final coordination. The draft AF instruction cites Title 10, the CJCS 3170 series, and the DoD 5000 series with respect to IM and will instruct program managers to ensure that all munitions meet IM criteria. The proposed AF pamphlet to accompany the instruction, AFPAM 63-128, *Guide to Acquisition and Sustainment Life Cycle Management*, will provide implementation guidance.

In the interim, the AF has been operating under an acquisition memorandum (05A-004, "Establishment of an Air Force Insensitive Munitions Policy," 12 October 2005) from the Office of the Assistant Secretary of the Air Force (Acquisition) [SAF/AQ].

Associated with the acquisition memorandum is a (draft) AF IM Management Plan that describes AF procedures and organizational responsibilities for planning and carrying out an integrated AF IM program. The acquisition memorandum and the draft management plan will be updated and consolidated to support the propose AF pamphlet referenced above.

SAF/AQ is the IM Executive for the AF; the Director of Global Power Programs (SAF/AQP) serves as the AF executive agent for IM. AF PEO Weapons prepares and submits the AF IM Strategic Plan. The AF Deputy Chief of Staff for Strategic Plans and Programs (AF/A8) co-signs the plan with SAF/AQ.

The AF Non-nuclear Munitions Safety Board (NNMSB) and its IM Technical Working Group (IMTWG) serve as the AF IM technical advisory panel.

3.7.4.1 U.S. Air Force Policy

- Memorandum 05A-004, "Establishment of an Air Force Insensitive Munitions Policy," Office of the Assistant Secretary of the Air Force (Acquisition), 12 October 2005

- US Air Force Insensitive Munitions Management Plan (Draft), June 2005

- Charter, Insensitive Munitions Technical Working Group, Non-nuclear Munitions Safety Board, 6 September 2001

The acquisition memorandum, the draft management plan, and the IMTWG charter are provided in Appendix I.

3.7.5 US Special Operations Command

In December 2003, the US Special Operations Command (USSOCOM) established the USSOCOM IM Board. (The memorandum establishing the IM Board can be found in Appendix J.) This IM Board reviews all test plans and data for weapons, ammunition, and explosives that require IM review and approval. The Board will coordinate IM approvals or waivers with the Joint Staff for final JROC approval.

The PM of a new weapon or ammunition must submit a copy of the acquisition documentation (e.g., Initial Capabilities Document [ICD], Test and Evaluation Master Plan [TEMP]) to the IM Board. The documentation must include a complete weapon description, including the configuration of components containing energetic material, such as warheads, rocket motors, cartridges/propellant activated devices, and fuzes. The acquisition documentation must also include IM requirements and plans.

The PM is responsible for IM test planning and should develop IM test plans in accordance with Military Standard (MIL-STD) 2105C. The PM should submit a copy of the test plan to SOF Warrior (PEO-SW) and the USSOCOM IM Office (IMO).

The full IM waiver package for each munition will be staffed for approval by the Chairman to the USSOCOM IM Board. The Program Executive Officer, SOF Warrior (PEO-SW) is designated as the IM Board chairman.

The ICD TEMP will be included in the USSOCOM IMSP for JROC approval. Out-of-cycle waivers will be processed through the USSOCOM IM Board, sent to the JSIMTP for review, and sent to the JROC for out of cycle approval.

3.7.6 Missile Defense Agency

The Missile Defense Agency (MDA) has established an IM Board to accomplish the coordination of IM technical and programmatic matters within the MDA and among collaborating DoD Services. The MDA IM Board charter is provided in Appendix K.

4. Tools of the Trade

4.1 Preparing an IM Threat Hazard Assessment

For the purpose of this Handbook, the application of the Threat Hazard Assessments (THAs) has been reduced to its role within the IM process (hazard classification and compliance testing) and thus will be referred to as the IM THA. The actual THA addresses broader areas of the system, to include munitions, and exceeds the scope of this document.

IM Threat Hazard Assessments (THAs) are generally conducted by PMs and munitions developers to determine the adequacy of IM tests as referenced or specified in MIL-STD-2105C.

If the assessment indicates an environmental hazard, or other threat(s) to the weapon system poses additional vulnerability problems, the IM tests are to be tailored to meet those requirements and provide a rationale to support the assessment.

The objective of an IM THA is to identify, characterize, and select the most credible threats that may occur from potential enemy, accidental, or collateral actions.

The identified threat characteristics are compared to the baseline IM test requirements as defined in Section 4.2, Test Plans.

An IM THA can also be used for initial assessment of effects that design modifications might have on mitigating both the sensitivity of a munition to threat stimuli, and the violence of its response to them. An IM THA is modified as munitions systems progress through development. An IM THA should include the following information:

- ***System Overview*:** Includes component descriptions and energetics.
- ***Life-Cycle Profile***: A cradle-to-grave sequence description of a munition, which should include details on logistic configuration(s), transportation method(s), storage configuration(s), fielded configuration(s), and any system specific considerations.
- ***Threats*:** Identified unplanned stimuli that may present a credible threat to the munition, and the part of the life cycle in which the threat is present.
- ***Munition Reaction*:** Known and/or expected reaction of the munition to the threats identified, including potential collateral damage to platforms, personnel, and adjacent munitions from these reactions.
- ***IM Tests*:** Recommendations about the types of tests to be conducted in order to establish the IM characteristics of the munition item. This element should specify munition configuration and applicable test threat, and define component and/or full scale tests, as well as any engineering or screening type tests that would be beneficial.
- ***Solutions:*** Identification of technologies that have the potential to improve the IM characteristics of a munition item.

Once an IM THA has been developed, it must be submitted to the appropriate service review organization(s) for approval. Table 4-1 reflects the organizations to which each IM THA should be presented. Other IM related activities can be found in Appendix F.

Service	Review Board	POC	Email
Army	AIMB	Dr. Brian Fuchs	Brian.edward.fuchs@us.army.mil
Navy	Navy IMO	Mr. Don Porada	Don.parada@us.navy.mil
Air Force	AF IM Technical Working Group (IMTWG)	Mr. Stephen Struck	mailto:stephen.struck@eglin.af.mil
USMC*	PM, Ammunition	Mr. Scott Allred	mailto:scottie.allred@usmc.mil
SOCOM	IM Board	Dr. Carl Campagnuolo	drccamp@msn.com
		Mr. William Andrews	williams.andrews@socom.mil
MDA	IM Board	Ms. Stephanie Wacenske	Stephanie.wacenske@mda.mil
**Note: All Marine Corps IM Requests will be coordinated through PM Ammunition.*			

Table 4-1. DoD Service IM THA Review Boards

4.2 Test Plans: Efficiencies of Combining IM/Safety/Hazard Classification Tests

It is important to coordinate planned testing with the appropriate Service and Joint reviews board. These boards are composed of IM experts, and can offer insight, direction, and guidance for development of IM THAs and test plans. Common tests are used to assess munitions with respect to:

- **IM compliance -** tests are used to assess a munitions' reaction to fast cook-off (FCO), slow cook-off (SCO), shaped charge jet (SCJ), sympathetic reaction (SR), bullet impact (BI), and fragment (FI) stimuli tests
- **Hazard Classification (HC) assignment -** tests are used to classify munitions for transportation and storage purposes
- **System safety, suitability, vulnerability and/or survivability -** specific tests are used to assess munition safety, suitability response, and/or system vulnerability such characteristics.

To make best use of limited resources and avoid test redundancy, test planning should be addressed in one coordinated test program document.

Along with coordination with appropriate Service and Joint review boards, HC aspects of test plans should be coordinated through the Joint Hazard Classifiers to the Department of Defense Explosives Safety Board (DDESB) for review and approval in accordance with TB 700-2.

The goal of the IM initiative and the resulting policy is to ensure that the development, ownership, handling, storage and transport of munitions containing energetic materials reliably fulfill

intended performance, readiness and operational requirements on demand. This coincides with the goal of the minimal probability of an inadvertent initiation and subsequent collateral damage to weapon platform, logistic system or personnel when subjected to unplanned stimuli.

In this context, energetic materials are "explosives," a term that, in United Nations (UN) parlance, includes high explosives, rocket propellants, gun propellants, and pyrotechnics. The IM tests mandated by the DoD provide specific and acceptable levels of reaction in response to each of the six test stimuli. Each test and its passing criteria are defined below in Figure 4-1.

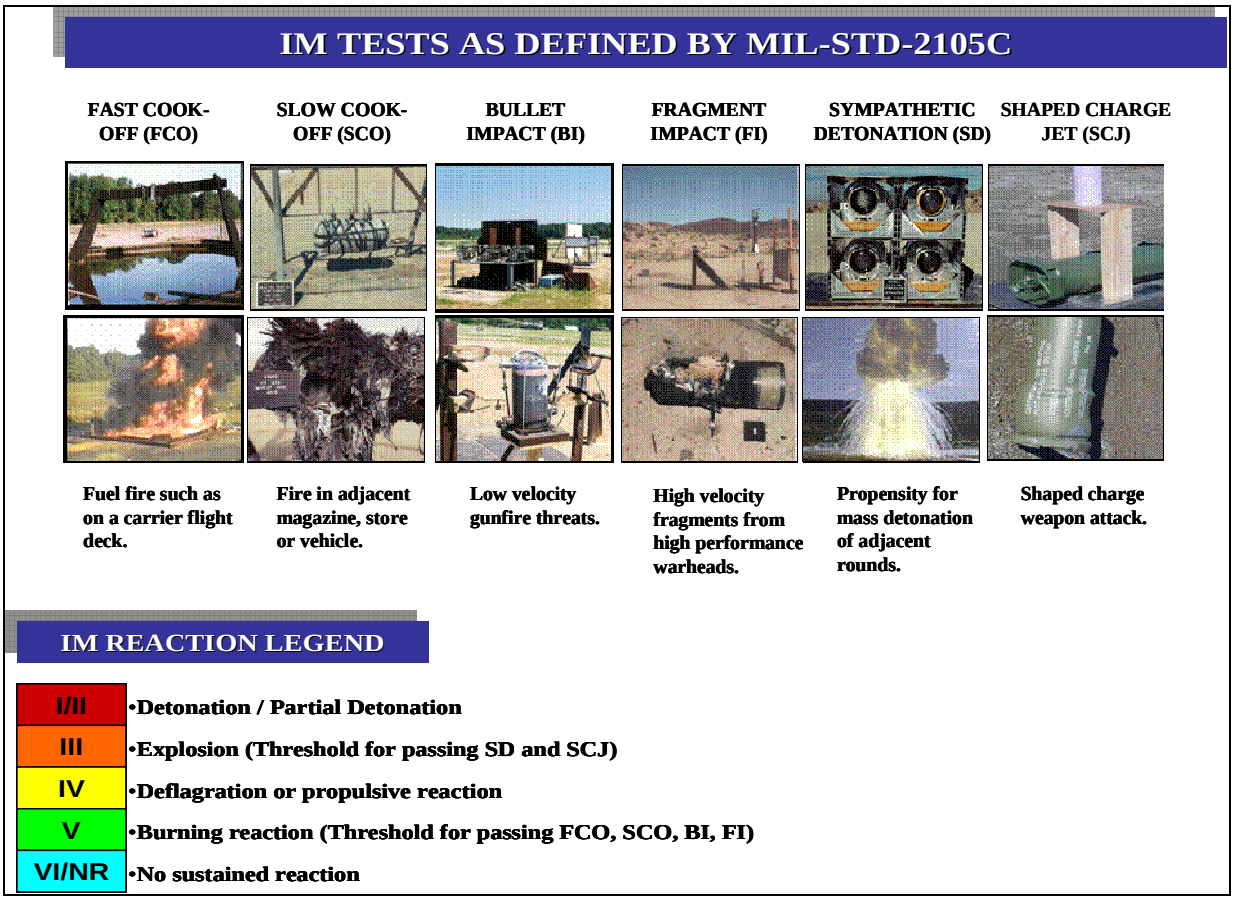

Figure 4-1. IM Tests as Defined by MIL-STD-2105C

These tests are described in MIL-STD-2105C (Military Standard, Hazard Assessment Tests for Non-Nuclear Munitions, 14 July 2003). The tests impart stimuli of such high level that they are expected to result in combustion reactions of the energetic material in most items. It is the objective of the IM initiative to make those reactions as non-violent as possible.

In general, most allied nations follow the US test protocols and response levels quite closely in their respective national IM programs. The Munitions Safety Information Analysis Center (MSIAC) acts as an international coordinator for this subject area, in accordance with STANAG-4439, Edition 2 (Introduction, Assessment and Testing of IM). Guidance is provided by Allied Ordnance

Publication AOP 39 (Edition 2), (Guidance on the Development, Assessment, and Testing of Insensitive Munitions, (MURAT), June 1997), which supplements STANAG-4439, Edition 2.

In other safety-related tests required by MIL-STD 2105 (e.g., vibration, thermal and humidity cycling, drop tests), no reaction of the energetic material is allowed, as the munition must be able to function as designed. Therefore, due to the difference in expected testing outcomes, these test requirements are not customarily addressed in an IM THA.

4.2.1 Using Engineering Assessment Versus Testing to Predict IM Performance

Engineering assessments, rather than testing of assets, may offer an economic advantage in the prediction of IM performance.

Many items with a minimal amount of explosive or propellants (0.5 pounds or less) can readily be compared to similar items exempt from IM testing, such as Cartridge Actuated Device (CADS)/Propellant Actuated Device (PADS)/Small Arms.

Full-scale testing is required for larger munition systems containing a Net Explosive Weight (NEW) greater than 0.5 pounds.

A PM may conclude that a warhead or rocket motor is likely to fail an IM test, based on previous test results from other munition systems that have similar confinement, energetic materials, and threat scenarios. With that in mind, conducting tests could be economically irresponsible as such tests would inevitably have negative outcomes. In this case, the PM and approving IM office may consider utilizing an engineering assessment.

Well conceived test plans are essential to a successful IM test program. The more effort devoted to the planning stage, the greater the likelihood of a desired outcome. The starting point for any IM test is the relevant test references and STANAGs. When a contract references a particular document, which may have been current at the time the contract was placed, IM support personnel must make sure that any subsequent editions issued before testing takes place will apply and that testing parameters are adjusted to reflect the latest revision.

4.2.1.1 Details to be Included in IM Test Plans

IM test plans should include the following elements (See Appendix D for more detailed guidance on the content of each element.):

- Introduction
- Testing Objectives
- Test Description
- Safety
- Security

- Data Analysis (Describe how the data will be used to determine pass or fail)
- Test Facility
- Test Setup
- Testing Schedule
- Test Item Configuration (Describe quantities, live/inert, packaging, orientation)
- Initial Inspection Procedures
- Post-test Requirements
- Threat and Hazard Assessment Summary
- Interim Hazard Classification
- Capability Document.

4.2.1.2 Details to be Included: Test Information

Test information should include the following:

- Test description
- Test procedure
- Instrumentation
- Test equipment (if applicable)
- Pass criteria
- Supporting documentation
- Required date(s) of IM Board approval of test plans.

4.3 Test Reports

This section presents the essential elements of an IM test report. The precise format may vary depending upon the requirements of the Service IM Board, and the standard procedures of the test facility. The elements listed are the minimum and should include the following:

- ***Executive Summary*:** A one-page summary describing the test and concluding with an initial assessment of the response.
  - Introduction:
  - Background giving reason(s) for test, test sponsor, place and date of test, test procedure
  - Aim and Objectives of test
  - Test Officials
  - List of those attending the test
- ***Test Equipment*:** Identify all equipment used for the test. This will typically include:
  - Explosive stores, design standard, details of any inert components and packaging with diagrams and photographs of the test items before test

  - Exploded diagram of the packaged store (for packaged tests, to show packaging configuration and internal furniture)
  - Ancillary equipment (e.g., firing device for bullet and fragment impact)
  - Firing/Initiation System (e.g., detonator or shaped charge jet warhead to initiate donor in Sympathetic Reaction)
  - Instrumentation - list of all instrumentation used.
- **Detailed Test Procedure:**
  - Test Configuration describes the test site and layout of test item, including test stand and method of fixing test item to the stand, and instrumentation. It is essential to include a diagram showing test arena, location of test item, position of witness plates, blast screens and similar devices, and all instrumentation with relevant distances. Include color photographs of the test set up to show both general arrangement and close up details of the test item and how it is mounted.
- ***Calibration:*** Include details of any calibration tests (e.g., achieving correct impact velocity and impact location for bullet and fragment impact).
- ***Safety Measures:*** Include details of range safety measures taken to protect personnel.
- ***Results:*** Describe the test in detail, including a diary or time log of events where appropriate (e.g., fast and slow heating). In particular, describe the reaction of test item to include:
  - Details of all instrumentation measurements, temperature records and blast overpressure records
  - A debris map identifying all ejected debris, location and distance from test position
  - Photographs of the pretest, post test and debris (includes crater damage, witness plates and screens) are required. Label each photograph to clearly identify the subject; specifically the precise nature and distance the debris landed within, or outside of the arc. Note: If the test has been conducted in the packaged configuration, and the lid of the container remained affixed to the package, include the internal photographs with the lid removed. However, remember to indicate whether the lid was removed post-test. Include any post-test X-ray photography to determine condition of test items.
  - Video or motion picture coverage. For video or motion picture coverage, utilize professional quality footage and do not edit the resulting footage. Ensure that the means chosen (quality, speed, type) will adequately capture the reaction event so that a detailed analysis can be conducted. For normal speed video coverage, use a frame rate of 18 to 30 frames per second include synchronous sound recording. For high speed motion picture coverage, use a minimum frame rate of 400 frames per second, or as required by the test plan. The sympathetic detonation test should be recorded using high speed motion picture cameras capable of photographing 32,000 images per second, minimum, or as required by the test plan.
- ***Meteorological Conditions:*** Record the relevant prevailing weather conditions at the time of the test (e.g., wind speed, temperature).
- ***Disposal of Explosive Items:*** Include a brief statement of how the explosive test items were disposed.

- ***Conclusions:*** A short summary of the results of the test, and an initial assessment of the reaction Type, including the rationale for the assessment.

References: The report should always include test directive and test procedure references (e.g., test STANAG).

4.4 Preparing IM Test Results

Reaction type tables are often used in determining and interpreting IM test results. Used in conjunction with stoplight charts, reaction type tables (examples of which are provided as Figure 4.2 and Figure 4.3) can assist in illustrating the results of munitions tests, prior to insertion into the test report.

Test interpretation guidelines are codified in AOP 39 (Edition 2), "Guidance on the Assessment and Development of Insensitive Munitions." Official interpretation and scoring of test results should be conducted by an approved IM board, identified in Appendix F. Table 4-2 defines the various IM reaction types.

Entries for FCO, SCO, BI, and FI tests should contain only a numerical representation, and its accompanying color code; whereas the results for SD and SCJ are to contain the appropriate "P" or "F" designation. Parentheses are used ( ), where applicable, to differentiate assessed reactions (F); from actual test results "F".

Table Values		Reaction Type	Color
Tested	Assessed		
I	(I)	Detonation	Red
II	(II)	Partial Detonation	Red
III	(III)	Explosion	Light Orange
IV	(IV)	Deflagration	Yellow
V	(V)	Burn	Bright Green
VI	(VI)	No Sustained Reaction	Turquoise
P	(P)	Pass (SD & SCJ)	Bright Green
F	(F)	Fail (SD & SCJ)	Red
THA		Determined not to be a credible threat per approved Threat Hazard Assessment.	No Color
NT		Not Tested - Applicable only to the baseline section.	No Color
Reaction types are defined in MIL-STD-2105C.			
Colors correspond to the MS Office® color palette.			
Note: ( ) denotes assessment.			

Table 4-2. Reference Chart for IM Reaction Type

Table 4-3 illustrates the scoring characteristics and the colors associated with reaction type test results.

Score Characteristics	
I/II	**DETONATION / PARTIAL DETONATION**
Intense shock, large craters and blast pressure, damage to nearby structures.	
III	**EXPLOSION**
Large fragments, fire/smoke hazard, blast and damage to nearby structures, possible minor craters.	
IV	**DEFLAGRATION**
Non-violent pressure release, no fragmentation, possible projection of covers, no blast damage.	
V	**BURN**
Burning, non-propulsive possible non-violent case rupture, melting, no fatal debris beyond 50 ft.	
VI	**NO SUSTAINED REACTION (Unofficial)**
No sustained combustion, smoking or brief combustion, almost all energetics remain.	

Table 4-3. Reference Chart for Score Characteristics

5. Request for Out-of-Cycle IM Procurements

5.1 Purpose of Out-of-Cycle IM Procurements

5.1.1 Meet Emergent Operational Requirements

The purpose of an out-of-cycle procurement request for non-IM compliant munitions is to request and document Joint Staff approval for a Service to acquire and field a munition or system not addressed in the current IMSP that requires immediate procurement prior to the next IMSP cycle.

5.1.2 Acceptance of IM Test Failures

An out-of-cycle procurement request may also be used when a munition system has failed to successfully pass all required IM tests. IM test failures reflect potential safety and survivability shortcomings, and increase the severity of the threat posed to combat and logistics systems. Consequently, accepting these shortcomings must be approved through the requirements process, prior to acquisition of the system.

Procedures have been established to ensure that documentation is developed for systems that fail one or more required IM tests, and that said documentation is reviewed for technical adequacy, and staffed with and/or by the appropriate organizations.

5.2 Development/Review of Out-of-Cycle Procurement Requests

A request for an out-of-cycle procurement for non-IM compliant munitions is processed only after all other elements of the IM program have been executed, efforts to develop and acquire an IM-compliant system have failed, and the responsible organization has determined that the need to field the non-compliant system outweighs the negative impacts of fielding such a system.

Figure 5-1, on the following page, depicts the chain-of-command review process for an out-of-cycle procurement request for non-IM compliant munitions.

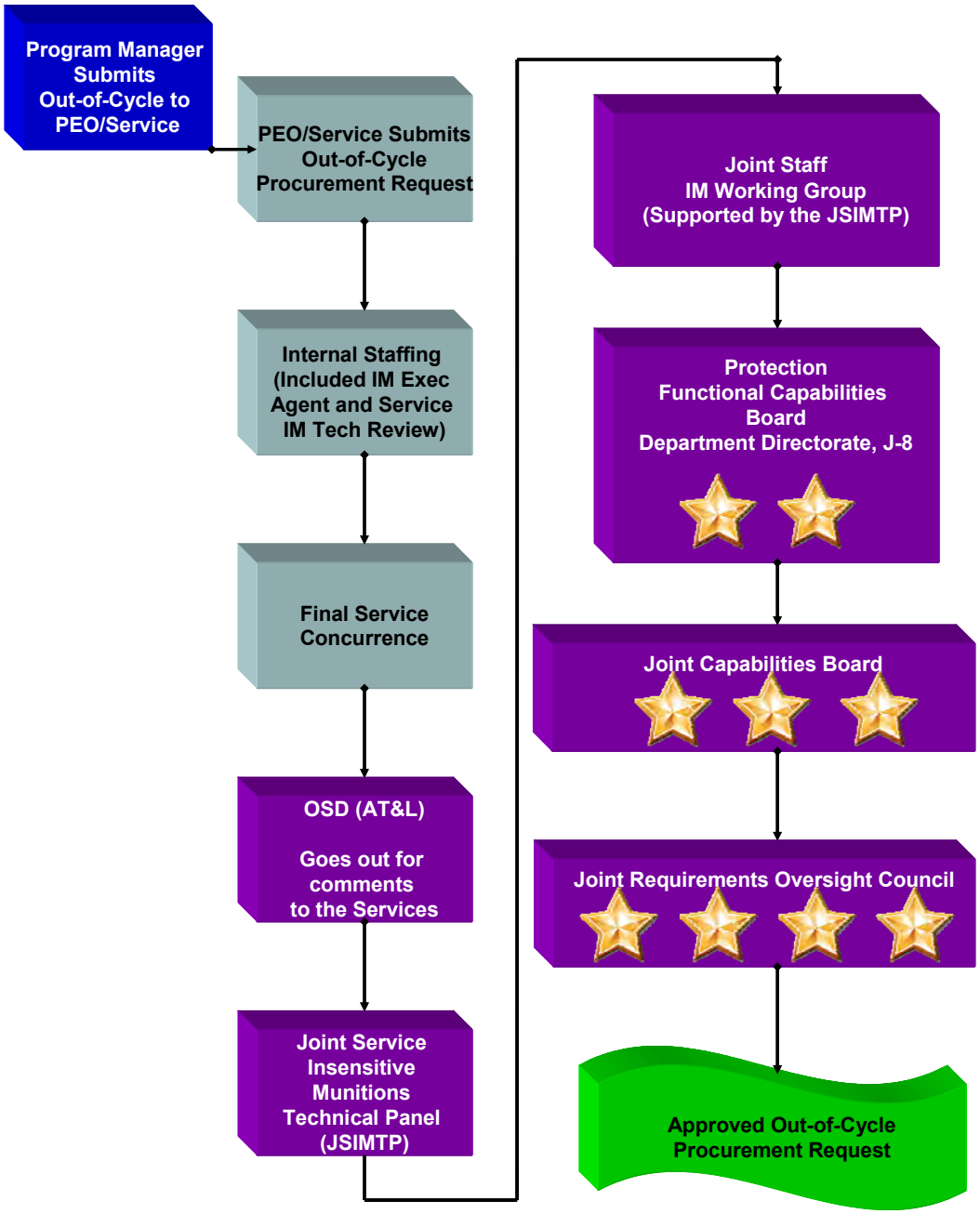

Figure 5-1. Out-of-Cycle Waiver Request Process

The following bullet points summarize the chain-of-command review process for an out-of-cycle procurement request for non-IM compliant munitions.

- **Step 1:** An out-of-cycle procurement request for non-IM compliant munitions is prepared by the PM.
- **Step 2:** The draft request is coordinated at the working level with the designated Service/Agency IM Board for informal review, which then coordinates with the JSIMTP for further recommendations.

- **Step 3:** Recommendations from these collaborations are provided to the PM to aid in the completion of the formal out-of-cycle procurement request.
- **Step 4:** The formal out-of-cycle procurement request is developed and forwarded by the PEO/PM to the Service's IM Executive Agent for Joint Staff review.
- **Step 5:** The Executive Agent provides the request to the Service/Agency IM Board for technical review and recommendations. IM Board recommendations are provided to the Service IM Executive Agents within 30 days after receipt of such requests.
- **Step 6:** After the Service/Agency IM Board's technical recommendations are provided, the Service IM Executive Agent staffs the request with the appropriate elements, obtains the Acquisition Executive Agent's concurrence, and forwards the request through the appropriate channels for Joint Staff technical review and JROC approval.
- **Step 7:** The purpose of the Joint Staff technical review is to advise the Joint Staff on the adequacy of the request. If there are no outstanding issues with the request, JROC approval may be granted. If issues exist, such as failure to incorporate appropriate technology, or lack of a POA&M for improvement, the submitter of the out-of-cycle procurement request may be required to revise the procurement plan(s) and waiver request.

6. Frequently Asked Questions

This section is composed of various questions and answers from test engineers, project managers, PMs, and Service IM Board members. The intent of this section is to answer frequently asked questions for those new to IM.

Q. What is IM?

A. Munitions that reliably fulfill their performance, readiness, and operational requirements on demand, and that minimize the probability of inadvertent initiation and severity of subsequent collateral damage to weapon platforms, logistic systems, and personnel when subjected to selected accidental and combat threats. (Reference: STANAG 4439, Edition 2)

Q. How did the requirement of IM come about?

A. That munitions vulnerability and violent reactions to unplanned stimuli have resulted in serious injury, loss of life, and destruction of property has been documented throughout history.

The formal requirement for the DoD to pursue IM was through the Senate National Defense Authorization Act of 2002, which contained a provision (Section 834) that required the Secretary of Defense to create a program that ensured munitions were resistant to unplanned stimuli.

The provision also required that a report to the Congress be submitted with the annual budget request. This report would identify all waivers, and the rationale for decisions granted under IM regulations, as well as identify all funding for IM programs in the current budget request. (Reference: Appendix A and Appendix B)

Q. What policies require a PEO or Service to comply with IM?

A. In addition to the preceding legislation, DODD 5000.1 states all systems containing energetics shall comply with IM criteria. The ultimate objective when making design decisions on munitions is to develop and field munitions that has no adverse reaction to unplanned stimuli. All munitions and weapons, regardless of ACAT level, should conform to IM (unplanned stimuli) criteria, and use materials consistent with safety and interoperability requirements.

The JCIDS validation process determines IM requirements and keeps them current throughout the acquisition cycle.

JROC Memorandum 235-06 (JROCM-235-06) states that the JROC concurred with the OUSD (AT&L) briefing detailing a proposed standardized single set of IM tests and passing criteria required for IM compliance executed by all Services.

Also, each Service is charged by DoD with developing implementing guidelines that address IM and the reporting thereof. (Reference: Appendix B)

Q. What is an IM Threat Hazard Assessment (THA)?

A. MIL-STD 2105C defines an IM THA as an evaluation of a munitions' life cycle environmental profile to determine the threats and hazards to which the munition may be exposed.

The THA should include an analysis of the munitions' life cycle; identify potential hazards, both qualitatively and quantitatively; the potential reaction of the munition to the threats; as well as any resulting collateral damage.

The IM THA should be updated as the exposure environment changes.

Q. Who approves IM THAs, test plans, and test reports?

A. The Service activities identified below are responsible for the review and approval of IM THAs, Test Plans, and Test Reports submitted by their respective constituencies. (Reference: Appendix G)

- Army Insensitive Munitions Board (Army IMB)
- Air Force IM Technical Working Group (IMTWG)
- Navy Insensitive Munitions Office (IMO).

Q. How is a test plan developed?

A. MIL-STD 2105C should be used to identify IM tests and test configurations/procedures. It contains tests and test procedures for the assessment of munition safety and IM characteristics of non-nuclear munitions. In addition, JROCM 235-06 calls for the use of a single set of standardized IM tests and passing criteria for use by all the Services. Specifically, JROCM 235-06 requires the detailing of a proposed standardized single set of IM tests and passing criteria required for IM compliance executed by all Services. Services are then expected to develop future IMSP submissions based upon the results of the revised standard IM tests. This directive applies immediately to IM testing and should be reflected in the FY 2009 IMSP submission.

Q. What are the criteria for a munition item to be classified as Tier I or II and, consequently, to require a POA&M?

A. Each PEO/PM is responsible for adhering to the established criteria and processes by which they prioritize all munitions and/or items within their IMSPs.

All items deemed as "priority munitions" should be placed in either Tier I or Tier II.

In addition, all items categorized as "developmental items" should be categorized as Tier I or Tier II priority munitions. (Reference: Appendix B)

Q. What if there a PEO has no planned munitions procurements, but is responsible for developmental munition items?

A. As soon as a material solution containing energetics is selected to meet an established requirement, the PEO managing that item should include it in the list of priority items as a Tier I or Tier II item.

The item should remain a developmental item until it reaches Milestone "C," at which point the PEO may re-prioritize the item based on established criteria. (Reference: Appendix B)

Q. What documents should be referenced in developing a POA&M/IMSP?

A. At a minimum the following documents should be referenced in developing a POA&M and IMSP: (Reference: Appendix B)

- Service Implementing Instructions
- DoDD 5000.1/DoDI 500.2, The Defense Acquisition System - This Directive reissues DoDD 5000.1, "The Defense Acquisition System," and authorizes publication of DoDI 5000.2, "Operation of the Defense Acquisition System." DoDI 5000.2 provides management principles and mandatory policies and procedures for managing all acquisition programs. (Appendix B)
- MIL-STD-2105C – This document describes IM Tests and reference NATO STANAGs used for the assessment of munition safety and IM characteristics of non-nuclear munitions. This document is used primarily for the assessment of explosive safety and identification of Joint Service Requirement for Insensitive Munitions (JSRIM) and NATO STANAG IM Test requirements. (Appendix B)
- CJCSM 3170.01C, Operation of the Joint Capabilities Integration and Development System (JCIDS) - The manual sets forth guidelines for operation of the Joint Capabilities Integration and Development System (JCIDS) regarding development and staffing of JCIDS documents in support of CJCSI 3170.01F. (Appendix A and Appendix B)
- OUSD IM Strategic Planning Policy Memorandum (July 2004 and March 2007) - These cornerstone memoranda mandate that IM program managers submit a strategic plan to both the JROC and OUSD (AT&L). Originally, plans were to be submitted on an annual basis, but

this requirement was later revised to biennially in the 2007 memo. The 2007 memo also lists new definitions and acronyms, business rules for IM acquisition and a template for program POA&Ms. (Appendix B)

- Insensitive Munitions Strategic Planning - July 2004
- Insensitive Munitions Strategic Planning - March 2007
- If applicable, OUSD IM Compliance documentation (Appendix B)
- Exemption of Existing Inventory Items to Insensitive Munitions Requirement 26 Jan 1999
- Insensitive Munitions Compliance for Small Arms 3 Jul 2001
- Insensitive Munitions (IM) Compliance for Cartridge Actuated Devices and Propellant Actuated Devices (CAD/PAD) 10 Oct 2003.

7. Lessons Learned: Building the "Perfect" Insensitive Munitions Strategic Plan

Since 2004, the IM community has been developing and fine tuning its IMSP process. As a result, the OUSD and the Joint Staff expect to see a maturation of PEO/PM and Service planning efforts manifested in each biennial IMSP submission. While a great start has been made, there are still areas that require additional attention across all the plans. These areas are addressed below, with recommendations for corrective actions.

7.1 Issue 1: PEO or Service Munitions Portfolio

Discussion: PEOs with large portfolios experienced difficulty identifying all of the individual items. In order to ease accounting, some used broad categories, or families, to capture large numbers of individual items.

The DOD IM leadership chose the use of individual items, thereby, making the continued use of categories/families counterproductive.

Recommendation: All PEO/PM baseline munitions portfolios count individual items at the Department of Defense Identification Code/Naval Ammunition Logistics Code (DODIC/NALC) level.

Avoid the use of categories/families, unless approved by the OUSD (AT&L).

Creating a munitions baseline is not a trivial task, but it is generally a non-recurring effort once the portfolio is established.

7.2 Issue 2: Business Rules Compliance

Discussion: The Business Rules were developed to provide PEOs/PMs with a standardized reporting baseline. There were varying degrees of compliance. The likely cause was the timing of the promulgation relative to the IMSP preparation process.

Recommendation: Stress to the Joint Service IM community the importance of maintaining the policy current after each JROC cycle, and that PEO personnel review the policy and ensure that IMSPs are prepared accordingly. The Services' respective IM agents should be contacted for clarification of any unresolved PEO issues.

7.3 Issue 3: Plans of Action and Milestones

Discussion: POA&Ms are the most important documents supporting the PEO's/PM's IMSP. The Joint Staff directed the JSIMTP to review POA&Ms to the same level of scrutiny and detail as it had for stand alone IM waivers in the past.

POA&Ms submitted as part of the FY 2007/FY 2008 IMSPs were not prepared to this level in all cases. As a result, PEO strategies were unclear, and in some cases, contradictory.

Recommendation: PEOs should submit their POA&M documents to the respective Service IM Boards review early, so that compliance with the POA&M format can be validated.

7.4 Issue 4: Inter-PEO Coordination

Discussion: Numerous munition items are required by one or more PEO(s), but procured by another. IMSPs and POA&Ms are required when these items are determined to be priority items (i.e., Tier I or Tier II).

An adequate description of the relationship and coordination among PEOs (procurement managers and users) was not described in all cases.

Recommendation: The inter-PEO relationships are strengthened by clear and complete documentation within the Program Management section of the IMSP to afford better coordination and assignment of responsibilities for munition items reported by a PEO that is not the Configuration Manager.

7.5 Issue 5: Unfunded Requirements

Discussion: IMSPs identify where unfunded IM requirements exist, but are not consistent in the detail of what is being done to resource funding shortfalls.

Reviewers expect more detail as to the PEO IM investment, and measures taken to resolve the unfunded requirements issues.

Recommendation: Particular attention should be directed toward resolving unfunded requirements. PEOs should be prepared to answer the question, "What was done to obtain the funding required to address IM issues?"

7.6 Issue 6: File Management

Discussion: The final, signed IMSP package needs to be forwarded in electronic format to OUSD (AT&L) PSA, LW&M. Adobe Acrobat® is the required software format. This application forms the most compatible relationship with the Joint Staff/J-8 Website.

Folders with multiple files cannot be uploaded to the site, so IMSP files need to be consolidated into one Adobe.PDF® file per IMSP.

Completed IMSP packages will be further distributed through Defense Systems and Technologies: Knowledge Online (DSTKOL).

Recommendation: Each IMSP must be submitted electronically via one Adobe .PDF® file.

7.7 Issue 7: IM Certifications

Discussion: IM certification is a long-standing process that has worked well for the Services for over two decades.

Draft policy recently staffed by the OUSD proposes creation of a Joint IM Test Standards and Compliance Assessment process and authority. Services/Agencies/USSOCOM will review IM test plans and test scores, and then submit recommendations to an as-yet-to-be determined authority for final approval of IM test plans and, ultimately, assignment of IM scores.

While the certification authority and the processes by which it should be achieved are undetermined, the term "certification" caused confusion and conflict with respect to the JCIDS process.

Therefore, the term "IM certification" will no longer be used. The term "IM compliance" will be used until it is either validated or replaced, when policy is finalized.

It is envisioned that items meeting the passing criteria will be determined as "IM compliant" when reviewed by the as-to-be-determined Joint adjudication body, eliminating the need for stand alone requests, except when required by urgent operational or programmatic necessity.

Recommendation: PEOs shall immediately adopt the standardized set of IM tests and passing criteria concurred with by the JROC into their respective munition test programs, and stand by for additional guidance on the review and adjudication process.

Appendix A: History of IM Programs and Policies

APPENDIX A: HISTORY OF IM PROGRAMS AND POLICIES

Appendix A.1 Historical Munitions Incidents

Throughout history, there have been countless examples of catastrophic losses from incidents involving munitions. Not all of these incidents have been the result of careless handling or at the hands of the enemy. Many incidents have been attributed to, and exacerbated by, the lack of technology or a lack of understanding as to why similar types of energetics react differently when subjected to stimuli, such as heat and impact. The collateral damage caused from these incidents has resulted in serious injury, loss of life, and damage to property.

The table below provides examples of some of the more significant munition accidents, in terms of lives lost and damage incurred, since the 1960s.

Location and Date	Description	Number of Casualties	Losses (Then-year $)
Bien Hoa Air Force Base, Vietnam 16 May 65	One of the first ammunition dumps destroyed during the war.	Undetermined	Undetermined
USS Oriskany 26 Oct 66	An actuated flare was thrown into a locker of 2.75" rocket warheads. A warhead detonated, spreading the fire and causing other detonations.	44 killed 156 injured	$10 million
USS Forrestal 29 Jul 67	A ZUNI rocket was fired accidentally from an aircraft striking another aircraft and causing massive fire. Nine bombs detonated spreading the fire below decks.	134 killed 161 injured	$182 million
USS Enterprise 15 Jan 69	Exhaust from an aircraft engine starter unit directed onto a pod containing four ZUNI rockets caused a warhead to detonate. Fragments ruptured the aircraft's fuel tank and ignited a fire. Three more ZUNI warheads detonated. The shaped charges blew holes through the flight deck allowing burning fuel to invade the lower decks.	28 killed 343 injured	$122 million
Danang Ammunition Dump, Vietnam 21 Apr 69	Secondary explosions destroyed an ammunition storage area.	Undetermined	Undetermined
Roseville, CA April 1973	A train loaded with bombs had just entered the yard in Roseville, CA, when a fire was observed in one of the boxcars. Before the fire department could react, a massive explosion demolished the boxcar and spread the fire. In the next few hours, 18 boxcars exploded in succession.	48 Injured	Property damage totaled $24 million

Location and Date	Description	Number of Casualties	Losses (Then-year $)
Benson, AZ 1973	The investigation of the Roseville train explosion was still in progress when 12 boxcars full of bombs exploded near Benson, AZ. Evidence found after the accident revealed that there had been a fire in one of the boxcars.	Undetermined	Undetermined
USS Nimitz 26 May 81	An EA-6B aircraft crashed during a night landing, erupting into a fuel fire. Once the fire was believed to be out, the order was given to start the clean-up. A SPARROW missile warhead that was buried in the debris detonated. The explosion re-started the fire, and three more warheads detonated before the fire could be extinguished.	14 killed 48 injured	$79 million
Camp Doha, Kuwait 11 Jul 91	A motor pool fire involved an M992 ammunition carrier loaded with 155-millimeter artillery shells that caught fire in the North Compound. An explosion spread the fire and caused a massive secondary explosion. The resulting series of explosions and fires devastated the vehicles and equipment in the compound and scattered unexploded ordnance and debris over much of the remainder of the camp. The Army lost more tanks in this incident than during the entire war against Iraq.	Three killed 49 injured	102 damaged and/or destroyed vehicles and in excess of $15 million dollars in damaged or destroyed ammunition.
Jalalabad, Afghanistan 10 Aug 02	Stored explosives were accidentally detonated at a warehouse for road-building projects. A heat wave –of more than 40 °C (100°F) over much of Afghanistan – may have triggered the explosion.	26 killed 90 injured	Undetermined
Spin Boldak, Afghanistan 28 June 02	According to the Afghan Minister of Interior (Taj Mohammed Wardak), a BM-21 rocket (122-mm Cal.) fired by unknowns hit a weapons depot and started a chain of reactions.	32 killed 70 injured	Undetermined
Camp Falcon, Iraq 10 Oct 06	Alleged insurgents shelled Ammunition Storage Facility with mortars and rockets, triggering massive explosions.	Alleged 300 killed 200 injured	Undetermined

Note: Above casualties and losses data was derived from public sources, official casualties and loss numbers may differ. Data is intended only to illustrate the estimated devastation that has been caused by mishaps.

Appendix A.2 DEPARTMENT OF DEFENSE IM POLICY IMPLEMENTATION

The rationale to design, develop, and deploy IM is based principally on the loss of life and damage to platforms during incidents experienced by the US military, its allies, and other nations, and is reflected via DoD policy initiatives identified below.

There is both a national and international drive by munition developers to reduce the vulnerability of munitions through the development of IM.

Simply put, the philosophy of IM technology is to design munitions that minimize collateral damage when they are exposed to unplanned stimuli, such as heat, fuel, or fire, or when they are subjected to impact, such as bullets and metal fragments.

Munitions incorporating IM technologies are less likely to react with other munitions, thus precluding the escalation and probability of collateral damage to personnel, platforms, and/or munitions stockpiles.

Munitions incorporating IM technologies not only have the potential to decrease the logistical footprint in munitions, but also the amount of support equipment and the number of security requirements for a forward-operating area ammunition supply point.

An insensitive munition will not detonate under conditions other than its intended purpose to destroy targets.

All munitions and weapons, regardless of ACAT level, should conform to IM (unplanned stimuli) criteria, and use materials consistent with safety and interoperability requirements. The JCIDS validation process determines IM requirements, and keeps them current throughout the acquisition cycle. Munitions insensitivity is validated per CJCS Instruction 3170.01F.

In this endeavor, the DoD has made significant strides in improving the performance, survivability, and interoperability of munitions. The DOD continues to stretch the technology envelope to develop IM compliant munitions fully capable of meeting or exceeding the Key Performance Parameters (KPPs) imposed through the Capability Development Document (CDD).

On June 5, 1997, the Office of the Under Secretary of Defense (Acquisition, Technology & Logistics) (OUSD (A&T)) established the US DoD IM IPT to address within the DoD IM policy, requirements, programs, and issues, nationally and internationally.

On May 4, 1999, OUSD (A&T) established the Joint Services IM Technical Panel (JSIMTP) to assist DoD offices with respect to IM technology matters. Specifically, the JSIMTP's responsibilities include:

- Providing technical advice/recommendations concerning IM technology to program Milestone Decision Authorities (MDAs), PMs, OSD, Joint Staff, and others
- Reviewing all munitions acquisition programs identifying IM science and technology (S&T) opportunities

- Maintaining a real-time, top-level management database on munitions and their IM technology status
- Advising the OSD on international IM matters
- Providing advice/recommendations on integrated IM and hazard classification testing
- Providing an annual assessment on the state of IM compliance of the DoD Munitions Inventory to the OSD Office of Munitions and the Joint Staff J-4.

In 2005, the Joint Insensitive Munitions Technology Program (JIMTP) was established. The JIMTP is a DoD-wide program to develop and mature technologies for improving the response of the DoD munitions portfolio to combat, terrorist, and accidental threats.

There are five Munitions Area Technology Groups (MATGs) focusing on a majority of the DoD priority IM shortfalls based on PEO IMSPs:

- (I) High Performance Rocket Propulsion
- (II) Minimum Signature Rocket Propulsion
- (III) Blast-Fragmenting Warheads
- (IV) Anti-Armor Warheads(V) Large Caliber Gun Propulsion.

The program funds and develops technology roadmaps in the advancement of the 6.2 and 6.3 Research & Development (R&D) efforts across the military Services to maximize DoD IM investments.

The list below is composed of other significant DoD milestones that have greatly influenced and advanced the development of IM technologies.

Department of Defense Policy Development Timeline
1987, Joint Ordnance Commanders Group (JOCG) MOA signed for joint requirements for IM
1994, Office of the Secretary of Defense for Acquisition, Technology and Logistics, OUSD (AT&L) Memorandum
1995, Joint Requirements Oversight Council (JROC) Decision Memorandum
1997, DoD Insensitive Munitions Integrated Process Team established
1999, Office of the Secretary of Defense for Acquisition, Technology and Logistics (OUSD) (AT&L) Memo, "Gansler Memo," "Exemption for Existing Inventory Items to IM Requirements"
July 2004, Office of the Secretary of Defense for Acquisition, Technology and Logistics OUSD (AT&L) Memo, "IM Strategic Planning." Establishes DoD policy for annual submission of IM Strategic Plans to the JROC and OUSD (AT&L)
May 2006, JROCM 076-06, JROC. Requests "OSD to establish a standardized single set of IM tests and passing criteria"
November 2006, JROCM 235-06. Establishes a single set of standards and need for adjudication process
January 2007, JROCM 005-07. Establishes a 2-year periodicity for IMSP submission
March 2007, Office of the Secretary of Defense for Acquisition, Technology and Logistics OUSD (AT&L) Memo, "IM Strategic Planning." Requires IMSPs to be submitted biennially beginning with FY 2009/FY 2010 plans. Also, includes additional guidance on the execution of IMSPs.

Appendix B: IM Policy Reference Documents

APPENDIX B: IM POLICY REFERENCE DOCUMENTS

Appendix B.1 Title 10, Chapter 142, Sect. 2389

IM acquisition planning and execution was enacted as law by this Congressional statute. Specifically, "The Secretary of Defense shall ensure, to the extent practicable, that insensitive munitions under development or procurement are safe throughout development and fielding when subject to unplanned stimuli."

Appendix B.2 DoDD 5000.1, The Defense Acquisition System

This Directive authorizes the publication of DoDI 5000.2, "Operation of the Defense Acquisition System," which provides management principles and mandatory policies and procedures for managing all acquisition programs.

Appendix B.3 CJCSM 3170.01C, "Operation of the Joint Capabilities Integration and Development System (JCIDS)"

The manual sets forth guidelines for operation of the Joint Capabilities Integration and Development System (JCIDS) regarding development and staffing of JCIDS documents in support of CJCSI 3170.01F.

Appendix B.4 Memorandum of Agreement On Establishment Of A Joint Requirement For Insensitive Munitions, September 1987

The document provided joint consensus of the military departments (Army, Air Force, and Navy) in the implementation of Joint Service Technical Criteria, the definitions for IM and directs each service to implement a system for the planning, funding, and execution of its IM efforts.

Appendix B.5 Joint Requirement Oversight Council Memorandum (JROCM) - 5 December 1988, Subject: "Insensitive Munitions Joint Requirement Revision"

The JROC reviewed subject revision and approved as submitted and recommended revisions be incorporated into the Joint Requirement as requested.

Appendix B.6 Joint Staff, Force Protection Functional Capabilities Board Chairman Memorandum of 22 March, 2005 Subject: "Insensitive Munitions Strategic Plan Review Guidance for Joint Service Insensitive Munitions Technical Panel (JSIMTP) Members"

This memorandum noted the JROC's and the OUSD's desire that the JSIMTP review and provide comments on each PEO's IMSP. Both entities want the JSIMTP's role in reviewing a PEO's entire IMSP to be expanded to include all technical aspects of the IMSP, and to ensure that all key elements have been addressed. These key elements include:

- General Overview of the IMSP

- Review of the PEO's portfolio and IM investment priorities
- Description of methodology
- Drawing of the priorities line
- Unfunded IM requirement
- POA&Ms.

Appendix B.7 **Joint Requirement Oversight Council Memorandum (JROCM) 235-06, dated 6 November 2006, Subject: "Insensitive Munitions Standards and Passing Criteria"**

The JROC received and concurred with the OSD (AT&L) briefing detailing a proposed standardized single set of IM tests and passing criteria required for IM compliance execution by all Services.

Appendix B.8 **Joint Requirement Oversight Council Memorandum (JROCM) 005-07, dated 4 January 2007, Subject: "DOD FY 2007–2008 Insensitive Munitions Strategic Plan"**

The JROC approved the DOD FY 2007–FY 2008 IMSP. It also approved the change to CJCSI 3170 eliminating Joint Capabilities Integration Development System Insensitive Munitions Certification; and changed the periodicity for IMSPs to two years starting with the FY 2009/FY 2010 IMSP.

Appendix B.9 **OUSD IM Strategic Planning Policy (July 2004 and March 2007)**

These two cornerstone memoranda, issued July 2004 and March 2007, mandate that IM PEOs submit IMSPs to both the JROC and OUSD (AT&L). Originally, IMSPs were to be submitted on an annual basis, but this requirement was later revised to biennial submissions in the 2007 memo. Also, the 2007 memo lists new definitions and acronyms, business rules for IM acquisition, and a template for IM program POA&Ms. See Appendix B.14 for the full text of the March 2007 memo.

Appendix B.10 **OUSD IM Compliance**

The following memos were issued by the OUSD to specific families of munitions that are assessed as IM compliant:

- Insensitive Munitions Compliance for Small Arms, 3 Jul 2001: (.50 Cal. and less without an explosive projectile or incendiary projectile-includes shotguns)
- Insensitive Munitions Compliance for Cartridge Actuated Devices and Propellant Actuated Devices (CAD/PAD), 10 Oct 2003: (Electric Initiated Devices; Delay Actuated Devices; Linear Explosive Devices; Explosive Gas/Laser/Mechanical Actuated Devices; and PADs less than 0.5 pounds Net Explosive Weight (NEW))

Appendix B.11 OUSD Clarification of JROC "Business Rules" for Tier Assignment, IM Investment, and IM Reaction for Insensitive Munitions Strategic Planning (IMSP) and Plan of Action and Milestones (POA&M) Development

The excerpts below are from clarification memos released by the OUSD to provide amplifying guidance for the ranking of munitions within a PEO's munitions portfolio, the reporting of IM investments, and presentation of IM reactions (baseline and future), and HC predictions.

Clarification Memorandum - Tier Assignments

- **Priority Munitions:** Each PEO is responsible for developing and documenting the criteria and process by which it prioritizes all munitions and/or items within its IMSP with regard to obtaining IM compliance for those items. All items deemed as "priority munitions" should be placed in either Tier I or Tier II. In addition, all items categorized as "developmental items" should also be categorized as Tier I or Tier II priority munitions.
- **Developmental Items:** As soon as a material solution containing energetics is selected to meet an established requirement, the PEO managing that item should include it in the list of priority items as a Tier I or Tier II item. The item should remain a developmental item until it reaches Milestone "C," at which point the PEO may re-prioritize the item based on established criteria.
- **Clarification on Documenting Developmental Items:** It is recognized that developing a formal POA&M on a developmental item is not entirely practical, depending of the level of maturity of the program. However, the planning process to incorporate IM technology into each item must begin early in the acquisition process, which includes Advanced Concept Technology Demonstration (ACTD)/Advanced Technology Development (ATD), and continues through System Development and Demonstration (SDD). An abbreviated POA&M or "slick sheet" is acceptable in lieu of a formal POA&M. At a minimum, the slick sheet should consist of an Executive Summary and Quad Chart. The PEO is expected to mature the program documentation commensurate with the program maturity.
- **Small Arms Ammunition:** In keeping with the guidance contained within OSD (AT&L) Memorandum, dated 3 July 2001; Subject: "Insensitive Munitions Compliance for Small Arms Ammunition," for the purpose of tracking munitions programs and reporting IM investment, small arms ammunition (.50 Caliber and smaller) including shotgun shells without an explosive projectile and/or containing Incendiary should be treated as a developmental/priority munitions programs until the program achieves Milestone C. PEOs responsible for small arms in this category will not be required to develop POA&Ms except under unique circumstances. However, a "slick sheet" should be developed at a minimum, and while in development small arms ammunition should generally be assessed to pass applicable IM tests. Notionally, these small arms ammunition items should be reported as Tier II. Small Arms Ammunition currently under development and any developed in the future with incendiary or high explosive projectiles should continue to have their IM compliance determined on a case ny case basic.
- **Insensitive Munitions (IM) Compliance for Cartridge Actuated Devices and Propellant Actuated Devices (CAD/PAD):** CADs/PADs in this category will not be required to develop POA&Ms except under unique circumstances. However, a "slick sheet" should be developed at a minimum and while in development they should be assessed based on applicable IM Tests reactions. Notionally, these CAD/PAD items in develop should be reported as Tier II. All other

CAD/PAD families (such as Rockets Catapults; PADs equal to, or greater than 0.50 pounds NEW; and Special Applications) currently under development, and any developed in the future shall continue to have there IM compliance determined on a case-case-basic as a part of the CAD/PAD qualification and certification process.

- **Tier I Items:** Items that are developmental and/or categorized as priority munitions utilizing the PEO's established and documented criteria and that have a fully-funded POA&M should be placed in Tier I. **Note:** The term "fully funded" means that funds are available, and/or there is a reasonable expectation that the required funding will become available to execute the program plan.
- **Tier II Items:** Items that are developmental and/or categorized as priority munitions utilizing the PEO's established and documented criteria and that do not have a fully funded POA&M, should be placed in Tier II. **Note:** The term "unfunded" indicates that requirements are identified, but there is no expectation that the required funding will become available to execute the program plan without higher headquarter's intervention.
  - There should be discussion within the POA&M addressing planned efforts to identify any unfunded requirements (UFR) and a statement as to whether or not a UFR exists.
  - If a UFR exists, it should be included within the POA&M, and discussed in detail within the IMSP, including actions taken and/or planned to secure necessary funding to permit execution of the POA&M.
  - If a UFR does not exist, it should be developed and included as supplemental data.
  - Clarification on Tier II Items: If a PEO has exerted maximum effort in seeking a solution to obtain IM compliance on a Tier I or II item, and existing technology does not exist to make the item fully IM compliant, the respective Service IM Board should be consulted. If the Service IM Board concurs that spending additional funding on that item is not in the best interest of the PEO or the DoD at that time, the program should remain as a Tier II item with an unfunded POA&M. The POA&M should reflect the reason for the decision and document the Service Board's concurrence. The PEO should review the technology during each IMSP submission cycle to evaluate new technology and annotate the POA&M accordingly.
- **Tier III Items:** Non-IM compliant, non-priority items that are configuration managed and procured by another PEO should be placed in Tier III. This includes items that are configuration managed and procured by the US Army Single Manager for Conventional Ammunition (SMCA), even if they are not being procured for use by the US Army.
- **Tier IV Items:** Non-IM compliant, non-priority items that are being procured or are expected to be procured by the reporting PEO. This should include legacy items that have a likelihood of being placed on a production contract during the Future Year Defense Plan (FYDP), even if they are not currently funded in the FYDP.
- **Tier V Items:** Non-priority items that are not expected to be procured by the reporting PEO. However, if the reporting PEO expects that an opportunity will arise in the near-term to insert IM technology into an item it should be considered for placement in Tier IV instead of Tier V.
- **Tier VI Items:** IM compliant, non-priority items that are configuration managed and procured by another PEO. This includes items which are configuration managed and procured by the US

Army SMCA, even if they are not being procured for use by the US Army. (This is the IM complaint equivalent of Tier III items).

- **Tier VII Items:** IM compliant, non-priority items that are being procured or are expected to be procured by the reporting PEO. This should include legacy items that have a likelihood of being placed on a production contract during the FYDP, even if they are not currently funded in the FYDP. (This is the IM complaint equivalent of Tier IV items).

Clarification Memorandum - Determining IM Investment:

The OUSD understands that the PEOs/PMs are in the best position to make the most accurate break-out of IM investments. This clarification memorandum provides amplifying guidance in the preparation of IMSPs and POA&Ms by providing a common framework for the reporting of IM investments among all the PEOs/PMs.

The memorandum identifies distinct categories for the break-out of IM Investment. Standardized tables were identified; Tables 8.1 and 8.2 (fully funded efforts) and 8.3 (unfunded or partially funded) with each table identifying Munition Program, Tier Level, Categorized IM efforts, and Projected IM Investment by Fiscal Year. Furthermore, the memorandum states that any funding presented in the IMSP or POA&M should be defendable and contain justification within subsequent paragraphs with appropriate reference to source and/or rationale and that no number should be expected to stand alone.

Clarification Memorandum - IM Reactions:

Use of Parentheses With Reaction Type: Reactions of munitions that have been formally tested to an approved test plan, using test procedures approved by the respective Service IM Board, and scored by that Board should not use parentheses. All other tests results, including those that were assessed based on an analogy to another program, should be shown in parentheses.

Predicted IM Reactions: These reactions should be predicted, based on the program's realistic expectations on what can be accomplished with available or expected technology insertion.

It has been noted that many programs show all current reactions as all Type "I" and "Fails," and predict all future reactions as Type "V" and "Pass" with little or no supporting text in the POA&M as to how that will be achieved.

While it is recognized by all in the DoD IM community that the goal is to become fully IM compliant, predicted IM reactions should reflect what is considered possible with existing technology and funding. All predicted reactions should be assessed based on the IM reactions expected to be achieved by applying the IM Standard Test Criteria.

Predicted Hazard Classification: Service hazard classification representatives should be relied on for predictions of future hazard classification (HC) assignments synchronized with predictions of IM reactions.

Application of Joint IM Test Standards: It is the policy of the JROC to use the Joint IM Test Standards for all future formal IM testing conducted by the Services and Agencies within the DoD.

The exception to this policy is near-term (less than six months) formal IM testing that has already been approved by the Service IM Board, based on a formal test plan that was approved prior to 1 October 2007.

While additional IM tests may be conducted based on Threat Hazard Assessment/program or Service specific applications, testing to the Joint IM Test Standards is required.

Once again, this policy applies only to future formal IM testing. The retesting of formal IM Baseline tests is not required.

Service Implementing Instructions: (See Service Appendixes: Appendix H, US Army Policy; Appendix I, US Navy Policy; Appendix J, US Air Force Policy; Appendix K, US Special Operations Command Policy; Appendix L, Missile Defense Agency Policy)

Appendix B.12 MIL-STD-2105C and Applicable STANAGs and Allied Ordnance Publications

- **MIL-STD-2105C:** Describes the IM tests, and references NATO STANAGs used for the assessment of munition safety, and IM characteristics of non-nuclear munitions. This document is used primarily for the assessment of explosive safety and identification of JSRIM and NATO STANAG IM test requirements.
- **STANAG 4240 (Edition 2): Liquid Fuel/External Fire, Munition Test Procedure:** Documents test procedures for assessing the reaction, if any, of munitions and weapon systems to heat variations that are typical of the fast heating likely to be generated by a large liquid hydrocarbon fuel fire. The STANAG also provides guidance on the selection between the Standard Liquid Fuel Fire Test and a Mini Fuel Fire Test.
- **STANAG 4241 (Edition 2): Bullet Impact, Munition Test Procedure:** Documents the test procedure for assessing the reaction of a munition to an impact from a three-round burst, .50 Cal. M2 AP projectile.
- **STANAG 4382 (Edition 2): Slow Heating, Munition Test Procedure:** Documents the test procedure for assessing the reaction, if any, of munitions and weapon systems to a gradually increasing thermal environment at a change rate of 3.3°C per hour.
- **STANAG 4439 (Edition 2): Policy for Introduction, Assessment and Testing for Insensitive Munitions (MURAT).** States the NATO agreement for the introduction of IM and lists the IM requirements, goals, and tests. US Ratification comment:

"Comments: Page 3, Para 11 – In national IM assessments the United States will conduct full scale tests, as appropriate, in accordance with the procedures listed in Annex A except if no reaction has occurred as 365°C is attained during slow heating testing per STANAG 4382 (Edition 2) procedure 1, the munition may be considered IM compliant. This approach furthers the harmonization of IM with hazard classification thus enabling the realization of lifecycle explosive safety management cost saving or avoidances when IM introduction efforts are deemed successful."

- **STANAG 4396 (Edition 2): Sympathetic Reaction, Munition Test Procedure:** Documents the test procedure to assess the potential for a munition to sympathetically react to the initiation of an adjacent munition.
- **STANAG 4496 (Edition 1): Fragment Impact, Munitions Test Procedure:** Documents test procedure to assess the reaction of a munition to mechanical threats; 18.6 gram fragmentation impact (8,300 +/- 300 fps).
- **STANAG 4526 (Edition 1): Shaped Charge Jet, Munition Test Procedure:** Documents test procedure for determining the degree of reaction, if any, of a munition when hit by a typical top attack bomblet shaped charge jet (81-mm precision shaped charge).
- **TB 700-2:** This publication sets forth detailed procedures for hazard classifying ammunition and explosives in accordance with Department of Transportation regulations, North Atlantic Treaty Organization guide lines, and United Nations recommendations.

Appendix B.13 Allied Ordnance Publications

- **AOP-7, Edition 2, Revision 1," Manual of Data Requirement and Test for the Qualification of Explosive Materials for Military Use," dated December 2004. This AOP replaces and cancels MIL-STD 1751A, "Safety and Performance Tests for the Qualification of High Explosives (High Explosives, Propellants and Pyrotechnics)."** dated 11 December 2004.
- **AOP-38, Glossary of Terms and Definitions Concerning the Safety and Suitability for Service of Munitions, Explosives, and Related Products**
- **AOP-39, Edition 2 (Edition 2), Guidance on the Development, Assessment, and Testing of Insensitive Munitions (MURAT)**

Appendix B.14 THE OFFICE OF THE SECRETARY OF DEFENSE (ACQUISITION TECHNOLOGY AND LOGISTICS) [OSD (AT&L)] MEMORANDUM, DATED 19 MARCH 2007, SUBJECT: "INSENSITIVE MUNITIONS STRATEGIC PLANNING (IMSP)"

THE UNDER SECRETARY OF DEFENSE
3010 DEFENSE PENTAGON
WASHINGTON, DC 20301-3010

ACQUISITION, TECHNOLOGY AND LOGISTICS

MAR 19 2007

MEMORANDUM FOR SECRETARIES OF THE MILTARY DEPARTMENTS
CHAIRMAN OF THE JOINT CHIEFS OF STAFF
COMMANDER, U.S. SPECIAL OPERATIONS COMMAND
DIRECTOR, MISSILE DEFENSE AGENCY

SUBJECT: Insensitive Munitions Strategic Planning

This memorandum modifies the Department of Defense policy for the submission of Insensitive Munitions (IM) Strategic Plans to the Joint Requirements Oversight Council (JROC) and the Office of the Under Secretary of Defense (Acquisition, Technology, and Logistics) (OUSD(AT&L)). IM Strategic Plans will be required biennially beginning with the FY2009/2010 plans. The submission date for the first biennial plan is February 15, 2008. The JROC approval of the FY2007 IM Strategic Plans covers all identified procurement of non-IM compliant munitions through FY2008. Attached is additional guidance for the February 2008 submission—it will improve the quality of the strategic plans and make the review more efficient and effective.

IM Strategic Planning has provided the JROC and OUSD(AT&L) with a comprehensive view of the IM posture of the Department's total munitions portfolio and the IM investment strategies of the Services' Program Executive Officers (PEOs). The knowledge gained through the strategic planning process will assist the Director, Defense Research and Engineering, and other Science and Technology planners, in closing the technology gaps identified by PEOs and users.

The OSD point of contact is Mr. Tony Melita (703-695-1382). The JROC point of contact is: Division Chief, J8 Capabilities and Acquisition Division (703-614-3682).

Kenneth J. Krieg

Attachments:
As stated

cc:
Director, Defense Research and Engineering

INSENSITIVE MUNITIONS STRATEGIC PLANS

Key Elements

Each Strategic Plan should include as a minimum:

- An executive summary that discusses the plan's key points and the methodology used in the development and decision process.
- A complete list of all munitions (e.g. legacy, developmental, in production, awaiting production, Advanced Technology Demonstration (ATD), Foreign Comparative Test (FCT), current inventory) for which that PEO has acquisition and lifecycle responsibility
- For each munition:
  - Munition characteristics including nomenclature, Mark and/or Mod, Net Explosive Weight, and energetic fills of each relevant component.
  - RDT&E and procurement profile (funding and quantity across the Future Years Defense Plan (FYDP))
  - Baseline IM performance (known or predicted) for the IM threats per MIL-STD-2105C and the hazard classification (HC) assigned (interim or final)
  - Ongoing and planned technology integration efforts aimed at IM improvement and HC reduction and the funding supporting such efforts, and
  - New technologies required for achieving full IM compliance and the schedule for technology maturity
- Munition system IM investment priorities and prioritization criteria
- Funded Service-specific and Joint investments to demonstrate and integrate new IM technologies
- All unfunded IM requirements

Attachment

Page 1 of 10

Definitions.

Term	Definition/ Clarification
ACTD	Advanced Concept Technology Demonstration
ATD	Advanced Technology Demonstration/Development
Baseline IM Reaction	The initial IM reaction or assessment assigned to a munition for the particular IMSP cycle
CM	Configuration Manager - The activity which retains responsibility for the Technical Data Package and which is directly responsible for the configuration management of a munition or item containing energetic material
Developmental Item	Includes any new munition or item containing energetic material, without regard to ACAT level, or source of manufacture, prior to MS C. These shall be evaluated as priority items (categorized as either Tier I or II items).
Energetic Material	Explosive, propellant, or pyrotechnic material per DoD 5000.1
Exempt Munitions	Any munition/item that was on contract or produced prior to 26 January 1999, as established by the criteria of the Gansler Memorandum, and for which there has been no further procurement actions and/or PIP
Funded IM Requirement	Refers to investments for IM characterization and/or improvements
IM Compliant	Passes all IM Tests as specified by a Service/Agency THA. Tests shall be scored or assessed by the appropriate Service/Agency IM Board or Council.
IM-Certified	An IM-compliant item that has been certified by the appropriate authority.
IM Investment	Refers to investments required to achieve IM-compliance, to include S&T, technology insertion, evaluation and qualification.
IM Waivers	An approved deviation from the requirement for munitions containing energetic materials to be IM compliant issued by the JROC.
Intermediate IM Reactions	The IM reaction that is expected as a result of a planned technology insertion effort
Legacy Munition	Legacy munitions are all items in the inventory that are either in procurement or expected to be procured.
OPR	Office of Primary Responsibility infers that the respective PEO has direct oversight responsibilities
Out of Cycle Munition Reviews	Munitions requiring review not included in the current IMSP that requires immediate procurement prior to the next IMSP cycle.
PIP	Product Improvement Program
POA&M	Plan of Action and Milestones

Attachment

Page 2 of 10

Priority Munition	Shall include all munitions and/or items containing energetic material as determined by the PEO to benefit from IM-improvement, based upon the prioritization criteria contained within the IMSP, All developmental items shall be categorized as Priority Items.
P3I	Preplanned Product Improvement
SDD	System Development and Demonstration
SLEP	Service Life Extension Program
Tier I Munitions	Non IM-compliant priority items that have fully funded POA&Ms.
Tier II Munitions	Non IM-compliant priority items that do not have fully funded POA&Ms.
Tier III Munitions	Non IM-compliant , non-priority items that are being procured by another PEO, such as SMCA as the OPR, in which that activity has retained configuration management authority.
Tier IV Munitions	Non IM-compliant , non-priority items that are or expected to be procured by the reporting PEO.
Tier V Munitions	Non-priority items with no further procurement and no window of opportunity anticipated.
Tier VI Munitions	IM-compliant, non-priority items that are being procured by another PEO, such as SMCA as the OPR, in which that activity has retained configuration management authority (IM-compliant equivalent of Tier III).
Tier VII Munitions	IM-compliant , non-priority items that are or expected to be procured by the reporting PEO (IM-compliant equivalent of Tier IV).
UFR	Unfunded Requirement - The aggregate of funding required, and unavailable, to develop and integrate technology, to include retrofitting, to obtain IM compliance
Window of Opportunity	Potential windows of opportunity include: new contract award, exercise of contract options, PIP, P3I, SLEP, maintenance, and spiral development efforts

Attachment

Page 3 of 10

Issues	Business Rule
Inconsistency with JROCMs (i.e., waiver duration and specific quantity) and PEOs' interpretation of previous JROCMs for IM waivers and actions required.	Rolling IM Waivers ▪ Previously issued IM waivers will be included in the IMSP. ▪ All Programs' IM efforts will be reviewed and addressed with each IMSP submission.
Inconsistency with the reporting of shaped charge jet (SCJ) testing.	▪ Service PEOs shall assess THA to include assessment of SCJ. ▪ If SCJ threat is not applicable to the munition, the Service PEO should provide justification.
Lack of reporting on multi-Service acquisition and procurement munitions.	▪ The PEO with Configuration Manager authority and the designated Service Acquisition PEO is responsible for addressing the item in each of their respective PEO IMSPs. ▪ The CM of a munition item is responsible for addressing the IM solution regardless if they are buying the round or not.
IMSP submissions did not clearly express action plan for Unfunded Requirements (UFR).	▪ IMSP submissions require PEOs to identify a strategy for addressing UFRs.
Inconsistency of reporting IM investment.	▪ Service PEOs will itemize specific IM investments; separating the cost of technology insertion from IM testing and evaluation to include cost associated with requalification and integration requirements
Reporting for Developmental items is inconsistent across all Service PEOs.	▪ All Service PEOs will address developmental items in their respective IMSP. ▪ A POA&M addressing the IM strategy for all developmental munitions is required. ▪ If the Service PEO is not addressing IM; justification as to why, is required in the IMSP submission.
Inconsistency between PEO IMSP (lack of detail; assumptions not fully described; methodology for drawing the priority line not always described).	▪ Service PEOs will adhere to the terms of reference (i.e., business rules, definitions, IM reactions, tables and executive summary templates) as directed by the FP FCB.

Attachment

Page 4 of 10

Plan of Action and Milestones (POA&M) Format

Note: POA&Ms, while an integral part of the PEO IMSP, must nevertheless be prepared with sufficient detail to withstand review on their individual merit alone as was the case prior to the IMSP process. As a result of this policy decision, redundancies between the IMSP and individual POA&Ms are expected. POA&Ms are required for **all Priority (Tier I and II, and all developmental)** items.

EXECUTIVE SUMMARY
Address the status of the program, applicable dates (decision and testing), IM approach, what programs are being leveraged, anticipated successes and shortfalls. Include a summary quad chart (discussed in Section 6 of the IMSP Outline).

1. INTRODUCTION
1.1 Purpose
1.2 Background
1.3 Scope of Work
1.3.1 Program Status

2. PROGRAM MANAGEMENT
2.1 Organization
2.2 IM Point of Contact

3. SYSTEM DESCRIPTION
3.1 Complete Description (include variants)
3.2 Complete list of Energetic Material (Table)
3.3 Functional Description
3.4 Component List & Description

4. THREAT HAZARD ASSESSMENT SUMMARY
4.1 Projected Threat Environment
4.2 Summary of Planned Logistical and Tactical Life-Cycle Profile
4.3 Recommended Tests

5. IM TEST RESULTS
5.1 IM Test Conditions Summary
5.2 Test Result Summary
5.3 Summary of Service Insensitive Munitions Board Recommendations

6. IM TECHNICAL APPROACH
6.1 Previous IM efforts (Challenges & Progress vs. Previously approved POA&M)
6.2 Future IM Efforts (Funded vs. Unfunded)
6.3 Technology Requirements
7. SCHEDULE

Attachment

Page 5 of 10

7.1 Milestone/Program Status (to include: IM Improvement Schedule and Projected Insertion Opportunities)

8. FUNDING ACROSS THE FYDP

8.1 Insensitive Munitions (Development, Integration, Testing, Qualification) and Procurement Funding

8.2 Unfunded Requirements

9. BUYS / PROCUREMENTS

9.1 Procurement Quantities

10. IMPACT

10.1 Consequence of Reaction

10.2 Operational Benefits and/or Limitations

10.3 Logistical Benefits and/or Limitations

10.4 Cost Benefits or Penalties

Attachment

Page 6 of 10

PEO ABC MUNITIONS PORTFOLIO			
Munitions	Response	Notes	
		Paragraph	Appendix
Items in Portfolio	XXX	5.3	B
Planned Items in Procurement Across FYDP	XXX	5.4	B
Items in Procurement for Current Period	XXX	5.5	B
Items in Development	XX	5.6	B
Items IM-Compliant (how many items total)	XXX	5.7	B
Items with JROC–Approved Waivers	XXX	5.8	A - Refs (h), (n)
Items Obtaining IM Compliance This Period (from this year to the previous year)	XX	5.9	A - Refs (j), (k), (l)
Items with Incremental IM Improvements	X	5.10	
Items Requiring an IM Waiver	XXX	5.11	B
Tier I Munitions (Priority) Funded	XX	5.12	B, F
Tier II Munitions (Priority) Not Fully Funded	X	5.13	B
Tier III Munitions (SMCA or Other Service Procured)	XXX	5.14	B
Tier IV Munitions (Legacy)	X	5.15	B
Tier V Munitions (Exempt)	X	5.16	B
Tier VI Munitions (IM compliant, other PEO/Agency is buying)	XXX	5.17	B
Tier VII Munitions (IM compliant, PM is buying)	XX	5.18	B
Total Obligation Authority (TOA) (Munitions Only) PEO R&D and Procurement	$0	5.19	B
Funded IM Investment ($M)	$0	5.20	
Unfunded IM Investment ($M)	$0	5.21	
Joint IM Investments (Multi-Service Organization)	$0	5.22	
Notes:			

Attachment

Page 7 of 10

IM Reactions

1. In an effort to clearly articulate to senior leadership the payoff from the IM investment that DoD is making in priority munitions programs, it is recommended that PEOs generate a common table that shows how the IM response of specific munitions will mature and when the munitions will be available for production or procurement. The template provided at Table 1 is required to be submitted for Priority munitions. The table incorporates a stoplight matrix for all munitions in the portfolio that addresses Baseline/Current Status of IM performance (known or predicted for the IM threats per MIL-STD 2105C and the hazard classification (HC) assigned (interim or final). In addition, the activity that scored the IM reactions must be identified. The stoplight matrix also includes intermediate (Future) reactions that address the reaction that is anticipated to be achieved based on current technology advancement and includes the year that the IM improvement is expected to be available. The available (Avail) column is intended to identify when the emerging technology is expected to be mature for insertion.

IM Maturation Based on Funded PEO Tier I Programs																		
Baseline IM Response								Projected IM Response										
Baseline Munition	FCO	SCO	BI	FI	SD	SCJ	H-C	POA&M Munition Program	FCO	SCO	BI	FI	SD	SCJ	Proj. H-C	FY	Total Remaining IM Investment ($M)
Munition XYZ Example	IV	II	III	IV	P	(P)	1.1		V	(VI)	(V)	(V)	(P)	(P)	(1.2.3)	10	$17.65
	IV	II	III	IV	P	(P)	1.1		(IV)	(IV)	(IV)	(IV)	(P)	(P)	(1.2.1)	10	$6.50
	IV	II	III	III	(P)	(P)	1.1		(IV)	(III)	(IV)	(IV)	(P)	(P)	1.1	15	$0.75

DEFINITIONS

Baseline IM Response: The IM response of the munition at the start of the POA&M. In some cases this will be the response of a munition being replaced by a munition being addressed in the POA&M. For a developmental item this could be either a munition being replaced, or upgraded, or the baseline could be not applicable (N/A) or TBD if this munition is providing a new capability and will not be eliminating another munition from procurement. The latter would apply if based on test or assessment or if a preliminary developmental munition design yielded a baseline IM response. Baseline responses for any munition can be assessed, but assessed values should be replaced if actual IM test results become available during execution of the POA&M.

Projected IM Response: The IM response of the munition at the completion of the POA&M. Relative to the baseline, this will show the incremental improvement of the munition response that is to be gained by the investment in the POA&M.

FY: The Fiscal Year when a munition with the projected IM response could potentially be procured for use.

Total Remaining IM Investment ($M): The total IM investment remaining across the POA&M. For a Tier I munition, the POA&M should be fully funded and at the end of the POA&M, the munition should be in a state that it would be qualified and could be procured and used. This should only include those costs that are actually incurred by IM; for example, if a munition is being modified or qualified for purposes other than IM, those costs need not be addressed, although costs for IM qualification should always be included.

Table 1 – IM Maturation Based on Funded Tier I Programs

Attachment

Page 8 of 10

2. Table 2 reflects a legend that is to be used for the reporting of all IM reactions:

		Score		IM Test							Score		
Reaction	Response	Tested	Assessed	FCO	SCO	BI	FI		SD	SCJ	Tested	Assessed	Reaction
Type VI	No Reaction	VI	(VI)	Fast Cook Off	Slow Cook Off	Bullet Impact	Fragement Impact		Sympathetic Detonation	Shaped Charge Jet	P	(P)	Type VI
Type V	Burn	V	(V)										Type V
Type IV	Deflagration	IV	(IV)										Type IV
Type III	Explosion	III	(III)										Type III
Type II	Partial Detonation	II	(II)								F	(F)	Type II
Type I	Detonation	I	(I)										Type I

Table 2 – IM Response Reporting Legend

For clarification, the reactions listed in Table 2 are the only entries permitted, i.e., Roman Numerals for FCO, SCO, BI, and FI tests, "P" or "F" for SD and SCJ tests, parenthetical notation when reaction type is assessed, proper color coding. Do not enter the title of the reaction, or an abbreviation thereof, i.e., Type IV – Deflagration, or Defl., or create new colors to suit individual needs. Where a reaction type is projected to cross two different types, use the following example as guidance: IV/V; yellow transitioning to green may be used for the color coding. This is the only deviation to the protocol that will be permitted.

Attachment

Page 9 of 10

Funding

1. Template for reporting IM funding/Investments:

Tier I Munitions Insensitive Munitions (IM) and Investment Funding ($K)							
Funding	FY07	FY08	FY09	FY10	FY11	FY12	FY13
Munition/Special Interest Programs							
Total							

2. Template for reporting unfunded requirements

Tier II Munitions Insensitive Munitions (IM) and Investment Funding ($K)							
Funding	FY07	FY08	FY09	FY10	FY11	FY12	FY13
Munition/Special Interest Programs							
Total							

3. Template for accessing the cost and impact of IM investment Funding and Associated Cost by Munition Program

Munition Program - (Reported By Munition) IM Investment Funding and Associated Cost							
Associated Funding Requirements	FY07	FY08	FY09	FY10	FY11	FY12	FY13
"Include additional funding streams as appropriate"							
Hardware (Assets)							
Technology Development							
Engineering Assessment							
Qualification Testing							
Requalification Testing							
Total							

Attachment

Page 10 of 10

Appendix B.15 Considerations for Determining IM Investment for Insensitive Munitions Strategic Planning (IMSP), and Plan of Action and Milestones (POA&M) Development

Reference: (a) OSD (AT&L) Memorandum dated MAR 19 2007 (Subject: Insensitive Munitions Strategic Planning)

1. During the 10-12 September 2007 meeting of the Joint Services Insensitive Munitions Panel (JSIMTP), several discussions took place regarding the reporting of IM investment data. In particular, there were discussions regarding how to report IM investments when they are made as part of an integrated development program. It became clear that additional clarification/guidance was required.

2. The JSIMTP and the DoD IM IPT provide technical and programmatic oversight of the IM programs being executed by the PEOs and PMs and subsequently reported in their biennial IM Strategic Plans. While not directing how the investments are made, these bodies are expected to conduct an informed and detailed review of the plans and POA&Ms, and report their findings to the JROC and OSD. In order to conduct these reviews in an efficient and effective manner, we have established business rules that direct the PEOs and PMs on how certain technical and programmatic data should be presented. These rules allow for easier review and analysis of the information and ease the burden of rolling up the data for reporting to senior leadership. With this in mind, we offer this clarification in order to assist during the preparation of IM Strategic Plans and POA&Ms. Though IM efforts may be part of an integrated development program, we are requesting that a break-out of funding identifying IM investments be made. It is understood that this may create some level of uncertainty; we trust that the PEOs/PMs are in the best position to make the most accurate break-out of IM investments. Once this task has been completed, the program can then report the investments as shown in tables 8.1 and 8.2 (fully funded efforts) or Tables 8.1, 8.2 and/or 8.3 (unfunded or partially funded). Once each task is known by FY, the program can begin to categorize the efforts based on the funding streams shown in Table 8.2.

3. The attachment to reference (a), provides the format for preparing the Plan of Action & Milestones (POA&M) for each Tier I and Tier II program. That format included templates for reporting the IM funding/investments and Unfunded Requirements (UFR) to be included in Section 8 of POA&Ms. Though not provided as a "Template Table", reference (a) requires the POA&M to address procurement funding. 4. Any funding presented in the IMSP or POAM should be defendable and contain justification within subsequent paragraphs with appropriate reference to source and/or rationale. No number should be expected to stand alone.

- **Munitions Program IM Investment/Funding (Table 8.1):** This table displays the total funding currently budgeted to conduct IM design and testing and, on a separate line within the same table, the procurement funding across the Future Years Defense Program (FYDP). The procurement funding line should always match the Service(s) budget submission for the FYDP being addressed in the IMSP. The following table was formatted subsequent to the 10-12 September 2007 JSIMTP meeting for reporting required data and reflects an acceptable level of detail as identified by the JSIMTP.

"Munitions / Special Interest Programs" Insensitive Munitions (IM) Investment and Service Procurement Funding ($K)						
IM Investment Funding						
	FY08	FY09	FY10	FY11	FY12	FY13
IM Design and Testing						
Investment Subtotal						
Procurement Funding						
	FY08	FY09	FY10	FY11	FY12	FY13
Army						
Air Force						
Marine Corps						
Navy						
SOCOM						
Procurement Sub-Total						
Total	0	0	0	0	0	0

Table 8.1

- **Cost and Impact of IM Investment Funding (Table 8.2):** This table provides a breakdown of the IM design and testing funding portion of Table 8.1. This is the logical place to identify the available funding. When doing so the program should identify what the available funding is actually being used for. The following is provided as a clarification:

  - Hardware (Assets) - This should be the funding required to procure test assets, including any munitions required for IM testing and any expendable equipment required to conduct the test(s) such as steel plating, witness plates, and fuel. Operational assets that will not be consumed during the IM testing evolution(s) should not be included in the table.

  - Technology Development - This should be the funding required to develop new IM technology or to incorporate newly acquired IM technology into the munition. This should include the individual program funding provided to a common pool to develop technology that is being applied across several munition programs, if applicable.

- **Engineering Assessment:** This should be the funding required to conduct any IM engineering tests for the program, including evaluation of IM testing conducted on similar munitions for possible incorporation into the program.

- **Qualification Testing:** This should be the funding required to conduct both the formal baseline IM testing and all formal IM testing conducted on all subsequent changes to the munition(s). Any funding required for other-than-IM qualification testing, including Hazard Classification (HC) testing, should be captured separately as a subset to the IM testing.

- **Requalification Testing:** This should be the funding required to conduct any testing required to requalify the munitions for use. This includes all costs associated with the qualification of an energetic for use within DoD and for use within a specific munition.

The program should carefully analyze the above information as it is being developed and document how it was derived. The funding streams in Table 8.2 should be subcategorized to reflect fidelity in the data or, as an alternative the program may summarize the information in a narrative form in a paragraph below Table 8.2. Once completed, the funding for each FY of the FYDP is entered into the first line ("IM Design and Testing") of Table 8.1. The program should also consider identifying the type of money be used (e.g., Procurement, O&M, RDT&E).

Munitions Program - (Reported By Munition) IM Investment Funding and Associate Cost ($K)						
Associated Funding Requirement	FY08	FY09	FY10	FY11	FY12	FY13
"Include additional funding streams as appropriate"						
Hardware (Assets)						
Technology Development						
Engineering Assessment						
Qualification Testing						
Requalification Testing						
Total ($K)						

Table 8.2

- **Munitions Program Unfunded Requirement (Table 8.3):** This table displays the UFR by FY and should be supported by data and information at the same level reflected in Tables 8.1 and 8.2, above.

Tier II Munitions Insensitive Munitions (IM) and Investment Funding ($K)						
IM Investment Funding						
	FY08	FY09	FY10	FY11	FY12	FY13
IM Design and Testing						
Investment Subtotal						
Procurement Funding						
	FY08	FY09	FY10	FY11	FY12	FY13
Army						
Air Force						
Marine Corps						
Navy						
SOCOM						
Procurement Sub-Total						
Total	0	0	0	0	0	0

Table 8.3

- UFR (Table 8.3): In order to understand how this number was derived a new table (Table 8.4) should be generated. This table should be similar to Table 8.2 but should address the funding required to complete the IM effort vice the funding available to conduct the IM effort. Again, each UFR should include detailed explanations. Once Table 8.4 is completed the aggregate funding for each FY of the FYDP is entered into Table 8.3.

- When the available funding and UFR are known the program should revisit the schedule and address, in narrative form, which tasks on the schedule cannot be completed with the current level of funding, the strategy for addressing the UFR, and the impact on the program if additional funding is not provided.

Appendix B.16 JROC "Business Rules" for Clarification of Tier Assignment Insensitive Munitions Strategic Planning (IMSP), and Plan of Action and Milestones (POA&M) Development

Reference:

(a) OSD (AT&L) Memorandum dated Mar 19 2007 (Subject: Insensitive Munitions Strategic Planning)

(b) OSD (AT&L) Memorandum dated Jul 3 2001 (Subject: Insensitive Munitions Compliance for Small Arms Ammunition)

(c) OSD (AT&L) Memorandum dated 10 Oct 2003 (Subject: Insensitive Munitions (IM) Compliance for Cartridge Actuated Devices and Propellant Actuated Devices (CAD/PAD))

1. The attachment to reference (a) provides discussion and guidance for the ranking of munitions within a PEO's Munitions portfolio. During the 44th DoD IM IPT it was apparent that the criteria established for accounting for munitions in the Tiers were not being applied uniformly by the PEOs. The following information is provided for your consideration.

Priority Munitions: Each PEO is responsible for developing and documenting the criteria and process by which they prioritize all munitions and/or items within their IMSP with regards to obtaining IM compliance for that item. All items deemed as "priority munitions" shall be placed in either Tier I or Tier II. In addition, all items categorized as "developmental items" shall also be categorized as Tier I or Tier II priority munitions.

Developmental Items: As soon as a material solution containing energetics is selected to meet an established requirement the PEO managing that item shall include it in the list of priority items as a Tier I or Tier II item. The item shall remain a developmental item until it reaches Milestone "C", at which point the PEO may re-prioritize the item based on established criteria.

- Clarification on Documenting Developmental Items: It is recognized that developing a formal Plan of Action & Milestones (POA&M) on a new developmental item is not normally practical, depending of the level of maturity of the program. However, the planning process to incorporate IM technology into each item must begin early in the acquisition, including during Advanced Concept Technology Demonstration (ACTD)/Advanced Technology Development (ATD) and continue through System Development and Demonstration (SDD). An abbreviated POA&M or "slick sheet" is, therefore, acceptable in lieu of a formal POA&M. The slick sheet should consist of an Executive Summary and Quad Chart, as a minimum. The PEO is expected to mature the program documentation commensurate with the program maturity.

Small Arms Ammunition: In keeping with the guidance contained within reference (b), Small Arms Ammunition currently under development and any developed in the future; with incendiary

or high explosive projectiles shall continue to have their IM compliance determined on a case-by-case basis. For the purpose of tracking munitions programs and reporting IM investment, Small Arms ammunition (.50 Caliber and smaller) including shotgun shells without an Explosive Projectile and/or containing Incendiary shall be treated as a developmental/priority munitions programs until the program achieves Milestone C. Small Arms in this category will not be required to develop POA&Ms except under unique circumstances; however, a "slick sheet" should be developed at a minimum and while in development they should generally be assessed to pass applicable IM Tests. Notionally, these small arms ammunition items should be reported as Tier II.

Insensitive Munitions (IM) Compliance for Cartridge Actuated Devices and Propellant Actuated Devices (CAD/PAD): Per the guidance contained within reference (c), items in the CAD/PAD families currently under development, and any developed in the future shall continue to have their IM compliance determined on a case-by-case basis as a part of the CAD/PAD qualification and certification process. CADs/PADs in this category will not be required to develop POA&Ms except under unique circumstances; however, a "slick sheet" should be developed at a minimum and while in development they should be assessed based on applicable IM Tests reactions. Notionally, these CAD/PAD items in develop should be reported as Tier II.

Tier I Items: Items that are developmental and/or categorized as priority munitions utilizing the PEO's established and documented criteria and that have a fully funded POA&M should be placed in Tier I. **Note:** the term fully funded means that funds are available and/or there is a reasonable expectation that the required funding will become available to execute the program plan.

Tier II Items: Items that are developmental and/or categorized as priority munitions utilizing the PEO's established and documented criteria and do not have a fully funded/unfunded POA&M should be placed in Tier II. **Note:** The term unfunded indicates that requirements are identified but there is no expectation that the required funding will become available to execute the program plan without higher headquarters intervention.

- There should be discussion within the POA&M addressing to identify any unfunded requirements (UFR) and a statement as to whether or not a UFR exists.

- If a UFR exists it should be included within the POA&M and discussed in detail within the IMSP including actions taken and/or planned to secure necessary funding to permit execution of the POA&M.

- If a UFR does not exist it should be developed and included as supplemental data.

- Clarification on Tier II Items: If a PEO has exerted maximum effort seeking a solution to obtain IM compliance on a Tier I or II item and existing technology does not exist to make the item fully IM compliant, the respective Service IM Board should be consulted. If the Service IM Board concurs that spending additional funding on that item is not in the best interest of the PEO or the DoD at that time, the program should remain as a Tier II item with an unfunded POA&M. The POA&M should reflect the reason for the decision and document the Service Board's concurrence. The PEO shall review the technology during

each IMSP submission cycle to evaluate new technology and annotate the POA&M accordingly.

Tier III Items: Non-IM compliant, non-priority items that are configuration managed and procured by another PEO. This includes items which are configuration managed and procured by the US Army Single Manager for Conventional Ammunition (SMCA), even if they are not being procured for use by the US Army.

Tier IV Items: Non-IM compliant, non-priority items that are being procured or are expected to be procured by the reporting PEO. This should include legacy items that have a likelihood of being placed on a production contract during the FYDP, even if they are not currently funded in the FYDP.

Tier V Items: Non-priority items that are not expected to be procured by the reporting PEO. However, if the reporting PEO expects that an opportunity will arise in the near term to insert IM technology into an item it should be considered for placement in Tier IV instead of Tier V.

Tier VI Items: IM compliant, non-priority items that are configuration managed and procured by another PEO. This includes items which are configuration managed and procured by the US Army SMCA, even if they are not being procured for use by the US Army (this is the IM complaint equivalent of Tier III items).

Tier VII Items: IM compliant, non-priority items that are being procured or are expected to be procured by the reporting PEO. This should include legacy items that have a likelihood of being placed on a production contract during the FYDP, even if they are not currently funded in the FYDP (this is the IM complaint equivalent of Tier IV items).

JROC "Business Rules" for Clarification on Insensitive Munitions (IM) Reactions Insensitive Munitions Strategic Planning (IMSP), and Plan of Action and Milestones (POA&M) Development

Reference:

(a) OSD (AT&L) Memorandum dated Mar 19 2007 (Subject: Insensitive Munitions Strategic Planning)

1. During the 35th meeting of the Joint Services Insensitive Munitions Panel (JSIMTP), several discussions took place regarding the presentation of IM Reactions (Baseline and Future) and Hazard Classification predictions. As the Insensitive Munitions Strategic Planning (IMSP) process evolves it becomes apparent that additional clarifications of the "business rules" are necessary. The following clarification is provided for the data provided in the IM Reactions chart previously prescribed for use in the Plan of Actions and Milestones (POA&Ms).

Use of parentheses with reaction type: Reactions that have been formally tested to an approved test plan, using test procedures approved by the respective Service IM Board, and scored by that Board should not use parentheses. All other tests results, including those that were assessed based on an analogy to another program, should be shown in parentheses.

Predicted IM reactions: These reactions should be predicted based on the Program's realistic expectations on what can be accomplished with available or expected technology insertion. It has been noted that many programs show all current reactions as all Type "I" and "Fails" and predict all future reactions as Type "V" and "Pass" with little or no supporting text in the POA&M on how that will be achieved. While it is recognized by all in the DoD IM community that the goal is to become fully IM compliant, the predicted IM reactions should reflect what is considered possible with the existing technology and funding. All predicted reactions should be assessed based on the IM reactions expected to be achieved by applying the IM Standard Test Criteria.

Predicted Hazard Classification: It has been noted that the approach to predicted hazard classification (HC) shown in the table is almost the exact opposite that of the predicted IM reaction. While many programs predict a change from all "red" to all "green" in the IM reaction the HC does not change. Recognizing that there are some differences in the IM testing and the HC testing it still seems logical that significant improvements in IM would result in at least some improvements in HC. Therefore, the program office is requested to carefully evaluate the improvements in both IM test reactions and HC.

Application of Joint IM Test Standards: It is the policy of the JROC to use the Joint IM Test Standards on all future formal IM testing by all Services and Agencies within the DoD. The exception to this policy is the near-term (less than 6 months) formal IM testing that has already been approved by the Service IM Board based on a formal test plan that was approved prior to 1 October 2007.

While additional IM tests may be conducted based on the Threat Hazard Assessment and/or other program or Service specific applications, testing to the Joint IM Test Standards is required. Note that this policy applies only to future formal IM testing. Retesting of formal IM Baseline tests is not required.

Appendix C: IM Strategic Plan Templates

Appendix C.1 APPENDIX C: IM STRATEGIC PLAN TEMPLATES

To be provided

Appendix C.2 PLAN OF ACTION AND MILESTONES FORMAT

Plans of Action and Milestones (POA&Ms) are a central element of IMSP development as well as executing the acquisition program.

POA&Ms are updated to capture significant changes in the acquisition life cycle and represent the most current program information.

As stated in the March 19, 2007 OUSD (AT&L) IMSP policy memorandum (Appendix B), POA&Ms must contain sufficient detail to stand on their own merits, without dependence on supporting documentation. The overlap of information between an IMSP and POA&M is intended and expected.

POA&Ms are required for all Priority Tier I and II (to include developmental) munitions programs.

A POA&M template detailing all required information is provided below. All POA&Ms will be constructed and maintained in the format provided.

Appendix C.3 POA&M TEMPLATE

Executive Summary: This section provides:

- an executive level overview of the program
- the program's priority Tier level
- the status of the program (first or subsequent POA&M submission)
- contracting methods utilized
- description of item
- applicable milestones and dates (decision and testing)
- planned IM approach, program/technology being leveraged
- anticipated successes and shortfalls
- any other pertinent information deemed appropriate for executive level decision approval
- a summary quad chart.

Figure C-1 below, illustrates what is to be included in a quad chart.

- Munition Photo

- IM Reaction Table (Baseline/Projected/HC/Anticipated Availability Date and Total IM Investment)
- Program Milestones (with dates); and IM Funding/Procurement Profiles.

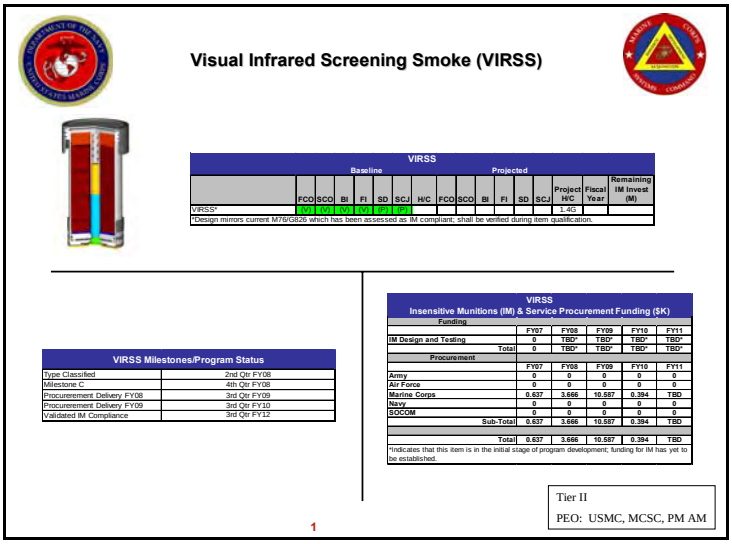

Visual Infrared Screening Smoke (VIRSS)

VIRSS	Baseline							Projected							
	FCO	SCO	BI	FI	SD	SCJ	H/C	FCO	SCO	BI	FI	SD	SCJ	Project H/C	Fiscal Year	Remaining IM Invest (M)
VIRSS*	0/1	0/1	0/1	0/1	0/1	0/1								1.4G		

*Design mirrors current M76/G826 which has been assessed as IM compliant; shall be verified during item qualification.

VIRSS Milestones/Program Status	
Type Classified	2nd Qtr FY08
Milestone C	4th Qtr FY08
Procurerement Delivery FY08	3rd Qtr FY09
Procurerement Delivery FY09	3rd Qtr FY10
Validated IM Compliance	3rd Qtr FY12

VIRSS Insensitive Munitions (IM) & Service Procurement Funding ($K)					
Funding					
	FY07	FY08	FY09	FY10	FY11
IM Design and Testing	0	TBD*	TBD*	TBD*	TBD*
Total	0	TBD*	TBD*	TBD*	TBD*
Procurement					
	FY07	FY08	FY09	FY10	FY11
Army	0	0	0	0	0
Air Force	0	0	0	0	0
Marine Corps	0.637	3.666	10.587	0.394	TBD
Navy	0	0	0	0	0
SOCOM	0	0	0	0	0
Sub-Total	0.637	3.666	10.587	0.394	TBD
Total	0.637	3.666	10.587	0.394	TBD

*Indicates that this item is in the initial stage of program development; funding for IM has yet to be established.

Tier II
PEO: USMC, MCSC, PM AM

1

Figure C-1. Quad Chart Example

The Executive Summary and quad chart will be followed by Sections 1 through 10 below.

1. Introduction

1.1 Purpose

1.2 Background

1.3 Scope of Work

1.4 Program Status

2. Program Management

2.1 Organization

2.2 IM Points of Contact

3. System Description

3.1 Complete Description (include variants)

3.2 Complete list of Energetic Material (Table)

3.3 Functional Description

3.4 Component List & Description

4. Threat Hazard Assessment Summary

4.1 Projected Threat Environment

4.2 Summary of Planned Logistical and Tactical Life-Cycle Profile

4.3 Recommended Tests

Note: In Section 4, care should be taken to adequately address various threats hazards anticipated throughout the munitions life cycle but, not to duplicate the detailed, formal THA.

5. IM Test Results

5.1 IM Test Conditions Summary

5.2 Test Result Summary

5.3 Summary of Service Insensitive Munitions Board Recommendations

6. IM Technical Approach

6.1 Previous IM efforts (Challenges & Progress vs. Previously approved POA&M)

6.2 Future IM Efforts (Funded vs. Unfunded)

6.3 Technology Requirements

7. Schedule

7.1 Milestone/Program Status (to include: IM Improvement Schedule and Projected Insertion Opportunities)

8. Funding Across the FYDP

8.1 Insensitive Munitions (Development, Integration, Testing, Qualification) and Procurement Funding

8.2 Unfunded Requirements

9. Buys/Procurements

9.1 Procurement Quantities

10.Impact

10.1 Consequence of Reaction

10.2 Operational Benefits and/or Limitations

10.3 Logistical Benefits and/or Limitations

10.4 Cost Benefits or Penalties

POA&M Examples

The following examples have been taken from POA&Ms, and are to be used as guidance only.

Based on the maturity of program, POA&M detail may vary greatly between programs. It is conceivable that a new, developmental program may have far less data available than a long-standing program that has had multiple POA&M submissions.

However, regardless of the maturity of the program, POA&Ms should contain all the chapters and sections identified above with sufficient detail consistent with available data or justification as to why data as been omitted. Access an approved POA&M sample via this link.

Appendix D: IM Acquisition Templates

The participation of multiple DoD programs in the IM acquisition process demands that PMs in all Services adhere closely as possible to the same standards. Templates have been devised to standardize documents common to every program, in order to facilitate meeting these standards, and to enable enhanced collaboration across Services and programs.

Every effort should be made by PMs to adhere as closely as possible to the same standards. IM Threat Hazard Assessments (THAs), test plans, and test reports represent the cornerstone documents in IM acquisition. Each document is discussed separately in the subsequent sections. Additional information on requirements for THAs, test plans, and test reports can also be found in MIL-STD 2105C.

Appendix D.1 IM Threat Hazard Assessments

An IM THA is a continuously evolving document that is updated/modified as a munitions system progresses through development. The document evaluates threats and munition reaction(s) throughout the program's life-cycle, potential collateral damage from a munition reaction, and potential solutions for non-IM responses. The components of an IM THA are listed below.

- **Executive Summary:** A brief description of the munitions system and development status.
- **Recommendations:** Recommendations about the types of tests to be conducted in order to establish the IM characteristics of the munition item, munition configuration and applicable test threat, component and/or full scale tests, as well as any engineering or screening type tests that would be beneficial.
- **IM Objectives and Approach:** This section defines the nature of various threats, the design objectives in mitigating these threats, and the intended approach to achieve these objectives. The threats listing will include all identified unplanned stimuli which may present a credible threat to the munition, and the part of the lifecycle in which the threat is present.
- **System Description:** Includes detailed component descriptions and energetics.
- **Life Cycle Analysis:** A cradle-to-grave sequence description of a munition, which includes details on logistic configuration(s), transportation method(s), storage configuration(s), fielded configuration(s) and any system specific considerations.
- **Potential Areas for Improvement:** Identification of technologies that have the potential to improve the IM characteristics of a munition item.
- **References:** A listing of all applicable references used in developing the IM THA. See Service IM POC for an approved THA to use as a reference.

Appendix D.2 IM Test Plans

Clear and well-conceived test plans are essential to a successful IM test program, and the more effort that is devoted in the planning stage, the greater the likelihood of a successful outcome. The starting point for any IM trial is the relevant test STANAG per standardized IM testing protocols.

It is important that the latest edition is used. Allied Ordnance Publication 39 (Edition 2), provides a vigorous list of considerations that should be factored when creating a test plan. The following format is to be used when drafting IM test plans:

- **Introduction:** A brief overview of the particular munitions system being tested and general testing approach.
- **Objective:** A statement of purpose and expected testing outcome.
- **System Configuration:** Written description of the munitions system being evaluated. Additionally, photographs, where possible, should be included to show system configuration at the time of testing.
- **Test Description:** A table summary of test name, number of each variety of tests to be conducted, test configuration(s), quantity of munitions tested, and pass/fail criteria for each test. Additionally, the following will be documented for each variety of test:
  - Description
  - Configuration Details
  - Number of Tests
  - Pre-test Examination Details
  - Test Procedure
  - Data Sought
  - Pass/Fail Criteria
- **Safety:** A detailed listing of safety considerations and measures implemented to preclude violations.
- **Security:** Classification of the testing.
- **Participants:** Personnel and support activities participating.
- **Data Analysis:** An explanation of how the data will be used to determine pass or fail.
- **Appendices:** Each test variety will have a data collection sheet included in the test plan as an appendix. All necessary information should be listed as appropriate, including but not limited to the following:
  - Test Item Description (include Lot Number, Model Member and Serial Number)
  - Ambient Conditions
  - Test Facility
  - Initial Inspection procedure
  - Test Setup
  - Instrumentation
  - Test Results (including narrative description and explosive reaction level)
  - Post-test Description.
  - Threat and Hazard Assessment (Summary)
  - Capability document.

Appendix D.3 IM Test Reports

The essential elements of an IM test report are described below. The precise format may vary depending upon the requirements of the customer and the standard procedures of the Test Facility. The elements listed below are the absolute minimum, and though reports should be as concise as practical; when there is doubt, the author of the report should include information rather than omit it. These requirements are codified in AOP 39 (Edition 2) Guidance on the Assessment and Development of Insensitive Munitions.

- **Executive Summary:** A one-page summary describing the test and concluding with an initial assessment of the response.
  - Introduction
  - Background - testing rationale for test, test sponsor, place and date of test, test procedure
  - Aim(s) and Objective(s) of test
  - Test Officials
  - List of those attending the test.
- **Test Equipment:** Identify all equipment used for the test. This will typically include:
  - Explosive stores, design standard, details of any inert components and packaging with diagrams and photographs of the test items before test
  - Exploded diagram of the packaged store (for packaged tests, to show packaging configuration and internal furniture)
  - Ancillary equipment (e.g., firing device for bullet and fragment impact)
  - Firing/Initiation System (e.g., detonator or shaped charge jet warhead to initiate donor in Sympathetic Reaction)
  - Instrumentation - list of all instrumentation used
  - Detailed Test Procedure.
- **Test Configuration:** Describe the test site and layout of test item, including test stand and method of fixing test item to the stand, and instrumentation. It is essential to include a diagram showing test area, location of test item, position of witness plates, blast screens and similar devices, and all instrumentation with relevant distances. Include color photographs of the test set up to show both general arrangement and close up details of the test item and how it is mounted.
- **Calibration:** Include details of any calibration tests, for example to achieve correct impact velocity and impact location for bullet and fragment impact.
- **Safety Measures:** Include details of range safety measures taken to protect personnel.
- **Results:** Describe the test in detail, including a diary or time log of events where appropriate (e.g., for Fast and Slow Heating). In particular, describe the reaction of test item. Remember to include:
  - Details of all instrumentation measurements, temperature records, and blast overpressure records.
  - A debris map identifying all ejected debris, location, and distance from test position.

  - Photographs of the test item post test and photographs of debris, the test site (to show damage and cratering), and of witness plates and screens. Label each photograph to identify clearly the subject, particularly the precise nature of the debris. Where the test has been conducted packaged and the lid of the container has remained in situ, include internal photographs with the lid removed, but indicate that the lid was removed post-test. Include any post-test X-ray photography to determine condition of test items.
- **Meteorological Conditions:** Record the relevant prevailing weather conditions at the time of the test (e.g., wind speed, temperature).
- **Disposal of explosive items:** Include a brief statement of how the explosive test items were disposed of.
- **Conclusions:** A short summary of the results of the test and an initial assessment of the reaction Type, including rationale for the assessment.
- **References:** The report should always include test directive and test procedure (e.g., test STANAG). See Service IM POC for an approved Test Plan to use as a reference.

Appendix E: DEFINITIONS

APPENDIX E: DEFINITIONS

Term	Definition/Clarification
Advanced Concept Technology Demonstration (ACTD)	Advanced Concept Technology Demonstration
Advanced Technology Demonstration/Development (ATD)	Advanced Technology Demonstration/Development
Baseline IM Reaction	The initial IM reaction or assessment assigned to a munition (once assigned Baseline IM Reaction remains the same throughout future IMSP cycles)
Cartridge	An energy source utilizing one or more energetic materials
Cartridge Actuated Device (CAD)	A device releasing cartridge energy to perform a work function
Configuration Manager	The activity which retains responsibility for the Technical Data Package and which is directly responsible for the configuration management of a munition or item containing energetic material
Conditional Materiel Release (CMR)	Materiel release conditions, deficiencies, or shortfalls are generally recognized as those types of issues that are significant enough to be raised to decision makers for release approval consideration
Commercial Off The Shelf (COTS)	Commercial items that require no unique government modifications or maintenance over the life cycle of the product to meet the needs of the procuring agency
Delay Actuated Devices	A family of CAD items releasing cartridge energy after a specified time delay to perform work function
Developmental Item	Includes any new munition or item containing energetic material, without regard to ACAT level, or source of manufacture, prior to MS C. These shall be evaluated as priority items (categorized as either Tier I or II items)
Electric Initiation Devices	A family of CAD items uses electricity to initiate; an electro-explosive device (EED). An explosive or pyrotechnic component initiates an explosive, burning, electrical, or mechanical train and is activated by the application of electrical energy
Energetic Material	Explosive, propellant, or pyrotechnic material per DoD 5000.1
Exempt Munitions	Any munition/item that was on contract or produced prior to 26 January 1999, as established by the criteria of the Gansler Memorandum, and for which there has been no further procurement actions and/or PIP
Funded IM Requirement	Refers to investments for IM characterization and/or improvements
IM	Munitions which reliably fulfill their performance, readiness and operational requirements on demand and which minimize the probability of inadvertent initiation and severity of subsequent collateral damage to weapon platforms, logistic systems and personnel when subjected to selected accidental and combat threats.
IM Compliant	Passes all IM Tests as specified by a Service/Agency IM THA. Tests should be scored or assessed by the appropriate Service/Agency IM Board or Council
Intermediate IM Reactions	The IM reaction resulting from latest IM efforts in technology insertion beyond the Baseline IM Reaction

Term	Definition/Clarification
IM Investment	Refers to investments required to achieve IM-compliance, to include S&T, technology insertion, evaluation and qualification
IM Waivers	An approved deviation from the requirement for munitions containing energetic materials to be IM compliant issued by the JROC
Legacy Munition	Legacy munitions are all items in the inventory that are either in procurement or expected to be procured.
Linear Explosive Devices	A family of CAD items utilizing linear explosive energy to perform a work function
Net Explosive Weight (NEW)	The total weight of all high explosive and propellant
Non-Developmental Item (NDI)	Non-developmental items (NDI) are defined as any previously developed item of supply used exclusively for governmental purposes by a federal agency, a state or local government, or a foreign government with which the United States has a mutual defense cooperation agreement which requirements only minor modification
Office of Primary Responsibility (OPR)	"Office of Primary Responsibility" infers that the respective PEO has direct oversight responsibilities
Out-of-Cycle Munition Reviews	Munitions requiring review not included in the current IMSP that requires immediate procurement prior to the next IMSP cycle
Product Improvement Program	Program used to enhance/modify an exiting product to increase capability
Priority Munition	Should include all munitions and/or items containing energetic material as determined by the PEO to benefit from IM-improvement, based upon the prioritization criteria contained within the IMSP
Propellant Actuated Device (PAD)	A rocket powered device releasing controlled propellant energy to perform a work function
Tier I Munitions	Priority items that have fully funded POA&Ms.
Tier II Munitions	Priority items that do not have fully funded POA&Ms.
Tier III Munitions	Non-priority items that are being procured by another PEO, such as SMCA as the OPR, in which that activity has retained configuration Management authority
Tier IV Munitions	Non-priority items that are expected to be or procured by the reporting PEO
Tier V Munitions	Non-priority items with no further procurement and no window of opportunity anticipated
Tier VI Munitions	IM-compliant items that are being bought by a PEO or agency other than the reporting PEO (this is the IM-compliant equivalent of Tier 3)
Tier VII Munitions	IM-compliant items that the reporting PEO is buying (this is the IM-compliant equivalent of Tier 4)
Unfunded Requirement (UFR)	The aggregate of funding required, and unavailable, to develop and integrate technology, to include retrofitting, to obtain IM compliance
Urgent Materiel Release	An urgent materiel release (UMR) is predicated upon the need to field equipment to meet an urgent operational requirement in support of specific operations
Window of Opportunity	Potential windows of opportunity include: new contract awarded, exercise of contract options, PIP, Pre-planned Product Improvement(P3I), Service Life Extension

Term	Definition/Clarification
	Program (SLEP), maintenance, and spiral development efforts

Appendix F: Service IM Points of Contact

APPENDIX F: SERVICE IM POINTS OF CONTACT

Service Insensitive Munitions Points of Contact					
Service	**PEO**	**Primary**	**Phone**	**Alternate**	**Phone**
Army	Army, ASA (ALT)	Mike Peck	703-604-7222	LTC Ty Weaver	703-604-7209
	JSIMTP Member	Brian Fuchs	973-724-4772		
	PEO Ammo	Seham Salazar	973-724-2536	Robert Ho	973-724-3925
	PEO Soldier	Robert Zienowicz	973-724-4772		
	PEO MS	David Tritt	256-313-3431		
	PEO GCS	Steve Chico	973-724-4749		
Navy	JSIMTP Member	Don Porada	301-744-6020	Vicky Brady	760-939-7342
	ASN	Rick Ellis	703-6140-4582		
	OPNAV	Jim Coker	703-604-7673		
	PEO NAVAIR	Gardo Olea	301-757-6325		
	PEO SUB	Tom Molinski	401-832-1618		
	PEO IWS	Sarwat Chappell	540-653-6732	Rich Bowen	703 412-7616
	PEO LMW	Heather Gokee	301-744-4208	Paul Hagan	202-781-0617
USMC	JSIMTP Member	Scott Allred	703-432-3145	Troy Wright	703-432-3107
SOCOM	JSIMTP Member	William Andrews	941-359-2239	Carl Campagnuolo	941-359-2239
MDA	JSIMTP Member	Stephanie Wacenske	256-313-9753	Heather Simko	703-882-6254
Air Force	SAF/AQPW	Lt Col Mitchell	703-588- 7084	John Binkley	703-588- 7086
	JSIMTP Member	Stephen Struck	850-882-3911	Mitch Fleiszar	850-882-2964
	AF/PEO Weapons	Gene Estep	850-883-5908	Mitch Fleiszar	850-882-2964

Appendix G: US Army Policy

APPENDIX G: US ARMY POLICY

Army Regulation 70-1 and DA PAM 70–3 identify Army's acquisition policies. These documents assign responsibilities to Army organizations in accordance with DoDD 5000.1 and DoDI 5000.2.

AR 70-1, implements Department of Defense Directive 5000.1, The Defense Acquisition System, and Department of Defense Instruction 5000.2, "Operation of the Defense Acquisition System." It governs research, development, acquisition, and life-cycle management of Army materiel to satisfy approved Army requirements. It applies to major weapon and command, control, communications, and computers/information technology systems, non-major systems, highly sensitive classified acquisition programs, and clothing and individual equipment. In order of precedence it is the starting source for the management of Army acquisition programs following statutory requirements, Federal Acquisition Regulation, Defense Federal Acquisition Regulation Supplements, Department of Defense regulatory direction, and Army Federal Acquisition Regulation supplements.

DA PAM 70–3, this pamphlet provides advisory guidance on the materiel acquisition life cycle and overview of the acquisition management process. It is companion to Department of Defense Directive 5000.1, Department of Defense Instruction 5000.2, and Department of Defense 5000.2-M, and Army Regulation 70-1.

Memorandum, Assistant Secretary of the Army (Acquisition, Logistics, and Technology) (ASA(AL), Subject: Army Executive Agent for Insensitive Munitions, 26 April 2003, designates the ASA (ALT) Deputy for Systems Management (now the Deputy for Acquisition and Systems Management, SAAL-ZS) as the Army Executive Agent for Insensitive Munitions (AEA-IM).

Appendix G.1 Memorandum, Assistant Secretary of the Army (Acquisition, Logistics, and Technology) (ASA(AL), Subject: Army Executive Agent for Insensitive Munitions

DEPARTMENT OF THE ARMY
OFFICE OF THE ASSISTANT SECRETARY OF THE ARMY
ACQUISITION LOGISTICS AND TECHNOLOGY
103 ARMY PENTAGON
WASHINGTON DC 20310-0103

28 APR 2003

SAAL-SMA

MEMORANDUM FOR SEE DISTRIBUTION

SUBJECT: Army Executive Agent for Insensitive Munitions

References:

a. Memorandum, Assistant Secretary of the Army (Research, Development, and Acquisition) (ASA (RDA)), July 29, 1991, subject: Designation of an Army Executive Agent for Insensitive Munitions (IM).

b. Chairman of the Joint Chiefs of Staff Instruction (CJCSI) 3170.01B, April 15, 2001, subject: Requirements Generation System, paragraph 2b(3)(c), page B-4.

I hereby designate the Deputy for Systems Management in the Office of the Assistant Secretary of the Army (Acquisition, Logistics and Technology) as the Army Executive Agent for Insensitive Munitions (AEA-IM). The AEA-IM will serve as the single point of contact within the Army for IM activities and assure coordinated planning of the Army's IM program. The AEA-IM has the following responsibilities:

a. Provide overall IM program direction, budgetary planning, and coordination within the Army.

b. Coordinate with other Services on cooperative IM research, development, and acquisition efforts; and, inter-service transfers of IM technology. Determine if improved IM materials, designs, and processes developed or acquired by other Services should be integrated into Army munitions and weapons systems (i.e., when cost benefits, enhanced performance, and fielding objectives are promoted).

c. Review IM technology programs for the development and application of IM technologies. Coordinate with the Deputy Assistant Secretary for Research and Technology on basic and applied IM research and development matters, including funding and technology requirements.

d. Work closely with the Program Executive Officers (PEO) and Program/Project Managers (PM) for the development and execution of IM programs related to Army systems.

-2-

e. Review all Army IM waiver requests submitted to the Army Acquisition Executive (AAE) for approval by the Joint Requirements Oversight Council (JROC); recommend whether or not the AAE should forward each waiver request to the JROC for approval; and, review previously approved IM waivers on an annual basis. Per reference b., the JROC is the IM waiver approval authority.

f. Coordinate with the Joint Services on implementation of IM policy and on IM waivers.

g. Satisfy Congressional reporting requirements.

The reference a. memorandum is hereby rescinded.

We must ensure, to the extent practicable, that munitions under development or procurement are safe throughout development and fielding when subjected to unplanned stimuli. Support for IM programs by munitions and weapons platform PEOs and PMs will be necessary to ensure continued integration of IM technology into Army systems. Basic and applied technology research programs must be leveraged to support IM compliance efforts. The design features of munitions and weapons systems must be developed via a total systems approach that ensures that all combat system requirements are met while enhancing survivability to unplanned stimuli. The safety and survival of military personnel depends on us.

Claude M. Bolton, Jr.
Assistant Secretary of the Army
(Acquisition, Logistics and Technology)

DISTRIBUTION:
PROGRAM EXECUTIVE OFFICERS:
Air and Missile Defense, ATTN: SFAE-AMD, P.O. Box 1500, Huntsville, AL 35807-3801
Ammunition, ATTN: SFAE-AMO, Picatinny Arsenal, NJ 07806-5000
Aviation, ATTN; SFAE-AV, Redstone Arsenal, AL 35898
Chemical and Biological Defense, ATTN: CBD, Falls Church, VA 22041-3202
Combat Support and Combat Service Support, ATTN: SFAE-CSS, Warren, MI 48397-5000
Command, Control and Communications Systems, ATTN: SFAE-C3T, Fort Monmouth, NJ 07703-5401

-3-

Enterprise Information Systems, ATTN: SFAE-PS, Fort Belvoir, VA 22060-5526
Ground Combat Systems, ATTN: SFAE-GCS, Warren, MI 48397-5000
Intelligence, Electronic Warfare and Sensors, ATTN: SFAE-IEW&S, Fort Monmouth, NJ 07703-5301
Soldier, ATTN: SFAE-SDR, Fort Belvoir, VA 22060-5852
Tactical Missiles, ATTN: SFAE-MSL, Redstone Arsenal, AL 35898-8000
Simulation, Training and Instrumentation Command, 12350 Research Parkway, Orlando, FL 32826-3276

CF:
Commander, U.S. Army Materiel Command, 5001 Eisenhower Avenue, Alexandria, VA 22333-0001
Commander, Military Transportation Management Command, 200 Stovall Street, Alexandria, VA 22332
Commander, U.S. Army Joint Munitions Command (Provisional), Rock Island, IL 61299
Commander, U.S. Army Safety Center, Fort Rucker, AL 36362
Deputy Director, Strategic & Tactical Systems/Munitions, Office of the Under Secretary of Defense (Acquisition, Technology & Logistics), Room 3B1060, Pentagon, Washington, D.C. 20301-3090
Executive Director for Conventional Ammunition, ATTN: AMXED, 5001 Eisenhower Avenue, Alexandria, VA 22333-0001
Chairman, Department of Defense Explosives Safety Board, Room 856C Hoffman Building #1, 2461 Eisenhower Avenue, Alexandria, VA 22331-0600
Director for Logistics (J-4), The Joint Staff, ATTN: J4/SMPD, Room 2E828, 4000 Joint Staff Pentagon, Washington, D.C. 20318-4000
Director of Sustainment, Office of the Deputy Chief of Staff, G-4, ATTN: DALO-SMA, 500 Army Pentagon, Washington, D.C. 20310-0500
Chief, Insensitive Munitions Office, U.S. Army Defense Ammunition Logistics Activity, ATTN: AMSTA-AR-AL, Picatinny Arsenal, NJ 07806-5000

SAAL-ZS
SAAL-ZA
SAAL-ZL
SAAL-ZR
SAAL-ZP
SAAL-ZT

Appendix H: US NAVY POLICY

APPENDIX H: US NAVY POLICY

Appendix H.1 OPNAV Instruction 8010.13D, Department of the Navy Policy on Insensitive Munitions, 16 Aug 06

DEPARTMENT OF THE NAVY
OFFICE OF THE CHIEF NAVAL OPERATIONS
2000 NAVY PENTAGON
WASHINGTON,D.C. 20350-2000

IN REPLY REFER TO:

OPNAVINST 8010.13D
N86
16 Aug 06

OPNAV INSTRUCTION 8010.13D

From: Chief of Naval Operations

Subj: DEPARTMENT OF THE NAVY POLICY ON INSENSITIVE MUNITIONS

Ref: (a) 10 USC, Chapter 141, § 2389
(b) DODD 5000.1 of 12 May 2003
(c) CJCSM 3170.01B
(d) OUSD (AT&L) Memorandum of 21 Jul 2004, Insensitive Munitions (IM) Strategic Planning

Encl: (1) Insensitive Munitions Strategic Plan (IMSP) Key Elements

1. Purpose. To issue revised Department of the Navy Insensitive Munitions (DON IM) policy. This is a complete revision and should be reviewed in its entirety.

2. Cancellation. OPNAVINST 8010.13C.

3. Discussion

a. Insensitive Munitions are those munitions designed to fulfill their performance, readiness and operational requirements on demand, while minimizing the violence of their response to unplanned stimuli, such as heat, shock, and impact.

b. The term munitions refers to all non-nuclear energetic devices, including bombs, missiles, torpedoes, mines, pyrotechnic devices, demolition charges, rocket motors and other devices that utilize energetic materials. The energetic materials in these munitions produce the required propulsive power, fuzing and terminal effects to meet operational requirements. However, the intrinsic sensitivity of these materials also makes the munitions susceptible to initiation or ignition by unplanned stimuli. As a result of this sensitivity, munitions present a major threat to personnel and to the survivability of our ships and other weapons platforms, as well as our storage facilities and transportation modes. The United

States Congress recognized this and amended Public Law through the National Defense Authorization Act for Fiscal Year (FY) 2002, directing that munitions under development or procurement be safe throughout development and fielding when subject to unplanned stimuli (reference (a) refers).

4. Policy

a. The Department of Defense (DoD) IM policy, established in reference (b), requires that all systems containing energetics comply with insensitive munitions criteria. Reference (c) does the following:

(1) Sets forth guidelines and procedures for the operation of the Joint Capabilities Integration and Development System (JCIDS)

(2) Mandates JCIDS requirements documents for munitions, regardless of Acquisition Category (ACAT) level, contain the requirement to conform to IM (unplanned stimuli) criteria.

(3) Mandates IM waivers approved by the Joint Requirements Oversight Council (JROC) for all munition items not meeting this criteria.

(4) Requires that IM waiver requests include a Component or agency approved insensitive munitions Plan of Action and Milestones (POA&M) to identify how future purchases of the same system or future system variants will achieve incremental and full compliance.

(5) The Office of the Undersecretary of Defense, Acquisition, Technology and Logistics (OUSD (AT&L)) determined that, while the existing IM waiver process was effective, it was sub-optimized, limiting the JROC's view to individual munitions programs without insight or recognition of other related IM efforts or investment priorities. The policy was thus expanded, via reference (d), requiring Program Executive Offices (PEOs) with weapon responsibilities to develop and submit annual IM Strategic Plans (IMSPs) to the JROC and OUSD (AT&L). These plans serve to increase the visibility into the total PEO munitions portfolio and enable decisions to be made in a broader context.

b. All Naval munitions, without regard to ACAT level or source of origin (i.e., new procurements of legacy systems, R&D programs, Product Improvement Programs (PIPs), Non-Developmental Items, etc.) shall be designed to meet IM requirements, as specified by Commander, Naval Sea Systems Command (COMNAVSEASYSCOM) governing instructions. Operational capabilities must be attained without compromising system and platform safety. IM should be integrated using a systems safety approach (i.e. energetic materials, case and container design configurations, etc). Achieving IM compliance is not to be viewed as a one-time process for a program. This must be viewed over the program's entire life cycle. DoD acquisition policy specifies evolutionary acquisition strategies as the preferred approach to satisfying operational needs. Spiral development is the preferred process for executing such strategies. IM considerations must be included in these windows of opportunity that match available technology and resources, thus enabling the evolutionary acquisition strategies.

c. IM compliance shall be addressed at all milestone reviews for munitions programs. The ultimate objective is to design and deploy munitions that have no adverse reaction to unplanned stimuli.

d. The Navy's IM policy extends to all munitions, regardless of the source of design or manufacture, which are used, stored or transported aboard U. S. Navy ships, weapon platforms, weapon carriers, and munitions held at Naval shore activities. Every effort shall be made with other Services to ensure maximum compliance with the provisions of the references.

5. Action

a. The Director, Surface Warfare (N86) is the U.S. Navy's IM Executive Agent with responsibility for overseeing and coordinating the planning, funding, and execution of the IM program.

b. The OPNAV Insensitive Munitions Council (IMC) is established to assist the Surface Warfare Division in the execution of the IM program. The IMC shall be chaired by the Deputy of Surface Warfare (N86B) who shall coordinate IMC activities.

(1) Members of the Council are as follows:

(a) Assistant Secretary of the Navy, Research, Development & Acquisition (ASN RDA)

(b) Director, Supply Programs and Policy Division (N41)

(c) Director, Assessment Division (N81)

(d) Chairperson, Insensitive Munitions Coordination Group (SEA-00V), Naval Sea Systems Command

(e) Assistant Commander for Research and Engineering (AIR-4.0), Naval Air Systems Command

(f) Head, Aviation Plans and Requirements Branch (N880)

(g) Head, Submarine Weapons and Payloads Branch (N872C)

(h) Office of Naval Research (ONR)

(i) Program Manager for Ammunition, Marine Corps Systems Command (PM Ammo)

(j) Fleet user representation (Fleet Forces Command)

(2) Other participants (i.e., OSD, other Military Department or Service IM representatives, etc.) may be invited at the discretion of the IMC Chairperson.

(3) The IMC shall meet periodically, at least semi-annually or at the call of the Chairperson. Duties of the IMC shall include: OPNAV approval for DON IMSPs; coordination of the planning, funding, and execution of the IM program; development of Naval positions on requests for IM certifications and waivers; the conduct of reviews of other Services' PEO IMSPs; and other matters pertaining to IM. Council activities should be timed to provide support for programmatic and budgetary decisions by Principal OPNAV Officials.

(4) Reference (d) requires that PEO IM Strategic Plans

be co-signed by the appropriate Acquisition Executive and Comptroller (or Resource Sponsor), thus conveying a commitment to execution and funding. In order to minimize disruption to the PEO IM planning effort, and the time required for coordination and staffing, appropriate CNO Resource Sponsors shall certify that resources depicted in respective PEO IMSP are within the DON Budget. This certification shall be presented at the IMC meeting. IMC approval will thus constitute the only OPNAV endorsement required, allowing the plans to be forwarded directly to ASN (RD&A).

c. The OPNAV Insensitive Munitions Council Working Group (IMCWG) shall consist of the action officers designated by the IMC members. The IMCWG shall support the IMC by providing assistance when requested.

d. COMNAVSEASYSCOM, as the lead Systems Command for explosive materials, energetic materials and insensitive munitions, shall:

(1) Establish the Navy Insensitive Munitions Coordination Group (IMCG) to support the IMC in all aspects of planning and execution of the IM program, including consolidation and oversight of the IM Strategic Plans, plans of action and milestones (POA&Ms) for all munitions programs requiring waivers, and IM technology development efforts.

(2) Assign an IMC Executive Secretariat.

(3) Assign a representative to the IMCWG.

(4) Issue implementing instructions pertaining to the technical and program requirements for IM.

(5) Establish the Naval Ordnance Safety and Security Activity (NOSSA N83) as the Navy Insensitive Munitions Office (IMO). The responsibilities of the IMO shall include:

(a) Supporting the IMCG/IMC through establishment of an oversight process to identify munitions programs and the conduct of reviews to evaluate IM compliance.

(b) Managing and technically directing the Navy IM Advanced Development (IMAD) Program.

(c) Establishing and maintaining IMSP, waiver, POA&M and certification processes and procedures for IM consistent with policies established by DoD.

(d) Maintaining records of all IMSP, waivers, POA&Ms, and certifications. This includes waivers submitted by all Services/Components that require review by the IMC.

(e) Serving as the Navy lead in maintaining an active role in the DoD IM Integrated Process Team (IPT) including required participation in the Joint Services IM Technical Panel (JSIMTP).

(f) Serving as the Navy lead in the coordination and participation within the NATO Insensitive Munitions community.

e. Program Executive Officers/Program Managers (PEO/PM) shall identify their respective weapon programs that are subject to IM criteria via their IMSP. Military Departments are required to submit their respective plans to the JROC and OUSD (AT&L) by 15 February, annually. In order to provide adequate time for review and coordination of IMC activities, DON IMSPs shall be submitted to the IMC Executive Secretariat not later than 90 days prior to the OSD deadline. IMSP Key elements are provided in enclosure (1). For IMSP purposes, the Marine Corps has consolidated all IM-related activities under the Marine Corps Systems Command (MCSC), Program Manager for Ammunition (PM Ammo). Accordingly, all references in this instruction to PEOs shall also apply to PM Ammo.

(1) In-service munitions shall have a valid IM certification or waiver at all times throughout its lifecycle, but not later than Milestone C (Full Rate Production decision).

(2) Any departure from the policy provisions of this instruction must be approved by the IMC. While the IMSP is the vehicle to consolidate and submit IM waiver requests, PEOs will retain the flexibility to submit individual waiver requests, in the unusual case where such a request is needed, to meet specific urgent program milestones or warfighter requirements. These out-of-cycle requests will include the same information required of IMSPs (i.e., POA&M, schedule, funding requirements, etc.) for transition to IM-compliant status. Additionally,

justification of the need will be provided (i.e., Urgent Need Statement, etc.). A waiver may be requested only after a thorough evaluation of a munition shows that meeting the IM requirements is not feasible. All out-of-cycle waivers processed shall be reported in the next IMSP submission.

(3) The IMC will certify all Naval munitions, which meet IM technical requirements. A system description, IM test description and results, a technical assessment by the IMO, and a recommendation by the IMCG shall accompany a request for IM certification.

f. PEOs will take action to ensure that the policies within this instruction are implemented.

g. All implementing instructions will be reviewed and revised, as necessary, to conform with this instruction within 120 days from the date of issuance.

L. W. CRENSHAW, JR.

Distribution:
Electronic only, via Navy Directives Website
http://neds.daps.dla.mil

OPNAVINST 8010.13D
16 Aug 06

INSENSITIVE MUNITIONS STRATEGIC PLAN KEY ELEMENTS

1. Address Line. DON Insensitive Munitions Strategic Plans (IMSP) shall be addressed as follows:

From: Reporting Program Executive Office (PEO)
To: Assistant Secretary of the Navy, Research, Development & Acquisition (ASN RD&A)
Via: Chief of Naval Operations (N86B)

2. IMSP Key Elements. Each IMSP shall include as a minimum:

a. An Executive Summary that discusses the plan's key points and the methodology used in the development and decision process.

b. A complete list of all munitions (e.g., legacy, developmental, awaiting production, Advanced Concept Technology Demonstration (ACTD), Advanced Technology Demonstration (ATD), current inventory) for which that PEO has acquisition and lifecycle authority.

c. For each munition include:

(1) Munition characteristics including Naval Ammunition Logistics Code (NALC)/DoD Identification Code (DODIC), nomenclature, Mark and/or Mod, Net Explosive Weight (NEW), and energetic fills of each relevant component.

(2) Research, Development, Test and Evaluation (RDT&E) and procurement profile (funding and quantity across the FYDP).

(3) Baseline IM performance (known or predicted) for the IM threats per MIL-STD 2105C and the hazard classification (HC) assigned (interim or final).

(4) Ongoing and planned technology integration efforts aimed at IM improvement and HC reduction, and the funding supporting such efforts.

(5) New technologies required for achieving incremental and full IM compliance and the schedule for technology maturity.

Enclosure (1)

d. Munition system IM investment priorities and prioritization criteria.

e. Funded Service-specific and Joint investments to demonstrate and integrate new IM technologies.

f. All unfunded IM requirements.

From: Commander, Naval Sea Systems Command **DRAFT**

Subj: INSENSITIVE MUNITIONS PROGRAM PLANNING AND EXECUTION

Ref: (a) OPNAVINST 8010.13D

(b) STANAG 4439

(c) NAVSEAINST 8020.8B/TB 700-2

(d) DODD 5000.1

(e) CJCSI 3170.01F

(f) CJCSM 3170.01C

(g) OUSD (AT&L) Memorandum of 19 March 2007

(h) NAVSEAINST 8020.6E

(i) MIL-STD-2105C

(j) MIL-STD-882D

(k) NAVSEAINST 8020.5C

Encl: (1) Navy Coordinated Insensitive Munitions Strategic Planning Schedule

1. Purpose. To promulgate revised procedures and organization for planning and executing an integrated Navy Insensitive Munitions (IM) Program; to amplify IM Strategic Planning policy and guidance; and to revise the membership of the IM Coordination Group (IMCG). This is a complete revision and should be reviewed in its entirety.

2. Cancellation. NAVSEAINST 8010.5B.

3. Scope. This instruction applies to all Department of the Navy (DON) conventional munitions without regard to the source of design or manufacture. Excluded are nuclear weapons, which are subject to their own governing policy and directives.

4. Background

a. The Chief of Naval Operations (CNO) recognized that the survivability of ships, weapon platforms and munitions stockpiles could be improved by reducing the sensitivity of munitions, and issued the Navy's policy on Insensitive Munitions, reference (a). The Naval Sea

Systems Command is assigned as the Technical Authority for Explosives Safety; the Navy Lead Systems Command for Explosive Materials, Energetic Materials, and Insensitive Munitions; and is responsible for overall coordination of the Navy IM Program.

b. In accordance with reference (b), Insensitive Munitions are defined as, "Munitions which reliably fulfill their performance, readiness and operational requirements on demand, but which minimize the probability of inadvertent initiation and severity of subsequent collateral damage to the weapon platforms, logistic systems and personnel when subjected to unplanned stimuli." The ultimate objective is to design and field munitions that minimize adverse reactions to unplanned stimuli, analogous to Hazard Division 1.6 items as defined in reference (c).

5. Policy.

a. Reference (d) requires that all systems containing energetics comply with insensitive munitions criteria. Accordingly, this instruction applies to all DON munitions, regardless of Acquisition Category (ACAT), source of design or manufacture. Included are munition items being developed, those undergoing product improvements (Product Improvement Programs (PIP) and Preplanned Product Improvements (P3I)), those under evaluation, such as Foreign Comparative Test (FCT), Non Developmental Items (NDI), and those adapting Commercial Off-the-Shelf (COTS) technology or hardware.

b. References (e) and (f) establish the Joint Capabilities Integration and Development System (JCIDS) and describe its operation. All JCIDS documents relating to munitions shall incorporate the mandatory IM statement, "Munitions used in this system will be designed to resist insensitive munitions threats (unplanned stimuli)." Per reference (f), items not meeting the requirements for IM compliance will pursue a waiver of IM requirements that must be approved by the Joint Requirements Oversight Council (JROC).

c. The Office of the Undersecretary of Defense, Acquisition, Technology and Logistics (OUSD (AT&L)) adopted IM Strategic Planning as the process by which PEOs with munitions responsibilities capture and prioritize their entire munitions portfolio per reference (g). Insensitive Munitions Strategic Plans (IMSP) shall include the following key elements, as a minimum:

(1) An executive summary that discusses the plan's key points and the methodology used in the development and decision process.

(2) A complete list of all munitions for which the PEO has acquisition and lifecycle authority. The following information shall be provided for each munition:

(a) Munition characteristics including Mark and/or Mod, Net Explosive Weight (NEW), Naval Ammunition Logistics Code/Department of Defense Identification Code (NALC / DODIC)and energetic fills of each relevant component.

(b) Research, Development, Test and Evaluation (RDT&E) and procurement funding profiles across the Future Years Defense Plan (FYDP).

DRAFT

(c) Baseline IM performance for the IM threats per reference (h) and the Hazard Classification (HC) assigned.

(d) Ongoing and planned technology integration efforts aimed at IM performance improvement and HC reduction and the funding supporting such efforts.

(e) New technologies required for achieving full IM compliance and the schedule for technology maturity.

(3) Munition system IM investment priorities and prioritization criteria.

(4) Funded Service-specific and Joint investments that demonstrate IM technology relevant to the PEO's portfolio, which could be integrated into the PEO's munitions.

(5) All unfunded IM requirements.

(6) IM Plans of Action and Milestones (POA&M) for priority programs not meeting the criteria for IM compliance.

d. The IMSP is the vehicle for the PEO to consolidate and submit IM Waiver requests for those munitions not meeting the IM requirements. Reference (g) established a biennial IMSP submission schedule beginning with the FY2009/2010 plans. This policy does not alter the ability of a PEO, Service, Agency, or Component Command (COCOM) to submit an out-of-cycle IM Waiver request in the unusual case where such a request is needed to meet specific urgent programmatic milestones or documented urgent operational requirements in a timely manner. The IM POA&M is the most important document supporting the request for waiver. POA&Ms submitted as part of the IMSP or out-of-cycle submissions shall contain the same level of detail as stand alone waiver requests had in the past. Therefore, POA&M key elements and format apply to all waiver requests, regardless of the method of submission.

e. JROC approval of an IMSP only authorizes the procurement of items contained within the plan. The determination of safety and suitability for service use remains with the individual Service, Agency, or COCOM. Within DON, this responsibility is assigned to the Navy Weapon Systems Explosives Safety Review Board (WSESRB) per reference (h). The WSESRB is the Navy's independent oversight for safety compliance of all DON military munitions. IM is an integral part of the WSESRB oversight process, but a JROC-approved IMSP or out-of-cycle IM waiver must not be interpreted as tacit WSESRB approval for Service use. These are two distinct processes; the requirements of each must be met without detriment to the other.

f. Reference (a) established the Commanding General, Marine Corps Systems Command, Program Manager for Ammunition (PMM204), as the focal point for IM matters pertaining to the US Marine Corps Conventional Ground Ammunition (Class V (W)) inventory. Accordingly, only a single IMSP is required, recording all Marine Corps Class V (W) munitions.

6. Organization.

DRAFT

a. The Deputy Director, Surface Warfare Division, Office of the Chief of Naval Operations (CNO N86B) assisted by the OPNAV IM Council (IMC), established by reference (a), is responsible for overseeing and coordinating the planning, funding and execution of the Navy IM Program. Support is provided by the IM Coordination Group (IMCG), chaired by the Naval Sea Systems Command Deputy Chief Engineer (SEA 05A). In addition to the Chair, IMCG membership is as follows:

(1) CNO

(a) N411 – Supply, Ordnance & Logistics Operations Division.

(b) N864 – Warfare Systems Branch.

(2) Naval Air Systems Command (AIR-4.0).

(3) Naval Ordnance Safety and Security Activity (NOSSA).

(a) Executive Director N09.

(b) Insensitive Munitions Office (IMO) N83 – IMCG Executive Secretary.

(4) Commanding General, Marine Corps Systems Command – Program Manager for Ammunition (PMM204).

(5) Office of the Executive Director for Conventional Ammunition (O/EDCA).

b. Specific responsibilities of the IMCG are:

(1) Providing decision recommendations to the IMC on all IM-related documentation and policy matters requiring Service position.

(2) Evaluating overall weapon development program effectiveness in meeting IM requirements, and on the application of the best technology to produce effective Insensitive Munitions for the operating forces.

(3) Recommending funding necessary to execute IM initiatives.

c. The IMO, NOSSA N83, is designated as the lead activity for Navy technical and programmatic matters pertaining to IM. Authority is delegated to the IMO as the Navy review and approval agent for Navy munitions program Threat Hazard Assessments (THA) and IM test planning activities that are forwarded for approval as part of the Joint IM Test Standards and Compliance Assessment. Responsibilities include:

DRAFT

(1) Assisting the IMC Executive Secretary in all matters pertaining to the Council.

(2) Performing duties as IMCG Executive Secretary, by providing technical, programmatic and administrative support.

(3) Establishing a proactive oversight process in support of the IMCG and IMC and the conduct of periodic reviews to evaluate IM compliance per reference (i).

(4) Managing and technically directing the Insensitive Munitions Advanced Development (IMAD) Program.

(5) Serving as the Navy lead in the DOD IM Integrated Process Team (DOD IM IPT) including required participation in the Joint Services IM Technical Panel (JSIMTP), Joint IM Technology Program (JIMTP), and the NATO IM community.

(6) Assisting Navy PEOs with IMSP preparation, and acting as the focal point for coordination and IMSP staffing to the Navy Acquisition Executive, Joint Staff and OSD through the IMC.

(7) Developing and promulgating DON IM Strategic Planning Guidance. Key elements include: establishment and maintenance of processes and procedures for DON IM test planning/scoring in accordance with the Joint IM Test Standards and Compliance Assessment process, IMSPs, Waivers, THAs, and POA&Ms per DoD policy. This shall be reviewed at least annually.

(8) Maintaining records of all IMSPs, Waivers, and POA&Ms, to include those submitted by all Services, Agencies, and COCOMs that require review by the IMC.

(9) Providing oversight for the establishment and operation of all Navy official IM reaction scoring boards.

(10) Serving as the Navy's final approval authority for Navy THAs and Navy IM test plans prior to being staffed for Joint review and approval.

(11) Managing the energetics and explosives Qualification and Final (Type) Qualification program in accordance with reference (k).

d. The Naval Warfare Centers shall provide technical and programmatic support to the IMO for the IMAD Program. The Centers also provide technical support to Munitions Program Managers (PM) for the integration of IM technology to weapon development programs. IM Technical Coordinators shall be designated from the respective Warfare Centers to assist the IMO in particular areas of IM expertise.

7. Requirements.

DRAFT

a. In order to be effective, IM must be successfully integrated into a total systems safety program per reference (j). All energetic material must be qualified and undergo Final Type Qualification per reference (k).

b. Each munition item shall address Fast Cook-off (FCO), Slow Cook-off (SCO), Bullet Impact (BI), Fragment Impact (FI), Sympathetic Detonation (SD), and Shaped Charge Jet (SCJ) threats. In order to be considered IM-compliant, a munition item shall, at a minimum, meet the requirements of Table below.

IM Test	Test Parameters	Passing Criteria
Liqud Fuel Fired/Fast Cook-off (FCO)	STANAG 4240, Standard Procedure (Annex A)	No response more severe than Type V (Burning) reaction
Slow Heating/Slow Cook-Off (SCO)	STANAG 4382, Procedure 1	No response more severe than Type V (Burning) reaction or if no reaction occurs upon reaching 365°C (689°F)
Small Arms Attack/Bullet Impact	STANAG 4291, Procedure 1	No response more severe than Type V (Burning) reaction
Fragment Impact	STANAG 4496, Standard Procedure; Annex A, Standard Fragment fired with an impact velocity of 2,530 m/s (8,300 ft/s)	No response more severe than Type V (Burning) reaction
Sympathetic Reaction/Sympathetic Detonation (SD)	STANAG 4396 Standard Procedure	No propagation of reaction more severe than Type III (Explosion) reaction of like acceptor munitions
Shaped Charge Jet (SCJ) Impact	STANAG 4526, Procedure 2: Standardized 81mm precision shaped charge	No response more severe than Type III (Explosion) reaction

c. Items determined to meet the requirements for IM-compliance shall be addressed in the respective PEO IMSP. Individual IM Certification requests will no longer be addressed to the IMC.

d. IM Test Plans and THAs shall be prepared in accordance with the JROC-approved Standardized IM Test requirements and submitted through the appropriate IM review board to the IMO for Navy concurrence and subsequent staffing for Joint approval prior to commencing the IM test series. Test methodologies shall be based on the THA and Table 1 and coordinated with the Hazard Classification tests required by reference (c).

e. DoD IM Strategic Planning policy represents a major change in the manner by which the IM Program is managed and reported. Requirements are provided in reference (g). While these requirements provide general guidelines for IM Strategic Planning, they are neither detailed nor tailored to adequately address PEO-specific needs. Detailed requirements and guidance shall therefore be addressed by the IMO.

f. Munitions PMs are responsible for ensuring that the IM tests conducted meet the data requirements of reference (i) and applicable NATO STANAGs. IM test programs outsourced to industry shall comply with the provisions of this instruction with respect to IM THAs

DRAFT

and Test Plan approval. PMs shall ensure that contracts contain appropriate Data Item Descriptions (DID) per reference (i). A final test report will be submitted to the IMO by the Munitions PM after review by the lead Naval Warfare Center responsible for that particular weapon system's development and shall include documentation from the applicable review organization validating the test responses. Approved review organizations for the official scoring of test reactions include: the Naval Surface Warfare Center (NSWC) IM Review Board (IMRB), Naval Air Warfare Center – Weapons Division (NAWC-WD) Ordnance Hazards Evaluation Board (OHEB), the US Army IM Board (AIMB), and the US Air Force IM Technical Working Group (IMTWG).

8. Actions.

a. The Weapon PM, under cognizant PEO or Systems Command authority, shall seek every window of opportunity to incorporate appropriate technologies developed by the IMAD Program, similar programs of other services, and/or DoD contractors in order to provide IM-compliant munitions for the fleet.

b. The Navy IMO, NOSSA N83, is designated as the lead in the coordination of all IM-related matters. This includes all documents requiring JROC action. Coordination includes activities internal to DoD, such as the IMC, JSIMTP, Joint Staff, DoD Explosives Safety Board (DDESB), and OUSD (AT&L)/PSA, LW&M; as well as organizations external to DoD, such as the NATO Munitions Safety Information Analysis Center (MSIAC), MSIAC Member Nations, and Action Committee AC/326, as applicable.

c. Each PEO with weapon responsibilities shall develop and submit biennial IMSPs to the JROC and OUSD (AT&L) via CNO in coordination with the IMO. IMSPs shall address the entire PEO munitions portfolio to provide insight and recognition of all related IM efforts and investment priorities, enabling decisions to be made in a broader context. All out-of-cycle waiver requests shall be incorporated into the next submission of the IMSP.

d. Programs defined as priority by the respective PEO shall be briefed to the JSIMTP as part of the IMSP development process. PEOs/PMs shall coordinate subject briefings with the IMO prior to formal IMSP staffing. Due to depth of review required to obtain JROC approval, early coordination is crucial.

e. The IMSP process is overarching and may not correlate well to the continual IM efforts for a PEO's entire munitions portfolio. Munition programs shall therefore keep the IMO advised of the IM program status and brief the JSIMTP at regular intervals.

9. Schedule. Enclosure (1) identifies the significant events in the IMSP process. This schedule is aligned with the Navy Planning, Programming, Budgeting and Execution (PPBE) process, such that the IM program may influence the PPBE process to support coordinated IMSPs submitted to the Joint Staff (J-4/J-8) and OUSD (AT&L)/PSA, LW&M by the 15 February biennial date. The timelines of enclosure (1) are based on typical budget cycles and are thus guidelines for planning purposes. Periodically, CNO publishes detailed guidance and direction that takes precedence. The US Marine Corps has its own PPBE milestones, resource sponsor, and IMSP

DRAFT

approval authority. The PPBE requirements of the Marine Corps may vary accordingly but remain aligned with the DoD policy requirements.

10. These policies and procedures are effective immediately. Addressees shall comply with this instruction and support and assist the IMO and IMCG as required.

DRAFT

DATE	PURPOSE
Planning Year - Odd-numbered calendar years	
January – March	IMSP: Workshop – IMO to provide feedback from Joint IM Technology Program (JIMTP) and updates to IMSP policy/process; PEOs review POA&Ms for Tier I and II programs based on progress, validate new programs and ranking for priority status. Prepare updates to POA&Ms.
April – June	IMSP: Brief draft POA&Ms to the IMO, and JSIMTP; update as required.
July – September	IMSP: Finalize POA&Ms for Tier I and II programs, prepare and staff IMSP to IMO and JSIMTP. Incorporate comments, prepare final draft. PPBE: PEOs/PMs begin POM planning process. 1 September: CNO POM Issue Kickoff.
1 October	IMSP: Completed IMSPs to PEO for signature.
15 October	IMSP: Signed IMSPs submitted to IMO for staffing and coordination.
1 November	IMSP: Signed IMSPs received by CNO, N864. PPBE: Initial PEO/PM IM POM issues identified to CNO – Resource Sponsor.
1 December	IMSP: Read ahead comments and summary available from IMO for members of IMCG, IMC WG, and IMC.
10 December	IMSP: IMCG Meeting.
17 December	IMSP: IMC Meeting.
Submission Year – Even-numbered years	
January – March	PPBE: CNO Integrated Sponsor Program Proposal Review (ISPPR) meetings.
2 January	IMSP: CNO-endorsed IMSPs submitted to ASN (RD&A).

DRAFT

DATE	PURPOSE
Submission Year – Even-numbered years (continued)	
15 February	IMSP: IMSPs endorsed by the IMC and Navy Acquisition Executive submitted to Joint Staff (J-4/J-8) and OUSD (AT&L)/PSA, LW&M.
March – June	PPBE: Staffing, reviews, Joint Staff IM Working Group, Functional Capabilities Board (FCB), Joint Capabilities Board (JCB), Joint Requirements Oversight Council (JROC), etc.
May	PPBE: Navy Program Objective Memorandum (POM) submitted to OSD.
July	IMSP: Workshop – PEOs to identify concerns; IMO to provide updates from the review and approval processes, feedback, lessons learned, and changes to reporting criteria.
August – December	IMSP: PEOs continue to execute IM programs and provide feedback to IMO as required.
15 October	IMSP: Signed IMSPs submitted to IMO for staffing and coordination.
1 November	IMSP: Signed IMSPs received by CNO, N864. PPBE: Initial PEO/PM IM POM issues identified to CNO - Resource Sponsor.
1 December	IMSP: Read ahead comments and summary available from IMO for members of IMCG, IMC WG, and IMC.
10 December	IMSP: IMCG Meeting.
17 December	IMSP: IMC Meeting.

DRAFT

APPENDIX I: US AIR FORCE POLICY

APPENDIX I: US AIR FORCE POLICY

CHARTER

Nonnuclear Munitions Safety Board

Insensitive Munitions Technical Working Group

6 September 2001

1. PURPOSE: This charter establishes the Nonnuclear Munitions Safety Board (NNMSB) Insensitive Munitions Technical Working Group (IMTWG) to assist and act on behalf of the NNMSB with respect to its role in the Air Force IM program as required by DoD 5000.2-R.

2. MISSION: The IMTWG will serve as a source of expertise to advise the NNMSB on all matters pertaining to IM program management and technical requirements. In order to achieve timely responses to weapon acquisition program managers, item managers, the Air Force IM Panel and IM Board, Air Staff, and the other military services IM authorities, the IMTWG will act on behalf of and with the full authority of the NNMSB. These functions include reviews of the Threat Hazard Assessment (THA), IM test plans, assessment of IM test results, IM certification requests, and IM waiver requests. The IMTWG will also develop NNMSB recommendations on Air Force, DoD and NATO IM standards issues and policy development

3. MEMBERS AND PARTICIPANTS: The IMTWG shall consist of four principal members. The Chief, Weapons, Space and Nuclear Safety Division, HQ AFSC/SEW staff to serve as Chairperson of the IMTWG. The NNMSB Executive Secretary (Chief of Systems Safety, AAC/SES) shall serve as Secretary of the IMTWG. The Branch Chiefs of the air Force Research Laboratory Energetic Materials Branch (AFRL/MNME), and Motor Branch (AFRL/PRSB), or their appointed representatives, shall serve as the third and fourth principal members. When necessary to perform its functions, the IMTWG may request technical reviews, consultation, or other participation from NNMSB members MACOMs, through the NNMSB Executive Secretary. The NNMSB members will accomplish necessary coordination of such requests within their respective MAJCOMs, and will assure timely inputs to the IMTWG deliberations.

4. IMTWG FUNCTIONS AND RESPONSIBILITIES:

4.1. Advice and Assistance to Program Managers. The IMTWG will serve as a source of IM Technical advice for Program Managers for acquisition or sustainment of weapon systems. The IMTWG will be available for consultation with weapon acquisition program managers to facilitate effective, early integration of IM technical considerations into program planning and budgeting, scheduling, test planning, and design trade-off decision processes.

4.2 Technical Expertise and Standards Maintenance. The IMTWG will maintain current, in-depth knowledge of the IM policies, and technical standards of the Air Force and other military services, DoD and NATO. The IMTWG will provide the Air Force IM Panel and IM Board with comments and recommended Air Force positions in response to coordination of prospective new IM technical standards, including test requirements, procedures, instrumentation, interpretation of test results, and pass/fail criteria. The IMTWG may initiate such changes to technical standards as it deems appropriate. Regarding any prospective significant changes in broad IM policy, the IMTWG will prepare draft positions for consideration by the full NNMSB. The IMTWG will assist the NNMSB in maintaining Reference (a) by offering draft text to incorporate the NNMSB IM role.

4.3. Weapon-Specific Review Functions. The IMTWG will accomplish the NNMSB technical reviews of required submittals from acquisition program offices as follows:

4.3.1 Insensitive Munitions Plans. Reference (b) requires that the Program Manager for each munition acquisition and sustainment program document an IM Plan that includes an IM Test Plan and, when required, a THA. The IM Test Plan details how each of the IM tests provided in Reference (c) will be accomplished for the specific munition. It must describe specific test article configurations including packaging details, test bed layouts, procedures, instrumentation details, and may reflect harmonized protocols intended to also satisfy hazard classification and qualification test requirements. When one or more of the IM tests provided in Reference (c) are not included in the IM Test Plan, or parameters of the prescribed test stimuli are revised, those modifications must be supported by the THA. A THA is an assessment of unplanned stimuli to which the weapon might be exposed throughout the muniton life cycle, starting with production and continuing through demilitarization and disposal. The Program Manager will be required to coordinate the IM Plan with the IMTWG and, if required, present it to the NNMSB. The scope of the IMTWG review will be limited to determining if the proposed test procedures are adequate to yield the data necessary to support the assessment of IM compliance, and when applicable, if the THA accurately and completely considers all life cycle threat environments with respect to any stimulus met, the IMTWG will document its validation of the THA and a recommendation for IM Plan reflects consideration of available technology such as new candidate fill explosives and proven successful design features intended to limit the magnitude of unplanned reactions. Since the IM Plan may be a "living" document that may be revised periodically during the course of system design and testing, the IMTWG may review multiple submittals for a particular munition.

4.3.2. Test Reports. IM test results will be documented in formal test report(s) that analyze the data and summarizes results, including the initial assessment of reaction types as described in Reference (c). The test report will also include raw data (pressure/time curves for blast gages, temperature/time curves for thermocouples, other measurements, photographic documentation of results, high speed and normal speed videotape, and the like). The IMTWG will make the final determination of the type of reaction resulting from each test stimulus.

4.3.3. Certification Requests. A request for IM certification must include copies of all applicable IM review actions, the most recently approved Test Plan and THA, the formal IM test report(s), and any other pertinent documentation (e.g., hazard classification and qualification test reports). Copies of applicable previous review and approval correspondence must be attached.

The scope of the IMTWG review will be to assure that the submitted package is complete and that the package supports the conclusion that the munition complies with all applicable IM requirements. If so, the IMTWG will recommend IM certification. If not, the IMTWG will document specifics regarding the nonconforming characteristics that would require either remediation or a waiver of IM requirements.

4.3.4. Waiver Requests. The program manager must have obtained IM certification or must have obtained a waiver in accordance with the Air Force IM waiver process provided in Reference (b) prior to award of a production contract. The waiver request will include all documentation required for a certification request (see paragraph 4.3.3) as well as justification for requesting a waiver. The IMTWG will provide the AF IM Panel with the results of its technical review of each IM waiver request. The scope of the review shall include that the non-compliant characteristics are accurately and completely represented, any representation regarding the safety risks of fielding the non-compliant system as well as the benefits that would accrue by virtue of compliance, are supportable, representations regarding availability or non-availability of technical alternatives are correct, and plans for future improvement of IM characteristics are technically reasonable.

The results of the IMTWG review will not include any recommendations other than the technical assessment indicated above and will not offer conclusions or value judgments as to the merits of approval versus disapproval.

4.4 NNMSB Interface. In executive session at each formal meeting of the NNMSB, the Executive Secretary will summarize the minutes of any IMTWG deliberations to the NNMSB minutes. The IMTWG will assure the instructions for preparing Technical Munitions Safety Studies and Munitions Safety Analysis (Reference (a)) incorporate provisions for including IM Plan summaries and pertinent IM test results. A NNMSB recommendation for certification for operational use will address final certification for operational use.

5. ADMINISTRATIVE PROCEDURES:

5.1 To the extent feasible, all deliberations of the IMTWG shall be accomplished by electronic means, such as email, fax, conference calls, and video teleconferencing. When reliance on those modes of communication is not practical, mailed hard copies may be used. Travel in order to accomplish routine review actions will me minimized however, it is not ruled out, especially if meetings can be scheduled in conjunction with other events to which members travel expenses.

5.2 The Executive Secretary, NNMSB will serve as the initial NNMSB IM point of contact for muniton program managers as well as the IM authorities of the Air Force or other military services seeking NNMSB reviews of specific munitions, IM standards, or policy, procedural or technical issues. If the action is within the IMTWG scope of authority, the Executive Secretary, in the capacity of the IMTWG Secretary, will notify principal members and arrange for transmittal of review documents and other material (e.g., videotapes) to each member for action. If the action requires formal deliberation by the full NNMSB, the Executive Secretary will establish an agenda topic for NNMSB action in accordance with Reference (a) processes.

5.3 When the IMTWG is asked to review a submittal for a Joint Program, the Secretary will contact the appropriate IM authority of the other Service(s) to determine whether or not the other Service(s) has reviewed the submittal or come to any relevant conclusions regarding the munition that are not a matter of record in the submittal to the IMTWG. If there is pertinent information available regarding review by the other Service(s), the Secretary will include the information in the package transmitted to the other IMTWG members.

5.4 It is expected that the IMTWG will deliberate to arrive at unanimous positions on munitions reviews and technical or procedural issues. In addition, the IMTWG will attempt to resolve any controversial issue with the submitting organization. In the event the IMTWG cannot achieve agreement among the principal members or a mutual resolution with the submitting organization on a particular issue, the IMTWG chairperson will refer the issue, with all points of view represented, to the Chairman, NNMSB. In such a case, the Chairman, NNMSB will either adjudicate the matter and articulate the NNMSB position or will instruct the Executive Secretary to raise the issue as an agenda topic for formal NNMSB deliberation. The IMTWG Secretary will document the disposition of the review action or issue and state the NNMSB position in the form of IMTWG minutes. The IMTWG Secretary will obtain documented approval of the minutes by each of the principal members prior to publication. The IMTWG Secretary will distribute copies of the minutes to the Air Force IM Panel, the submitting organization, and the Chairman, NNMSB. Reviews should normally be completed within 45 working days except when unusual or controversial issues arise, or when an IMTWG meeting is required.

6. REFERENCES:

a. AFI 91-205

b. AF IM Management Plan

c. MIL-STD 2105B

DEPARTMENT OF THE AIR FORCE
WASHINGTON DC

12 OCT 2005

OFFICE OF THE ASSISTANT SECRETARY

05A-004

MEMORANDUM FOR SEE DISTRIBUTION

FROM SAF/AQ

SUBJECT: Establishment of an Air Force Insensitive Munitions Policy

References: (a) U.S. Code, Title 10, Subtitle A, Part IV, Chapter 141, Section 2389, "Ensuring safety regarding insensitive munitions"

(b) Under Secretary of Defense, Acquisition, Technology and Logistics USD (AT&L) memo "Insensitive Munitions (IM) Strategic Planning," 21 July 2004

(c) Chairman, Joint Chiefs of Staff Instruction (CJCSI) 3170.01E, "Joint Capabilities Integration and Development System (JCIDS)," 11 May 2005

(d) Chairman, Joint Chiefs of Staff Manual (CJCS Manual) 3170.01B, "Operation of the Joint Capabilities Integration and Development System (JCIDS)," 11 May 2005

(e) DoD Directive 5000.1, "The Defense Acquisition System," 12 May 2003

(f) MIL-STD-2105C, Department of Defense Test Method Standard "Hazard Assessment Test for Non-Nuclear Munitions," 14 July 2003

This memorandum establishes an interim Air Force (AF) Insensitive Munitions (IM) policy. Munitions survivability is crucial to the success of combat systems. The reactive nature of munitions makes them susceptible to degradation and destruction when exposed to stimuli such as fragment and fires. These reactions may cause significant damage to weapons, equipment, storage and transportation systems, as well as injury to personnel. IM will enhance system survivability by minimizing the likelihood and extent of potential damage resulting from unplanned munitions reactions. Design features will be developed and introduced via a total systems engineering approach that ensures all combat system requirements are met while enhancing survivability to unplanned stimuli. This memorandum provides the framework for implementing sections of references c, d, and e concerning IM.

In accordance with references a and b, the AF will establish procedures and organizational responsibilities for planning and carrying out an integrated AF IM program to include the annual submission of an AF IM Strategic Plan. The objective of the IM program is to ensure, to the extent practicable, all AF munitions are IM compliant.

SAF/AQ is the IM Executive for the AF. SAF/AQP will serve as the AF executive agent for IM and will develop the AF Policy Directive for IM. SAF/AQP will also transform the current draft AF IM Management Plan (attached) into the AF IM Guidebook. In the interim, the AF IM Management Plan, dated June 2005, will serve as guidance for implementation of IM in the AF.

The following responsibilities are assigned:

(a) AFPEO/WP will prepare and submit the annual AF IM Strategic Plan and all out-of-cycle IM waiver requests. The strategic plan will be submitted annually no later than 1 January.
(b) AF/XP and SAF/AQ will continue to co-sign the Annual AF IM Strategic Plan (per Reference b).
(c) The current ad hoc AF IM Board (SAF/AQP (Chair), SAF/AQR, AF/XOR, AF/ILM, and AF/ILP) will continue to serve in the interim. The board will review the strategic plan, IM certifications of AF munitions, and out-of-cycle AF IM waiver requests, making appropriate recommendations to the AF IM Executive.
(d) The current ad hoc IM Panel (SAF/AQPW (Chair), SAF/AQRT, AF/XORW, AF/ILMW; and AF/ILPR) will continue to serve in the interim. The panel will review the strategic plan, IM certifications of AF munitions, and out-of-cycle AF IM waiver requests, making appropriate recommendations to the AF IM Board. The panel will also review and coordinate on other service IM strategic plans and out-of-cycle waiver requests.
(e) The AF Nonnuclear Munitions Safety Board (NNMSB) and its IM Technical Working Group (IMTWG) will continue to serve as the AF IM technical advisory body. Reference f contains the technical standards for IM.
(f) The AF will continue to support the DoD IM Integrated Product Team (IPT) and its technical arm, the Joint Service IM Technical Panel (JSIMTP). SAF/AQPW will represent the AF on the DoD IM IPT. Through the DoD IM IPT, the AF will also support the NATO IM effort.

The OPR for this memorandum is SAF/AQPW, DSN 425-1260.

DONALD J. HOFFMAN, Lt Gen, USAF
Military Deputy, Office of the Assistant Secretary
of the Air Force (Acquisition)

Attachments:
1. Draft AF IM Management Plan, June 2005

DISTRIBUTION:
See Attached List

2

DISTRIBUTION LIST:

1. SAF/AQP
2. SAF/AQR
3. SAF/AQX
4. AF/ILM
5. AF/ILP
6. AF/XOR
7. AF/XPP
8. PEO/WP
9. AFSC/SEW
10. AAC/SES
11. AFRL/MNME
12. ACC/A8Z
13. AFRL/PRS

3

DRAFT

US AIR FORCE

INSENSITIVE MUNITIONS

MANAGEMENT PLAN

June 2005

DRAFT 1

DRAFT

Table of Contents

1. Purpose for the Insensitive Munitions (IM) Management Plan 3
2. Insensitive Munitions (IM) and the Air Force 3
3. Applicability and Basis for the Plan 3
4. Resources 5
5. Organizational Responsibilities in the Air Force 6
6. Joint and DoD IM Forums 8
7. Processes and Procedures for IM Management 8
   a. Annual USAF IM Strategic Plan Submittal Process 8
   b. USAF IM Certification Request Process 9
   c. Out-of-Cycle USAF IM Waiver Request Process 10
APPENDIX A: IM Strategic Plan Content Guidelines 12
APPENDIX B: Insensitive Munitions (IM) Certification Request Format 13
APPENDIX C: Insensitive Munitions (IM) Waiver Request Format 15
APPENDIX D: Plan Of Action and Milestones (POA&M) Content Guidlines 17

List of Figures

Figure 1: Annual USAF IM Strategic Plan Submittal Process 9
Figure 2: AF IM Certification Request Process 10
Figure 3: Out-of-Cycle USAF IM Waiver Request Process 11

DRAFT

1. Purpose for the Insensitive Munitions (IM) Management Plan

This IM plan will serve as interim guidance for preparing and submitting AF IM strategic plans, certification requests, and waiver requests. This plan will also establish and describe the Department of the Air Force procedures and organizational responsibilities for planning and carrying out an integrated Air Force Insensitive Munitions (IM) program. Initially the program will use incremental steps to achieve the goal of full IM certification of munitions. The ultimate objective of the IM program is to ensure USAF munitions attain full IM certification, which will ensure that USAF munitions will either not react or minimally react to unplanned stimuli while simultaneously not compromising the munitions' operational performance.

2. Insensitive Munitions (IM) and the Air Force

The large number and variety of munitions items, coupled with their inherent nature to react violently when exposed to unplanned stimuli, poses a potentially significant risk to safety and logistics and weapons system survivability. Implementation of this plan will provide several benefits attributable to IM munitions, including: war-fighting efficiencies such as increased weapons throughput and improved sortie generation, improved logistics link, improved replenishment, reduced real estate and lower Hazard Classification (HC). An additional benefit is increased survivability such as minimal collateral damage from threats and safer weapons inventory. Insensitive Munitions (IM) remain operationally effective in their intended application, but are less sensitive than their predecessors to extreme, but credible environments such as heat, shock or impact.

The Air Force has aggressively pursued development of IM technologies in USAF and Joint Service R&D and acquisition munitions programs. In the near term, the goal is to improve IM features of legacy weapons, even if only incrementally and for developmental weapons to establish a threshold requirement to be fully IM compliant when transitioned to production. The far-term goal is to achieve a fully IM-compliant inventory, especially in additional storage and handling benefits from reducing the HC and in time of conflict, reducing the vulnerability of munitions stockpiles during forward operations.

3. Applicability and Basis for the Plan

a. Applicability

Applies to all U.S. Air Force conventional munitions without regard to the source of design or manufacture. Ballistic missiles and nuclear weapons are excluded. As a threshold, each new weapon must meet insensitive munition criteria unless granted a specific waiver in accordance with DoD and USAF directives, policies, and guidelines. Munitions are as defined below.

Per JCS Joint Publication 1-02, "DoD Dictionary of Military and Associated Terms," a munition is a complete device charged with explosives, pyrotechnics, and an initiating composition for use in military operations. This definition includes bombs and warheads; guided missiles; artillery, mortar, rocket, and small arms ammunition; mines, torpedoes, and depth charges; pyrotechnics; clusters and

dispensers; cartridge and propellant actuated devices; electro-explosive devices; clandestine and improvised explosive devices; and all similar or related items or components explosive in nature.

b. Basis for the Plan

DoD policy and direction on making conventional weapons insensitive to unplanned stimuli such as fire, impact, and sympathetic detonation are contained in the documents cited below.

1) **U.S. Code, Title 10, Subtitle A, Part IV, Chapter 141, Section 2389,** ***"Ensuring safety regarding insensitive munitions".*** The code states "The Secretary of Defense shall ensure, to the extent practicable, that insensitive munitions under development or procurement are safe throughout development and fielding when subject to unplanned stimuli".

2) **Under Secretary of Defense, Acquisition, Technology and Logistics OUSD (AT&L) memo "*Insensitive Munitions (IM) Strategic Planning*," 21 July 2004.** The memo establishes DoD policy for the submission of IM strategic plans to the JROC. It also states that PEOs with weapon responsibilities will be responsible for developing and submitting the plan annually and it states that the plan will be co-signed by the service's acquisition executive and resource sponsor. The plans will also serve as consolidated waiver requests.

3) **Chairman, Joint Chiefs of Staff Instruction (CJCSI) 3170.01E, "*Joint Capabilities Integration and Development System (JCIDS),*" 11 May 2005, and Chairman, Joint Chiefs of Staff Manual (CJCS Manual) 3170.01B, "*Operation of the Joint Capabilities Integration and Development System (JCIDS),*" 11 May 2005**. The documents specify that the Joint Staff will provide review, coordination and certification functions in support of the JCIDS process, to include munitions insensitivity certification. They also specify that the Joint Staff /J-8 Deputy Director for Force Protection (DDFP) will grant IM certifications and will certify that all Capability Development Documents (CDDs) and Capability Production Documents (CPDs) for munitions, regardless of acquisition category (ACAT) level, contain the requirement to conform to insensitive munitions (unplanned stimuli) criteria. As a minimum, these CDDs and CPDs will contain the statement "Munitions used in this system will be designed to resist insensitive munitions threats (unplanned stimuli)."

The documents further state insensitive munitions waiver requests require approval by the Joint Requirements Oversight Council (JROC). Insensitive munitions waiver requests shall include military service or agency approved insensitive munitions plan of action and milestones (POA&M) to identify how future purchases of same or future system variants will achieve incremental and full compliance. Waiver requests will be submitted to the Joint Staff/J-4 for staffing with the Joint Service IM Technical Panel (JSIMTP), OUSD

(AT&L) and Services for review and then forwarded to the JROC secretariat in parallel with JCIDS staffing through Knowledge Management/Decision Support (KM/DS) of the CDD/CPD. A request for waiver will be brought to the DDFP through the appropriate Functional Capabilities Board (FCB). The FCB will evaluate the waiver request and the DDFP will recommend approval or disapproval to the JROC.

4) **DoD Directive 5000.1, "*The Defense Acquisition System,*" 12 May 2003, Encl. 1, para. E1.23 Safety**. "Safety shall be addressed throughout the acquisition process. Safety considerations include human (includes human/system interfaces), toxic/hazardous materials and substances, production/manufacturing, testing, facilities, logistical support, weapons, and munitions/explosives. All systems containing energetics shall comply with insensitive munitions criteria."

5) **MIL-STD-2105C / STANAG 4439** " ***Hazard Assessment Tests for Non-Nuclear Munitions***. MIL-STD 2105C/STANAG 4439 covers test procedures and criteria for assessing IM performance and associated safety. Provides the framework for a consolidated safety and IM test program. Criteria must be met for full certification unless a Threat Hazard Assessment supports deviation from this baseline testing. Threat Hazard Assessments are conducted as an integral part of the IM certification process. The purpose of a THA is to evaluate over the munitions life cycle the threats and hazards to which the munitions may be exposed, including threats posed by friendly munitions, enemy munitions, accidents, handling, and storage. The THA results may support a deviation from the IM criteria in MIL-STD-2105C for certification of a munition. The entire operational environment of the munition must be examined to include the packaging, transportation, and storage of the munition at depot level, end user tactical storage facilities, and in operational use configuration storage, aircraft loading, and loaded aircraft parking. An approach to reduce or eliminate the hazards must also be determined and a technology or other means defined. The THA provides an assessment of the weapon's threat environment, is validated by the IM Technical Working Group (IMTWG) and, if required, is presented to the IMTWG's chartering organization, the Non-Nuclear Munitions Safety Board (NNMSB), for review and comment.

   MIL-STD 2105C/STANAG 4439 includes basic safety tests and IM tests. The basic safety tests include temperature and humidity, vibration, and 12-meter drops. The IM tests are fast cook-off, slow cook-off, bullet impact, fragment impact, sympathetic detonation, and shaped charge jet impact. An insensitive munition must still meet operational requirements while minimizing the probability of inadvertent detonation and resultant damage to materiel and people.

4. Resources

There should be no need for a separate or dedicated organization to administer the Air Force IM program. Funding for IM work for an individual munitions program will be

DRAFT

funded by that program. IM development with an across the board application will be funded under appropriate existing Program Elements (PEs) reflecting the level of technology maturity.

5. Organizational Responsibilities in the Air Force

Air Force IM Executive

SAF/AQ will establish IM policy for the Air Force.

SAF/AQ, along with AF/XP, will sign and forward the annual IM Strategic Plan to the Joint Staff.

If applicable, review and forward AF IM certification requests and IM waiver requests to the Joint Staff.

Air Force Resource Sponsor

AF/XP, along with SAF/AQ, will sign and forward the annual IM Strategic Plan to the Joint Staff.

Air Force Executive Agent for IM

SAF/AQP will review and forward AF IM certification requests and IM waiver requests to the Joint Staff and, if applicable, recommend such actions to the AF IM Executive.

Interface with Army and Navy IM Executive Agents through OUSD (AT&L).

Oversee the Air Force IM program, including technology efforts.

Interface with OSD and JCS on major IM matters.

Chair the Air Force IM Board.

SAF/AQR

Oversee AF IM technology efforts.

Air Force IM Board

Consists of SAF/AQP (Chair & Air Force Executive Agent for IM), SAF/AQR, AF/ILM, AF/ILP, and AF/XOR.

Recommend certification of munitions that meet IM requirements.

Review the AF IM strategic plan (AF/XPP will coordinate on the plan).

Make recommendations to SAF/AQ, through the Air Force IM Executive Agent, on IM policy and directives.

Recommend disapproval of out-of-cycle waiver requests or recommend forwarding to the JROC for final approval.

Air Force IM Panel

Consists of SAF/AQPW (Chair & Air Force Secretariat for IM), SAF/AQRT, AF/ILMW, AF/ILPR, and AF/XORW.

SAF/AQPW, AF/ILMW, and AF/XORW are also members of the DoD IM IPT.

Review and make recommendations to the IM Board on the AF IM strategic plan (AF/XPPC will coordinate on the plan), out-of-cycle waiver requests, certification requests, IM policy and IM organizational responsibility changes.

Coordinate on IM waiver requests of the Army and Navy as requested by the JCS/J-4 (forward to the Air Force IM Board only in instances of major impact to the Air Force).

Assure Air Force membership on the DoD IM IPT and the Joint Services IM Technical Panel (JSIMTP).

AFPEO/WP

Prepare and submit the annual Air Force IM Strategic Plan.

Approve and submit out-of-cycle waiver requests.

SAF/AQPW (or its succeeding organization)

Serve as Air Force IM Secretariat and chair the IM Panel.

Maintain records of all Air Force IM waivers, waiver requests, certifications, IM plans, and management/administrative matters.

Advise program managers on procedures and processes for complying with DoD and Air Force policies and directives on IM.

Monitor activities of the Joint Services IM Technical Panel on IM strategy plans of munitions programs, IM development/acquisition efforts, and waiver requests.

Non-Nuclear Munitions Safety Board (NNMSB)/IM Technical Working Group (IMTWG)

Develop recommendations on Air Force, DoD, and NATO IM standards, issues, and policy development.

Formally score IM test results.

Review the Threat Hazard Assessment (THA); the IM Test Plan, IM test results; IM certification requests; and IM waiver requests and forward recommendations to the Chairman of the Air Force IM Panel (SAF/AQPW).

DRAFT

Program Managers (Acquisition and Sustainment)

Prepare IM strategy and plans for all new non-nuclear weapons acquisition (to include the THA when required. THA format can be found in DI-SAFT-81124).

Prepare an IM certification package for fully compliant munitions.

Develop a program specific for munitions that do not fully meet IM criteria as delineated in the THA.

Prepare IM waiver requests, including the POA&M, for munitions that do not fully meet IM criteria.

Assure all legacy munition buys include insensitive munition requirements and prepare waivers if IM criteria cannot be currently met.

Include IM in Acquisition Strategy Plans, Systems Acquisition Management Plans, and TEMPs.

Update IM plan at all acquisition phase milestone reviews (or equivalent reviews for programs not requiring major milestone reviews).

Review configuration changes for use of IM parts, components, and systems.

6. Joint and DoD IM Forums

DoD IM Integrated Product Team (DoD IM IPT)

Chaired by OSD (Deputy Director, Land Warfare and Munitions [OUSD (AT&L)/DS, LW&M]

Establish DoD IM policy

Oversee IM implementation across DoD

Air Force membership

Joint Service IM Technical Panel (JSIMTP)

Chaired by the Services on a two year rotation cycle

Technical advisors to the DoD IMIPT, JCS/J-4, program and system managers on IM strategy and IM program development

Air Force membership

7. Processes and Procedures for IM Management

Three processes have been generated to accommodate the various IM activities; generating and approving the yearly IM Strategic Plan, requesting IM certification, and requesting an out-of-cycle IM waiver.

a. Annual USAF IM Strategic Plan Submittal Process

DRAFT 8

DRAFT

1) In July 2004, OUSD (AT&L) issued a memorandum requiring PEOs with weapons responsibilities to develop and submit annual IM strategic plans to the JROC and OUSD (AT&L). The strategic plan will be the vehicle to submit and consolidate IM waiver requests and to update munitions management plans on a yearly basis. Guidelines for the strategic plan content are in Appendix A.
2) This annual process is outlined in Figure 1 and must be initiated in time to support submittal of the plan to the JROC approval by 15 February of each year.
3) PEO/WP will consolidate all munitions IM plans, waiver requests and POA&Ms (if applicable) into a Service Level IM Strategic Plan. PEO/WP will forward the strategic plan to the Air Force IM Secretariat (SAF/AQPW) for review by the IM Panel, AF/XPPC, SAF/AQRT, and the NNMSB.
4) SAF/AQPW will then submit the strategic plan to the IM Board, AF/XPP and SAF/AQR for review.
5) From there, SAF/AQPW will present it to the AF Acquisition Executive (SAF/AQ) and the AF Resource Sponsor (AF/XP) for signature.
6) After the plan has been signed, it will be forwarded to the Joint Staff for review and approval by the JROC.

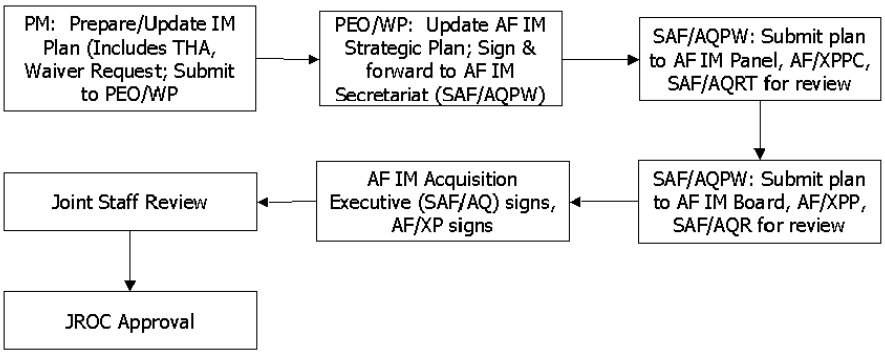

Figure 1: Annual USAF IM Strategic Plan Submittal Process

b. USAF IM Certification Request Process

1) The format for the IM Certification Request is at Appendix B and the AF IM Certification Request Process is outlined in Figure 2.
2) The program manager initiates the process by preparing the Certification Request. If the program is joint with the US Navy, then the program manager will also provide the Certification Request to the USN IM Office (IMO) for coordination through the Navy process.
3) The request is submitted to the NNMSB/IMTWG for review and comment.
4) The NNMSB/IMTWG will forward the request along with any comments to SAF/AQPW.

DRAFT 9

DRAFT

5) SAF/AQPW will coordinate the request through the AF IM Panel and then the AF IM Board.
6) The Panel and/or the Board may forward the request to the JSIMTP for a technical assessment.
7) When the Panel and then the Board approve the request, SAF/AQPW will present it to the AF Acquisition Executive (SAF/AQ) for signature.
8) After SAF/AQ and if required, the Navy IMO, signs the request, it will be forwarded to the Joint Staff for review and approval.

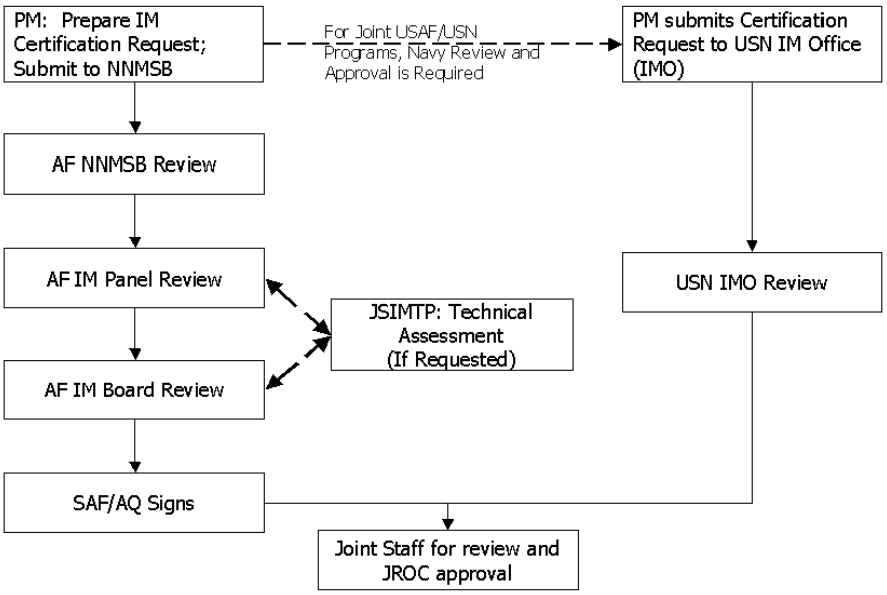

Figure 2: AF IM Certification Request Process

c. Out-of-Cycle USAF IM Waiver Request Process

1) In the event that an IM waiver is needed to meet specific urgent program milestones in a timely manner, individual requests can be submitted out-of-cycle. The Out-of-Cycle USAF IM Waiver Request Process is outlined in Figure 3.
2) The program manager prepares the waiver and a POA&M. The waiver request format can be found in Appendix C and some guidelines for POA&M content can be found at Appendix D. If the program is joint with the US Navy, then the program manager will also provide the Waiver Request to the USN IMO for coordination and approval through the Navy process.
3) The program manager submits the information to the NNMSB/IMTWG for review and comment.

DRAFT 10

DRAFT

4) The NNMSB/IMTWG forwards the waiver and supporting information to SAF/AQPW for routing through the AF IM Panel and AF IM Board.
5) After concurrence from both the panel and the board, SAF/AQPW presents the information to SAF/AQ for final concurrence.
6) After SAF/AQ and if required, the Navy IMO, signs the request, it will be forwarded to the Joint Staff for review and approval.

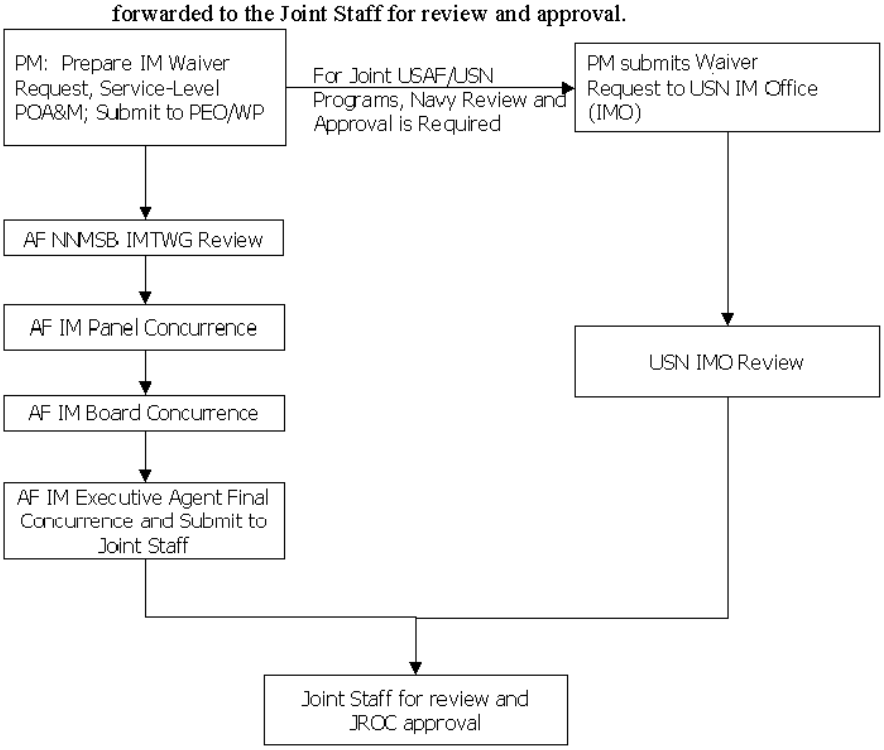

Figure 3: Out-of-Cycle USAF IM Waiver Request Process

DRAFT 11

DRAFT

APPENDIX A: IM Strategic Plan Content Guidelines

1. Use the Air Force Insensitive Munitions (IM) Strategic Plan (February 2005) as a guide for preparing subsequent strategic plans.
2. Each subsequent strategic plan should build upon the previous plan submitted. The plan must include a list of programs requesting an IM waiver and a list requesting IM certification. POA&Ms previously submitted need to be updated and included in the strategic plan.
3. Any new waiver requests also require the submittal of a POA&M.
4. In general, the strategic plan should consist of the following sections:
   a. Introduction – Discuss the PEO's overall approach to managing IM and achieving IM compliance. Describe any recent IM success stories the PEO programs may have achieved since the last submittal.
   b. Top Priority Munitions – This section should consist of a prioritized list of PEO weapons programs that will benefit the most from the insertion of IM technology. For each program on the list include; a brief description of the munition, an overview of IM technology, and a program quad chart. The quad chart should include the program's baseline and intermediate IM performance, an IM milestone schedule, and the IM funding investment in the program. This section should address which programs on the prioritized list will include a POA&M. For the remaining programs that are not IM certified, this section will also state why a POA&M for each is not required.
   c. Technology Investment Efforts – Provide a status on the IM technology efforts being pursued by the PEO's programs as well as technologies being explored by other agencies that may benefit AF IM efforts.
5. The strategic plan needs to be signed by AF PEO/WP as the submitter. Upon completion of Air Force coordination (in accordance with paragraph 7 a in this plan), the strategic plan will be signed by USAF/XP and SAF/AQ.

DRAFT

APPENDIX B: Insensitive Munitions (IM) Certification Request Format

Program Manager or Item Manager/Developer: Name, Address, Phone, Fax, E-mail

Munition: Name and Nomenclature

Weapon Description: Describe the system, labeling energetic components. Use of figures, schematics, and pictures is encouraged.

Summary of Test Results: Use the following format. Must pass as a total system, as delineated in the Threat Hazard Assessment (THA) and MIL-STD-2105C (STANAG 4439).

Test	Pass Criteria	Results
Fast Cook-Off		
Slow Cook-Off		
Bullet Impact		
Fragment Impact		
Sympathetic Detonation		
Shaped Charge Jet Impact		

Test Results Reviewed By: e.g., IM Technical Working Group of the Nonnuclear Munitions Safety Board

References or Other Information to Support the Request: Test Reports, Weapon History, etc.

DRAFT 13

DRAFT

Signature Page: *IM Certification Request*

Program Manager: _____ _____
Signature **Date**

Air Force IM Panel Recommendation

Approval/Disapproval: _____ _____
Signature **Date**

Comment:

Air Force IM Board Recommendation

Approval/Disapproval: _____ _____
Signature **Date**

Comment:

Air Force Executive Agent for IM

Approval/Disapproval: _____ _____
Signature **Date**

DRAFT 14

DRAFT

APPENDIX C: Insensitive Munitions (IM) Waiver Request Format

Introduction:

Description: Describe the system, labeling energetic components. Use of figures, schematics, and pictures is encouraged.

Summary of Test Results: Use the following format. Must pass as a total system, as delineated in the Threat Hazard Assessment (THA) and MIL-STD-2105C (STANAG 4439).

Test	Pass Criteria	Results
Fast Cook-Off		
Slow Cook-Off		
Bullet Impact		
Fragment Impact		
Sympathetic Detonation		
Shaped Charge Jet Impact		

Test Results Reviewed By: e.g., Non-Nuclear Munitions Safety Board IMTWG

Threat Hazard Assessment Summary:

Hazard Classification Test Results Summarized:

Actions Required to Make Munition Insensitive:

Other Pertinent Data: Test Reports, Munition History, etc

Rationale for the Waiver Request:

DRAFT 15

DRAFT

Signature Page: *IM Waiver Request*

REQUEST FOR WAIVER OF
INSENSITIVE MUNITIONS REOUIREMENTS

MUNITION:

OFFICE OF PRIMARY RESPONSIBILITY (OPR):

PURPOSE OF WAIVER REQUEST:
Obtain a waiver for Insensitive Munitions Requirements for fielding of the _____

Submitted by:

_____
Program Manager/Director

_____(Name)_____
Program Executive Officer for Weapons

Recommendation: Approval/Disapproval
Signature_____Date_____
Comment:

_____(Name)_____
Director, Global Power Programs
Assistant Secretary (Acquisition)

Recommendation: Approval/Disapproval
Signature Date
Comment:

DRAFT 16

DRAFT

APPENDIX D: Plan Of Action and Milestones (POA&M) Content Guidelines

1. The purpose of the POA&M is to describe the steps the program will take to achieve IM certification. Use the POA&Ms submitted with the February 2005 AF IM Strategic Plan as a guide.
2. The POA&M should include the following sections:
   a. Introduction – Describe the purpose of the POA&M
   b. Program Management – List key organizational points of contact and their purpose.
   c. System Description – Identify key features and, if applicable, describe the main differences between the baseline system and the IM-enhanced system.
   d. Threat Hazard Assessment (THA) Summary – Describe the approach to be used to assess the threats present during the munition's life cycle. Summarize the conclusions reached in the THA.
   e. IM Test Results – Discuss the IM tests that have been/will be conducted on the baseline munition. Present the results of these tests. After insertion of the planned IM technology, list the predicted IM test results
   f. Proposed Solutions – Describe the IM technology tasks to be completed for the program and the program phase in which the technology will be inserted.
   g. Schedule – Present a schedule that shows the various phases and milestones of the proposed IM effort.
   h. Funding – List by FY the amount and type of funds available for the proposed IM effort.
   i. Buy/Procurements – Show the planned munitions buy over the FYDP.
3. The project/program manager and the program director should sign the POA&M. AF PEO/WP will sign upon concurrence.

APPENDIX J: US SPECIAL OPERATIONS COMMAND (USSOCOM) POLICY

U.S Special Operations Command (USSOCOM) established the USSOCOM IM Board. This IM Board reviewed all test plans and data for weapons, ammunition and explosives that require IM review and approval. The Board will coordinate IM approvals or waivers with the Joint Staff for final Joint Requirements Oversight Council (JROC) approval. In addition, USSOCOM has requested the Acquisition and Technology Programs Task Force (ATP TF) to charter an Integrated Product Team (IPT) to develop a DoD roadmap for a joint system safety release/certification process.

APPENDIX K: MISSILE DEFENSE AGENCY POLICY

APPENDIX K: MISSILE DEFENSE AGENCY POLICY

CHARTER FOR THE MISSILE DEFENSE AGENCY

INSENSITIVE MUNITIONS BOARD

1. PURPOSE: To establish the Insensitive Munitions (IM) Board to accomplish the coordination of IM technical and programmatic matters within the Missile Defense Agency (MDA) and among collaborating Services of the Department of Defense (DoD).

2. REFERENCES: (a) United States Code, Title 10, Chapter 141, Section 2389

(b) DODD 5000.1, The Defense Acquisition System, dated 12 May 2003

(c) CJCSM 3170.01, Operation of the Joint Capabilities Integration and Development System, dated 24 June 2003

(d) MDA Integration Board (MIB) Meeting of 10 November 2003

3. BACKGROUND: Reference (a) requires the Secretary of Defense to ensure, to the extent practicable, that insensitive munitions under development or procurement are safe when subjected to unplanned stimuli. Reference (b) delegates enforcement of this requirement to the DoD Services. Reference (c) assigns responsibility to the Joint Staff J-4 to certify that acquisition documentation for munitions conform to IM criteria and delegates authority to approve IM waivers to the Joint Requirements Oversight Council (JROC).

Program Managers (PMs) have chartered responsibility for total life-cycle management of their assigned systems. Oversight of the implementation of IM requirements is exercised by the Services' IM Executives, supported by IM Boards or Councils and IM Offices. At reference (d), the MIB named MDA's Technical Director (DT) the IM Executive; the office of the Director for Safety, Quality and Mission Assurance was designated the IM Office (IMO); and the IM Executive was tasked with recommending whether an IM Board is needed. The IM Executive has determined that an IM Board is required.

This charter establishes the MDA IM Board to ensure the implementation of IM requirements across all ballistic missile defense guided missile programs and to serve as a vetting process for IM issues.

4. MEMBERSHIP: The IM Board Membership shall consist of:

a. MDA Technical Director (IM Executive and IM Board Chair)

b. BMDS Executive Officer (DB)

c. Director, Program Integration (PI)

d. Director, System Engineering and Integration (SE)

e. Director, Test and Assessment (TE)

f. Director, Force Structure Integration and Deployment (TR)

g. Director, Safety, Quality and Mission Assurance (QS) and IM Office (IMO)

h. Deputy Director for Safety and QS Lead for IMO (QSS)

i. Other participants as required.

5. GOALS, OBJECTIVES AND SCOPE: The MDA IM Board will carry out the following functions with the technical, programmatic and administrative support of the IMO:

a. Review and approve QS oversight of MDA's programs for compliance with the requirements of references (a) through (c).

b. Oversee and approve QS coordination of IM planning and execution among MDA elements of the Ballistic Missile Defense System (BMDS).

c. Collaborate with the Services' IM Boards/Councils especially in support of MDA programs that have been under the Services' IM review processes.

d. Approve the coordinated MDA element programmatic and budgetary information supplied to the Office of the Secretary of Defense (OSD) for IM matters.

e. Publish an annual fiscal year report summarizing the activities and status of the IM program.

f. Review MDA IM waiver requests and plans of action and milestones, make recommendations for further action, and, if approved by the IM Executive, forward them to the Joint Staff for review and approval.

6. PRODUCTS: The IM Board will provide the facts, assessments and recommended strategies to enable the IM Executive to make approvals and decisions. These outcomes will be published in the minutes of the board meetings. An annual fiscal year report will summarize the activities and status of the IM program.

7. MEETING TIMES:

a. Quarterly meetings, as necessary, in order for active MDA IM elements to present IM program status.

b. The IM Board will also conduct meetings, as required, to assist MDA elements to complete preparations for IM presentations, waiver requests and plans of action and milestones.

c. MDA elements will brief the IM Board on their IM status at least annually.

8. CONCEPT OF OPERATIONS:

a. The IM Executive has tasking authority, while the IMO will establish a time-specific agenda for meeting IM requirements throughout MDA.b. The use of MDA Task Manager will identify and track all MDA IM Board issues and program reviews.

c. MDA QSS will publish and distribute minutes.

d. MDA QSS will schedule meeting location, after previous coordination with MDA DT.

e. Travel Requirements: TBD

f. Meeting Classification: Unclassified, unless previously directed.

g. Special Requirements -VTC, MIC, etc.: TBD

h. Related or Similar Groups w/in MDA/BMDS: None

i. Sunset Clause Recommendation: This group is in support of IM law and will be in existence indefinitely. 7. IMPLEMENTATION: This charter is effective immediately.

8. POINT OF CONTACT: The point of contact for this charter is Mike Wadzinski, (703) 822-6362, email mike.wadzinski@mda.osd.mil

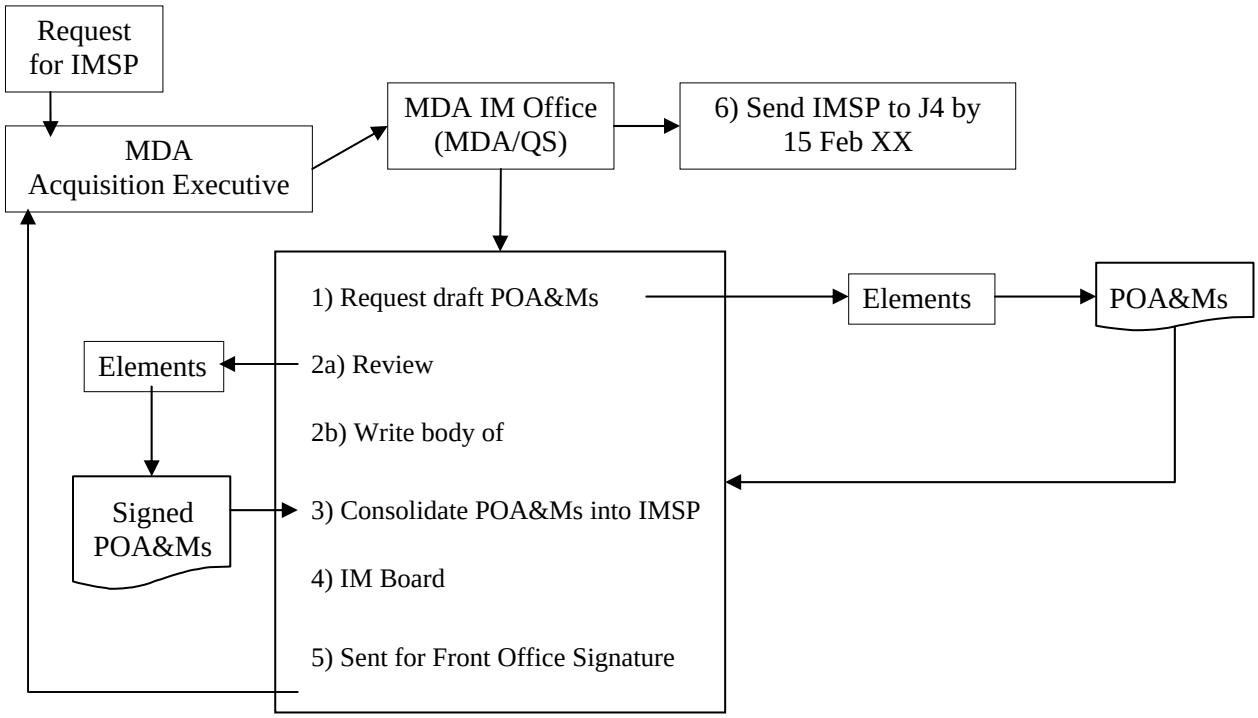

Figure K-1 MDA IMSP Process 1

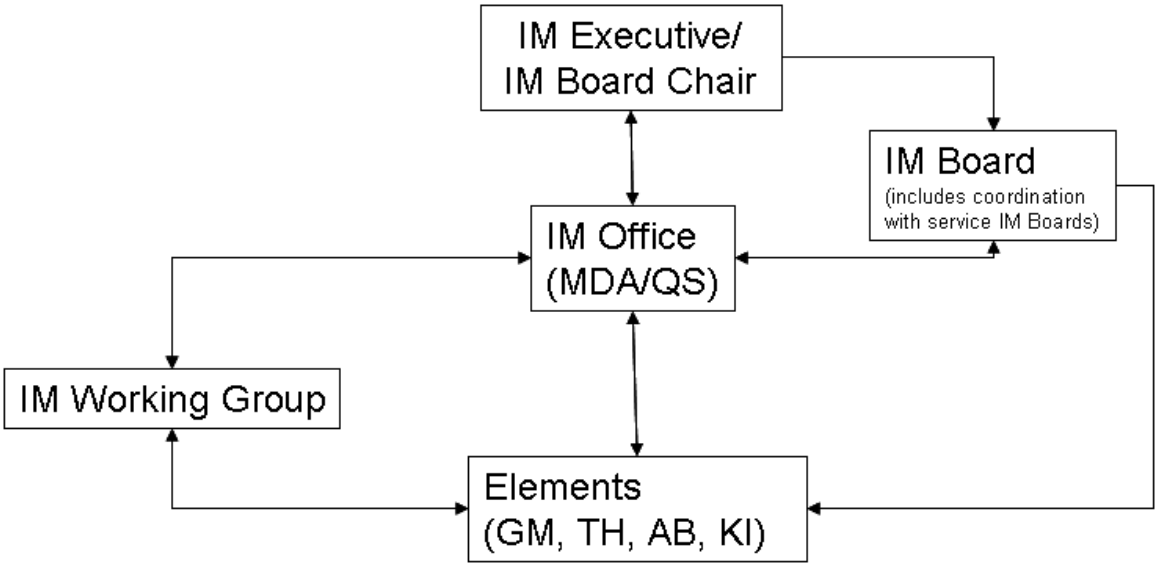

Figure K-2 MDA IM Board Process 1

APPENDIX L: DEFINING IM RELATED BOARDS/ACTIVITIES

IM Related Boards

In the IM community there are a various IM-related boards, councils, and the like, whose responsibilities vary from strategic plan reviews to certifying munition items as being IM compliant.

Following is a list of entities that Service team members charged to support the IM program will encounter during the life cycle of their munitions programs.

ARMY: Army Insensitive Munitions Board (AIMB)

The AIMB carries out various responsibilities that are critical to the effective execution of the US Army IM Program. Also, the AIMB serves as an independent advisory board to the AEA-IM on all IM matters. The Board's primary responsibilities are:

- **Provide IM Technical Advice:** The AIMB works with information provided by the acquisition manager, and suggests sound IM technical approaches to mitigate the severity of munition reactions to unplanned stimuli.
- **Review IM Strategic Plans:** The AIMB provides technical guidance to the PEOs in the formulation of their Insensitive Munitions Strategic Plans (IMSPs) in order to coordinate, and maximize the IM benefit for the Army munitions portfolio. Also, the AIMB reviews IMSPs before submission to the Joint Staff to ensure that the documents are complete, and address IM goals.
- **Review Key Documents:** The AIMB reviews key acquisition program documents including: Capability Development Documents (CDD), Capability Production Documents (CPD), IM POA&M, Threat Hazard Assessments (THA), munition test plans and munition test reports.
- **Integrate IM and System Safety Testing:** The AIMB encourages interaction with Army Hazard Classifiers and the Department of Defense Explosives Safety Board (DDESB) in an effort to combine testing wherever feasible.
- **Provide IM Assessments:** The AIMB assesses the compliance of munitions with IM requirements. The AIMB reviews test results and determines the official Army test scores.
- **Provide Guidance for Out-of-Cycle IM Waivers:** When required, the AIMB reviews requests for out-of-cycle IM waivers, and suggests changes to acquisition managers as appropriate.

ARMY: Army Fuze Safety Review Board (AFSRB)

The AFSRB is a board of technical and safety experts that certify fuze design for Army munitions based on STANAG 4157, STANAG 4187 and STANAG 4497 and associated AOPs. Also, Fuze Board approvals are included in milestone decision review packages.

Department of Defense Explosives Safety Board (DDESB)

The DDESB Chairman is responsible for lifecycle explosive safety management oversight of military munitions, including chemical agents, associated with DoD operations, activities, and

installations worldwide. Other explosives or munitions that may encumber the DoD also fall within his or her purview. The Chairman serves as DoD principle executive representative and advisor on explosive safety management matters, providing advice and technical assistance on explosive and chemical agents issues throughout DoD functional area and activities. The DDESB Chairman is also the authority for DoD explosive hazard classification, as assigned in 49 CFR 173.56(b) (2).

As testing for IM compliance assessment and HC assignment purposes become common, collaboration between service IM and HC representatives and the DDESB Staff, specifically for test planning and scoring purposes, become expected.

Department of Defense Insensitive Munitions Integrated Product Team (DoD-IPT)

The Office of the Under Secretary of Defense (Acquisition, Technology & Logistics) established the US DoD IM IPT to address within DoD IM policy, requirements, programs, and issues nationally and internationally. The DoD IPT Chairperson is the Deputy Director, Strategic and Tactical Systems, Munitions.

Joint Service IM Technical Panel (JSIMTP)

The JSIMTP is an advisory panel which:

- Provides technical advice/recommendations concerning IM technology to program Milestone Decision Authorities, Program Managers, OSD, Joint Staff, and others.
- Reviews all munition acquisition program efforts in identifying IM science and technology opportunities.
- Maintains a real-time, top-level management database on munitions and their IM technology status.
- Advises the Office of the Secretary of Defense (OSD) on international IM matters.
- Provides advice/recommendations on integrated IM and Hazard Classification testing.

NAVY: Navy Insensitive Munitions Office (IMO)

The Navy IMO, NOSSA N83, is designated as the lead in the coordination of all IM-related matters. This includes approving? all documents requiring JROC action. Coordination includes activities internal to DoD, such as the IMC, JSIMTP, Joint Staff, DoD Explosives Safety Board (DDESB), and OUSD (AT&L)/PSA/LW&M; as well as organizations external to DoD, such as the NATO Munitions Safety Information Analysis Center (MSIAC), MSIAC Member Nations, and Action Committee AC/326, as applicable.

The IMO is the designated lead activity for all Navy technical and programmatic matters pertaining to IM. Is the Navy's review and approval agent for Navy munitions program Threat THA, and its IM test planning activities that are forwarded for approval as part of the Joint IM Test Standards and Compliance Assessment. IMO's other responsibilities include:

- Assisting the IMC Executive Secretary in all matters pertaining to the Council.

- Performing duties as IMCG Executive Secretary by providing technical, programmatic, and administrative support.
- Establishing a proactive oversight process in support of the IMCG and IMC, and conducting periodic reviews to evaluate IM compliance.
- Managing and technically directing the Insensitive Munitions Advanced Development (IMAD) Program.
- Serving as the Navy lead in the DOD IM IPT, including required participation in the Joint Services IM Technical Panel (JSIMTP), Joint IM Technology Program (JIMTP), and the NATO IM community.
- Assisting Navy PEOs with IMSP preparation, and acting as the focal point for coordination and IMSP staffing to the Navy Acquisition Executive, Joint Staff, and OSD through the IMC.
- Developing and promulgating DoN IM Strategic Planning Guidance. Key elements include: the establishment and maintenance of processes and procedures for DoN IM test planning/scoring in accordance with the Joint IM Test Standards and Compliance Assessment process, IMSPs, Waivers, THAs, and POA&Ms per DoD policy.
- Maintaining records of all IMSPs, Waivers, and POA&Ms, to include those submitted by all Services, Agencies, and COCOMs that require review by the IMC.
- Providing oversight for the establishment and operation of all Navy official IM Reaction scoring boards.
- Serving as the Navy's final approval authority for Navy THAs and Navy IM test plans prior to being staffed for Joint review and approval.
- Managing the energetics and explosives Qualification and Final (Type) Qualification program.

NAVY: Weapon Systems Explosives Safety Review Board (WSESRB)

The purpose of the WSESRB is to provide an independent and technical review of the adequacy of a Program's system safety program.

NAVY: Navy Insensitive Munitions Boards

Currently, there are three site-based Navy IM review boards: the Insensitive Munitions Review Boards (IMRBs) at Naval Surface Warfare Center (NSWC), Dahlgren Division; NSWC Crane Division; and the Ordnance Hazards Evaluation Board (OHEB) at Naval Air Warfare Center Weapons Division (NAWCWD), China Lake.

The Navy Insensitive Munitions Review Boards review test plans/reports and officially score test results for the Navy.

A plan to consolidate these boards (IMRBs and OHEB) into a single entity (to be identified as the Munitions Reaction Evaluation Board [MREB]) is underway.

USAF: IM Technical Working Group (IMTWG)

The USAF IMTWG will serve as a source of expertise to advise the NNMSB on all matters pertaining to IM program management and technical requirements. In order to achieve timely responses to weapon acquisition program managers, item managers, the Air Force IM Panel and IM Board, Air Staff, and the other military services IM authorities, the IMTWG will act on behalf of and with the full authority of the NNMSB. Its functions include reviews of the THAs, IM test plans, assessment of IM test results, IM certification requests, and IM waiver requests. The IMTWG will also develop NNMSB recommendations on Air Force, DoD and NATO IM standards issues and policy development. The IMTWG's responsibilities include:

- Providing advice and assistance to program managers
- Providing technical expertise and standards maintenance
- Performing weapon-specific review functions
- Reviewing/Approving insensitive munitions plans.

USAF: Non-Nuclear Review Safety Board

Air Force Manual 91-205, governs the AF Non-Nuclear Munitions Safety Board's activities. It details everything from membership to the types of munitions that are or are not required to meet the board prior to introduction into the Air Force inventory. The board consists of one voting member from the Air Force Operational Test and Evaluation Center, Air National Guard Bureau, and all major commands. Currently, the board is chaired by the Weapons, Space, and Nuclear Safety Division Chief from the Air Force Safety Center (AFSC).

The board's mission includes providing design and qualification safety guidance to the program management authorities of non-nuclear munitions. The board is the reviewing authority for system safety of all non-nuclear munitions and associated support equipment.

USSOCOM: IM Board:

Place holder

Missile Defense Agency (MDA): IM Working Group:

Purpose: To assist the MDA IM Board in coordinating IM technical and programmatic matters within the Agency.

Membership: The MDA IM Working Group membership consists of representatives from the following organizations:

- Office of the Deputy Director for Safety (QSS)
- Office of the Program Director, Aegis BMD (AB)
- Office of the Program Director, Ground-Based Midcourse Defense (GM)
- Office of the Director, Advanced Systems (AS)
- Office of the Program Director, Targets and Countermeasures (TC)
- Office of the Program Director, Kinetic Energy Interceptors (KI)
- Office of the Program Director, THAAD (TH)

- Other members as required.

The MDA IM Working Group's responsibilities include:

- Reviewing the MDA's programs for compliance with Title 10, DOD Directives and Joint Chief's policy to preclude any acquisition program disruptions caused by IM shortfalls
- Providing coordinated IM technical and programmatic information to the IM Board
- Assisting the IM Office in preparing an annual report, and IM Strategic Plan summarizing activities and status of IM efforts
- Reviewing IM waiver requests, Plans of Action and Milestones (POA&Ms)and IM Strategic Plan (IMSP) inputs.

Department of Defense
DIRECTIVE

NUMBER 5000.1
May 12, 2003

USD(AT&L)

SUBJECT: The Defense Acquisition System

References:

(a) DoD Directive 5000.1, "The Defense Acquisition System," October 23, 2000 (hereby canceled)
(b) DoD Instruction 5000.2, "Operation of the Defense Acquisition System," May 12, 2003
(c) DoD 5025.1-M, "DoD Directives System Procedures," current edition
(d) Title 10, United States Code, "Armed Forces"
(e) Section 2350a of title 10, United States Code, "Cooperative Research and Development Projects: Allied Countries"
(f) Section 2751 of title 22, United States Code, "Need for international defense cooperation and military export controls; Presidential waiver; report to Congress; arms sales policy"
(g) Section 2531 of title 10, United States Code, "Defense memoranda of understanding and related agreements"
(h) Federal Acquisition Regulation (FAR), current edition
(i) Section 1004, Public Law 107-314, "Bob Stump National Defense Authorization Act for Fiscal Year 2003," "Development and Implementation of Financial Management Enterprise Architecture"
(j) DoD Directive 8500.1, "Information Assurance (IA)," October 24, 2002
(k) DoD Directive 4630.5, "Interoperability and Supportability of Information Technology (IT) and National Security Systems (NSS)," January 11, 2002
(l) DoD Directive 2060.1, "Implementation of, and Compliance with, Arms Control Agreements," January 9, 2001

1. PURPOSE

This Directive:

1.1. Reissues reference (a) and authorizes publication of reference (b).

1.2. Along with reference (b), provides management principles and mandatory policies and procedures for managing all acquisition programs.

2. APPLICABILITY AND SCOPE

2.1. This Directive applies to the Office of the Secretary of Defense, the Military Departments, the Chairman of the Joint Chiefs of Staff, the Combatant Commands, the Office of the Inspector General of the Department of Defense, the Defense Agencies, the DoD Field Activities, and all organizational entities within the Department of Defense (hereafter collectively referred to as "the DoD Components").

2.2. The policies in this Directive apply to all acquisition programs.

3. DEFINITIONS

3.1. The Defense Acquisition System is the management process by which the Department of Defense provides effective, affordable, and timely systems to the users.

3.2. An Acquisition Program is a directed, funded effort that provides a new, improved, or continuing materiel, weapon or information system or service capability in response to an approved need.

3.3. The Defense Acquisition Executive (DAE) is the USD(AT&L) who has responsibility for supervising the Defense Acquisition System. The DAE takes precedence on all acquisition matters after the Secretary and the Deputy Secretary.

3.4. The Milestone Decision Authority (MDA) is the designated individual with overall responsibility for a program. The MDA shall have the authority to approve entry of an acquisition program into the next phase of the acquisition process and shall be accountable for cost, schedule, and performance reporting to higher authority, including Congressional reporting.

3.5. The Program Manager (PM) is the designated individual with responsibility for and authority to accomplish program objectives for development, production, and sustainment to meet the user's operational needs. The PM shall be accountable for credible cost, schedule, and performance reporting to the MDA.

4. POLICY

4.1. The Defense Acquisition System exists to manage the nation's investments in technologies, programs, and product support necessary to achieve the National Security Strategy and support the United States Armed Forces. The investment strategy of the Department of Defense shall be postured to support not only today's force, but also the next force, and future forces beyond that.

4.2. The primary objective of Defense acquisition is to acquire quality products that satisfy user needs with measurable improvements to mission capability and operational support, in a timely manner, and at a fair and reasonable price.

4.3. The following policies shall govern the Defense Acquisition System:

4.3.1. Flexibility. There is no *one* best way to structure an acquisition program to accomplish the objective of the Defense Acquisition System. MDAs and PMs shall tailor program strategies and oversight, including documentation of program information, acquisition phases, the timing and scope of decision reviews, and decision levels, to fit the particular conditions of that program, consistent with applicable laws and regulations and the time-sensitivity of the capability need.

4.3.2. Responsiveness. Advanced technology shall be integrated into producible systems and deployed in the shortest time practicable. Approved, time-phased capability needs matched with available technology and resources enable evolutionary acquisition strategies. Evolutionary acquisition strategies are the preferred approach to satisfying operational needs. Spiral development is the preferred process for executing such strategies.

4.3.3. Innovation. Throughout the Department of Defense, acquisition professionals shall continuously develop and implement initiatives to streamline and improve the Defense

Acquisition System. MDAs and PMs shall examine and, as appropriate, adopt innovative practices (including best commercial practices and electronic business solutions) that reduce cycle time and cost, and encourage teamwork.

4.3.4. Discipline. PMs shall manage programs consistent with statute and the regulatory requirements specified in this Directive and in reference (b). Every PM shall establish program goals for the minimum number of cost, schedule, and performance parameters that describe the program over its life cycle. Approved program baseline parameters shall serve as control objectives. PMs shall identify deviations from approved acquisition program baseline parameters and exit criteria.

4.3.5. Streamlined and Effective Management. Responsibility for the acquisition of systems shall be decentralized to the maximum extent practicable. The MDA shall provide a single individual with sufficient authority to accomplish MDA-approved program objectives for development, production, and sustainment. The MDA shall ensure accountability and maximize credibility in cost, schedule, and performance reporting.

4.4. Additional policies that will be applied to the acquisition system are at enclosure 1.

5. RESPONSIBILITIES

5.1. The USD(AT&L), the Assistant Secretary of Defense (Command, Control, Communications, and Intelligence), and the Director of Operational Test and Evaluation are key officials of the Defense Acquisition System. Consistent with their respective authorities, they may jointly issue DoD Instructions, DoD Publications, and one-time directive-type memoranda, consistent with DoD 5025.1-M (reference (c)), that implement the policies contained in this Directive. Financial Management Enterprise Architecture (FMEA) Requirements shall be addressed for all financial management and mixed (financial and non-financial) information systems and shall be certified as being compliant with the FMEA by the Under Secretary of Defense (Comptroller) (USD(C)).

5.2. The Chairman of the Joint Chiefs of Staff (CJCS) shall provide advice and assessment on military capability needs in accordance with sections 153, 163 and 181 of Title 10 (reference (d)). The CJCS shall present this advice and assessment through validated and approved capabilities documents. The CJCS may engage the components and agencies to provide this advice and assessment. Consistent with this Directive, and in coordination with the USD(AT&L), the CJCS may establish procedures to carry out this responsibility.

6. EFFECTIVE DATE

This Directive is effective imr

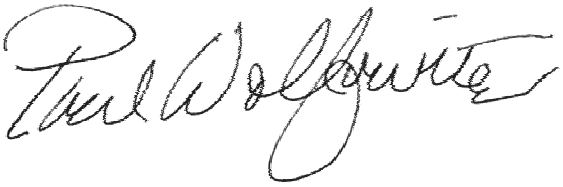

ENCLOSURE 1

ADDITIONAL POLICY

E1.1. Armaments Cooperation. PMs shall pursue international armaments cooperation to the maximum extent feasible, consistent with sound business practice and with the overall political, economic, technological, and national security goals of the United States. International agreements for international armaments cooperation programs shall complete the interagency consultation and Congressional notification requirements contained in 10 U.S.C. 2350a (reference (e)), section 2751 of the Arms Export Control Act (reference (f)), and 10 U.S.C. 2531 (reference (g)).

E1.2. Collaboration. The DoD acquisition, capability needs, and financial communities, and operational users shall maintain continuous and effective communications with each other by using Integrated Product Teams (IPTs). Teaming among warfighters, users, developers, acquirers, technologists, testers, budgeters, and sustainers shall begin during capability needs definition. MDAs and PMs are responsible for making decisions and leading execution of their programs, and are accountable for results.

E1.3. Competition. Competition shall provide major incentives to industry and Government organizations to innovate, reduce cost, and increase quality. All of the DoD Components shall acquire systems, subsystems, equipment, supplies, and services in accordance with the statutory requirements for competition. Acquisition managers shall take all necessary actions to promote a competitive environment, including the consideration of alternative systems to meet stated mission needs; structuring S&T investments and acquisition strategies to ensure the availability of competitive suppliers throughout a program's life, and for future programs; ensuring that prime contractors foster effective competition for major and critical products and technologies; and ensuring that qualified international sources are permitted to compete. If competition is not available, PMs shall consider alternatives that will yield the benefits of competition.

E1.4. Cost and Affordability. All participants in the acquisition system shall recognize the reality of fiscal constraints. They shall view cost as an independent variable, and the DoD Components shall plan programs based on realistic projections of the dollars and manpower likely to be available in future years. To the greatest extent possible, the MDAs shall identify the total costs of ownership, and at a minimum, the major drivers of total ownership costs. The user shall address affordability in establishing capability needs.

E1.5. Cost Realism. Contractors shall be encouraged to submit cost proposals that are realistic for the work to be performed. “Buy-ins” shall be discouraged because they may subvert competition or lead to poor contract performance or cost overruns. Proposals shall be evaluated for cost realism in accordance with the Federal Acquisition Regulation (reference (h)).

E1.6. Cost Sharing. The PM shall structure the acquisition in a way that neither imposes undue risk on contractors, nor requires unusual contractor investment. Contractors shall not be encouraged nor required to invest their profit dollars or independent research and development funds to subsidize defense research and development contracts, except in unusual situations where there is a reasonable expectation of a potential commercial application. Contractors are entitled to earn reasonable rewards on DoD contracts, including competitively awarded contracts.

E1.7. Financial Management. The USD(C) shall develop a FMEA and a transition plan in accordance with section 1004 of the Bob Stump National Defense Authorization Act for Fiscal Year 2003 (Pub. L. 107-314) (reference (i)) and shall approve any obligation of funds in excess of $1M for a defense financial system improvement.

E1.8. Independent Operational Test Agency (OTA). Each Military Department shall establish an independent OTA, reporting directly to the Service Chief, to plan and conduct operational tests, report results, and provide evaluations of effectiveness and suitability.

E1.9. Information Assurance. Acquisition managers shall address information assurance requirements for all weapon systems; Command, Control, Communications, Computers, Intelligence, Surveillance, and Reconnaissance systems; and information technology programs that depend on external information sources or provide information to other DoD systems. DoD policy for information assurance of information technology, including NSS, appears in DoD Directive 8500.1, reference (j).

E1.10. Information Superiority. Acquisition managers shall provide U.S. Forces with systems and families of systems that are secure, reliable, interoperable, compatible with the electromagnetic spectrum environment, and able to communicate across a universal information technology infrastructure, including NSS, consisting of data, information, processes, organizational interactions, skills, analytical expertise, other systems, networks, and information exchange capabilities.

E1.11. Integrated Test and Evaluation. Test and evaluation shall be integrated throughout the defense acquisition process. Test and evaluation shall be structured to provide essential information to decision-makers, assess attainment of technical performance parameters, and determine whether systems are operationally effective, suitable, survivable, and safe for intended use. The conduct of test and evaluation, integrated with modeling and simulation, shall facilitate learning, assess technology maturity and interoperability, facilitate integration into fielded forces, and confirm performance against documented capability needs and adversary capabilities as described in the system threat assessment.

E1.12. Intelligence Support. Intelligence and understanding threat capabilities are integral to system development and acquisition decisions. PMs shall keep threat capabilities current and validated in program documents throughout the acquisition process.

E1.13. Interoperability. Systems, units, and forces shall be able to provide and accept data, information, materiel, and services to and from other systems, units, and forces and shall effectively interoperate with other U.S. Forces and coalition partners. Joint concepts and integrated architectures shall be used to characterize these interrelationships. DoD policy for the information technology, including NSS, aspects of interoperability and supportability appears in DoD Directive 4630.5, reference (k).

E1.14. Knowledge-Based Acquisition. PMs shall provide knowledge about key aspects of a system at key points in the acquisition process. PMs shall reduce technology risk, demonstrate technologies in a relevant environment, and identify technology alternatives, prior to program initiation. They shall reduce integration risk and demonstrate product design prior to the design readiness review. They shall reduce manufacturing risk and demonstrate producibility prior to full-rate production.

E1.15. Legal Compliance. The acquisition and procurement of DoD weapons and weapon systems shall be consistent with all applicable domestic law and treaties and international

agreements (for arms control agreements, see DoD Directive 2060.1, reference (l)), customary international law, and the law of armed conflict (also known as the laws and customs of war). An attorney authorized to conduct such legal reviews in the Department shall conduct the legal review of the intended acquisition of weapons or weapons systems.

E1.16. Performance-Based Acquisition. To maximize competition, innovation, and interoperability, and to enable greater flexibility in capitalizing on commercial technologies to reduce costs, acquisition managers shall consider and use performance-based strategies for acquiring and sustaining products and services whenever feasible. For products, this includes all new procurements and major modifications and upgrades, as well as reprocurements of systems, subsystems, and spares that are procured beyond the initial production contract award. When using performance-based strategies, contract requirements shall be stated in performance terms, limiting the use of military specifications and standards to Government-unique requirements only. Acquisition managers shall base configuration management decisions on factors that best support implementing performance-based strategies throughout the product life cycle.

E1.17. Performance-Based Logistics. PMs shall develop and implement performance-based logistics strategies that optimize total system availability while minimizing cost and logistics footprint. Trade-off decisions involving cost, useful service, and effectiveness shall consider corrosion prevention and mitigation. Sustainment strategies shall include the best use of public and private sector capabilities through government/industry partnering initiatives, in accordance with statutory requirements.

E1.18. Products, Services, and Technologies. The DoD Component(s) shall consider multiple concepts and analyze possible alternative ways to satisfy the user need. System concepts shall be founded in an operational context, consistent with the National Military Security Strategy, Defense Planning Guidance, Joint Concepts, and joint integrated architectures. The DoD Components shall seek the most cost-effective solution over the system's life cycle. They shall conduct market research and analysis to determine the availability, suitability, operational supportability, interoperability, safety, and ease of integration of the considered and selected procurement solutions. The DoD Components shall work with users to define capability needs that facilitate the following, listed in descending order of preference:

E1.18.1. The procurement or modification of commercially available products, services, and technologies, from domestic or international sources, or the development of dual-use technologies;

E1.18.2. The additional production or modification of previously-developed U.S. and/or Allied military systems or equipment;

E1.18.3. A cooperative development program with one or more Allied nations;

E1.18.4. A new, joint, DoD Component or Government Agency development program; or

E1.18.5. A new DoD Component-unique development program.

E1.19. Professional Workforce. The Department of Defense shall maintain a fully proficient acquisition, technology, and logistics workforce that is flexible and highly skilled across a range of management, technical, and business disciplines. To ensure this, the USD(AT&L) shall establish education, training, and experience standards for each acquisition position based on the level of complexity of duties carried out in that position.

E1.20. Program Information. Complete and current program information is essential to the acquisition process. Consistent with the tables of required regulatory and statutory information appearing in reference (b), decision authorities shall require PMs and other participants in the defense acquisition process to present only the minimum information necessary to establish the program baseline, describe program plans, understand program status, and make informed decisions. The MDA shall "tailor-in" program information. IPTs shall facilitate the management and exchange of program information.

E1.21. Program Stability. The DoD Components shall develop realistic program schedules, long-range investment plans, and affordability assessments, and shall strive to ensure stable program funding. The MDA shall determine the appropriate point at which to fully fund an acquisition program, generally when a system concept and design have been selected, a PM has been assigned, capability needs have been approved, and system-level development is ready to begin. Full funding shall be based on the cost of the most likely system alternative.

E1.22. Research and Technology Protection. Acquisition managers shall identify classified and controlled unclassified research and technology information requiring additional counter intelligence and security support early in the research and development, capability needs generation, and acquisition processes.

E1.23. Safety. Safety shall be addressed throughout the acquisition process. Safety considerations include human (includes human/system interfaces), toxic/hazardous materials and substances, production/manufacturing, testing, facilities, logistical support, weapons, and munitions/explosives. All systems containing energetics shall comply with insensitive munitions criteria.

E1.24. Small Business Participation. Acquisition strategies shall be structured to facilitate small business participation throughout a program's life cycle through direct participation or, where such participation is not available, through fostering teaming with small business concerns.

E1.25. Software Intensive Systems. Acquisition of software intensive systems shall use process improvement and performance measures. Selection of sources shall include consideration of product maturity and past performance.

E1.26. Streamlined Organizations. The Department of Defense shall use a streamlined management structure in the acquisition system, characterized by short, clearly defined lines of responsibility, authority, and accountability. In no case, shall there be more than two levels of review between a PM and the MDA.

E1.27. Systems Engineering. Acquisition programs shall be managed through the application of a systems engineering approach that optimizes total system performance and minimizes total ownership costs. A modular, open-systems approach shall be employed, where feasible.

E1.28. Technology Development and Transition. The Science and Technology (S&T) program shall:

E1.28.1. Address user needs;

E1.28.2. Maintain a broad-based program spanning all Defense-relevant sciences and technologies to anticipate future needs and those not being pursued by civil or commercial communities;

E1.28.3. Preserve long-range research; and

E1.28.4. Enable rapid, successful transition from the S&T base to useful military products.

E1.29. Total Systems Approach. The PM shall be the single point of accountability for accomplishing program objectives for total life-cycle systems management, including sustainment. The PM shall apply human systems integration to optimize total system performance (hardware, software, and human), operational effectiveness, and suitability, survivability, safety, and affordability. PMs shall consider supportability, life cycle costs, performance, and schedule comparable in making program decisions. Planning for Operation and Support and the estimation of total ownership costs shall begin as early as possible. Supportability, a key component of performance, shall be considered throughout the system life cycle.

THE UNDER SECRETARY OF DEFENSE

3010 DEFENSE PENTAGON
WASHINGTON, DC 20301-3010

ACQUISITION,
TECHNOLOGY
AND LOGISTICS

21 JUL 2004

MEMORANDUM FOR SECRETARIES OF THE MILITARY DEPARTMENTS
CHAIRMAN OF THE JOINT CHIEFS OF STAFF
COMMANDER, U.S. SPECIAL OPERATIONS COMMAND
DIRECTOR, MISSILE DEFENSE AGENCY

SUBJECT: Insensitive Munitions (IM) Strategic Planning

This memorandum establishes Department of Defense policy for the annual submission of Insensitive Munitions Strategic Plans to the Joint Requirements Oversight Council (JROC) and the Office of the Under Secretary of Defense (Acquisition, Technology and Logistics) (OUSD (AT&L)). The first submission is due February 15, 2005.

Section 2389 of title 10, United States Code, requires the Secretary of Defense to "ensure, to the extent practicable, that insensitive munitions under development or procurement are safe throughout development and fielding when subjected to unplanned stimuli". The JROC monitors and keeps me informed with respect to compliance with IM requirements policy through the established waiver process; however, this process is sub-optimized, limiting the JROC's view to individual munition programs without insight or recognition of other/related IM efforts or investment priorities. This new policy will serve to increase our visibility into the total Program Executive Office (PEO) munitions portfolio and enable decisions to be made in a broader context. The transition towards a totally IM compliant munitions inventory becomes more clearly defined by this perspective. To this end the Secretaries of the Military Departments, Director, Missile Defense Agency, and Commander, Special Operations Command, will ensure that PEOs with weapon responsibilities develop and submit annual IM Strategic Plans to the JROC and OUSD (AT&L). The Plans will be co-signed by the appropriate Acquisition Executive and Comptroller (or Resource Sponsor), thus conveying a commitment to execution and funding. Pertinent details regarding the strategic plan are attached.

Starting in February 2005, annual IM Strategic Plans will be the vehicle to submit and consolidate IM waiver requests. However, addressees will retain the flexibility to submit individual waiver requests, in the unusual case where such a request is needed, to meet specific urgent program milestones in a timely manner. All out-of-cycle requests shall be reported in the next annual plan submission. All other aspects of the current IM waiver request review and approval process remain unchanged.

The OSD point of contact for additional information on IM Strategic Planning policy and development is Mr. Tony Melita (703-695-1382, Anthony.Melita@ osd.mil). The JROC point of contact is: Division Chief, J8 Capabilities and Acquisition Division (703-614-3682).

Michael W. Wynne
Acting

Attachments:
As stated

cc:
Director, Defense Research and Engineering

INSENSITIVE MUNITIONS STRATEGIC PLANS

Key Elements

Each Strategic Plan should include as a minimum:

- An executive summary that discusses the plan's key points and the methodology used in the development and decision process.

- A complete list of all munitions (e.g. legacy, developmental, in production, awaiting production, ATD, FCT, current inventory) for which that PEO has acquisition and lifecycle responsibility

- For each munition:
    - Munition characteristics including nomenclature, Mark and/or Mod, Net Explosive Weight, and energetic fills of each relevant component.
    - RDT&E and procurement profile (funding and quantity across the FYDP)
    - Baseline IM performance (known or predicted) for the IM threats per MIL-STD-2105C and the hazard classification (HC) assigned (interim or final)
    - Ongoing and planned technology integration efforts aimed at IM improvement and HC reduction and the funding supporting such efforts, and
    - New technologies required for achieving full IM compliance and the schedule for technology maturity

- Munition system IM investment priorities and prioritization criteria

- Funded Service-specific and Joint investments to demonstrate and integrate new IM technologies

- All unfunded IM requirements

CHAIRMAN OF THE JOINT CHIEFS OF STAFF INSTRUCTION

J-8 CJCSI 3170.01F
DISTRIBUTION: A, B, C, J, S 1 May 2007

JOINT CAPABILITIES INTEGRATION AND DEVELOPMENT SYSTEM

References: See Enclosure D

1. Purpose. The purpose of this instruction is to establish the policies and procedures of the Joint Capabilities Integration and Development System (JCIDS). The procedures established in the JCIDS support the Chairman of the Joint Chiefs of Staff (CJCS) and the Joint Requirements Oversight Council (JROC) in identifying, assessing, and prioritizing joint military capability needs as specified in title 10, United States Code, sections 153, 163, 167, and 181 (reference a). Validated and approved JCIDS documents provide a record of the JROC's advice and assessment in support of these statutory mandates. Additionally, the JCIDS is a key element in CJCS efforts to realize the initiatives directed in reference b. Specific procedures for the operation of the JCIDS and for the development and staffing of JCIDS documents can be found in reference c.

2. Cancellation. CJCSI 3170.01E, 11 May 2005, "Joint Capabilities Integration and Development System" is canceled.

3. Applicability. In accordance with references d, e, and f, this instruction applies to the Joint Staff, Services, combatant commands, Defense agencies, Defense field activities, and all other organizational entities within DOD. This instruction also applies to other agencies preparing and submitting JCIDS documents in accordance with references d, e, and f. This instruction applies to all unclassified, collateral, compartmented, and special access programs.

4. Executive Summary.

a. There are three key processes in the Department of Defense that must work in concert to deliver the capabilities required by the warfighters: the requirements process; the acquisition process; and the Planning, Programming,

Budgeting, and Execution (PPBE) process. To produce weapon systems that provide the capabilities our warfighters need, these three processes must be aligned to ensure consistent decisions are made. This instruction focuses on the requirements process as implemented in JCIDS.

b. The JCIDS process was created to support the statutory requirements of the JROC to validate and prioritize joint warfighting requirements. JCIDS is also a key supporting process for DOD acquisition and PPBE processes. The primary objective of the JCIDS process is to ensure the joint warfighter receives the capabilities required to successfully execute the missions assigned to them. This is done through an open process that provides the JROC the information they need to make decisions on required capabilities. The requirements process supports the acquisition process by providing validated capabilities and associated performance criteria to be used as a basis for acquiring the right weapon systems. Additionally, it provides the PPBE process with prioritization and affordability advice.

c. The JCIDS process is initiated through the execution of a capabilities-based assessment (CBA). The CBA is based on an existing Joint Operating Concept (JOC), Joint Integrating Concept (JIC), or concept of operations (CONOPs). The CBA identifies: the capabilities (and operational performance criteria) required to successfully execute missions; the shortfalls in existing weapon systems to deliver those capabilities and the associated operational risks; and the possible solution space for the capability shortfalls. The results of the CBA are documented in a Joint Capabilities Document (JCD) or an Initial Capabilities Document (ICD). The JROC is performing two functions when it approves a JCD or an ICD. The JROC is validating that there is a need to address the capability gaps and that there are potentially affordable and technically feasible solutions to the gaps. This does not imply that the JROC is advocating a specific technical solution when the JCD or ICD is approved. The JROC may also identify capability gaps where the operational risk is at an acceptable level and therefore no further action will be taken. Finally, the JROC may approve a non-materiel approach (changes to doctrine, organization, etc.) to address the capability gap as an alternative or adjunct to advocating for a new materiel solution. The approved JCD or ICD becomes the basis for further analysis by the Services and/or agencies to identify the most appropriate weapon system to provide the desired capability.

d. The Service or agency responsible for acquiring the weapon system performs analysis based on the JCD or ICD to identify the best technical approach. A Capabilities Development Document (CDD) is then developed to describe that approach. The primary objective of the CDD is to specify the system technical performance criteria of the weapon system that will deliver the capability that meets operational performance criteria specified in the JCD or ICD. The JROC is performing several functions in approving the CDD. They are validating the key performance parameters (KPP) and their associated

threshold and objective values. They are assessing the risks in meeting those KPPs in terms of cost, schedule and technology maturity. Finally, they are assessing the affordability of the system as compared to the operational capability being delivered. The JROC approval of the CDD becomes one of the key factors in the final decision by the milestone decision authority (MDA) to initiate a development program.

e. Upon completion of the system development process, the acquiring Service or agency delivers a Capability Production Document (CPD). The primary objective of the CPD is to describe the actual performance of the weapon system that will go into production. The primary difference between a CPD and a CDD is that the CPD is informed by the lessons learned during the development process. The JROC objective in approving the CPD is to ensure that the weapon system being delivered meets the needs originally defined in the JCD or ICD at an affordable cost. If the weapon system does not meet all of the threshold levels for the KPPs, the JROC will assess whether or not the weapon system remains operationally acceptable. The approved CPD becomes the basis for the MDA decision to approve production of the system.

f. The JCIDS process was designed to be a robust process to support the complex decisions required of the JROC and the acquisition community in identifying and procuring future capabilities. Recognizing that not all capabilities/weapon systems require the same level of consideration, the JCIDS process is tailorable. The JROC has identified several alternative paths to allow accelerated identification of capability gaps and potential solutions, and to allow them to enter into the JCIDS process at the appropriate stage to deliver those capabilities more rapidly.

g. The JROC continues to refine the JCIDS process and the information they require to ensure they are making effective, appropriate decisions in a timely manner. This update to the policies and processes continues that evolution of JCIDS to ensure our ability to continue to meet the needs of the joint warfighter.

5. Policy. See Enclosure B.

6. Definitions. See Glossary.

7. Responsibilities. See Enclosure C.

8. Summary of Changes. This revision:

a. Reflects an update to the instruction issued 11 May 2005 to reflect lessons learned and changes as a result of implementation of the JCIDS process.

b. Implements the staffing streamlining guidance in reference j to allow bypassing the flag coordination process if a document has no unresolved critical comments after Phase I staffing.

c. Implements the joint information joint potential designator (JPD) per reference j.

d. Implements the process for endorsing safe weapons in a joint warfighting environment per direction in reference k.

e. Incorporates congressionally mandated KPPs for force protection and survivability per reference l.

f. Implements changes as directed in reference m, to include: incorporating use of joint capability areas (JCA); defining a more rapid process for updating KPPs; deleting the post independent analysis as a requirement; adding the requirement for a CBA study plan for JROC-directed CBAs; including consideration of alternate CONOPs in the CBA; requiring a more complete understanding of the threats and mitigation strategy; and permitting the use of CONOPs to initiate a CBA.

g. Implements changes resulting from the KPP study, including: a new mandatory KPP for sustainment; the selected application of KPPs on system training and energy efficiency; a recommended approach to identify applicable KPPs; and ensuring that the timeframe when a capability is required is identified in the JCIDS documentation per reference n.

h. Implements a more structured comment resolution process to ensure critical comments are being resolved in a timely manner per reference o.

i. Removes the requirement for an insensitive munitions certification or waiver per JROC direction.

9. Releasability. This instruction is approved for public release; distribution is unlimited. DOD components (to include the combatant commands), other federal agencies, and the public may obtain copies of this instruction through the Internet from the CJCS Directives Home Page--http://www.dtic.mil/cjcs_directives.

10. Effective Date. This instruction is effective upon receipt.

WALTER L. SHARP
Lieutenant General, USA
Director, Joint Staff

Enclosures:
A -- Joint Capabilities Integration and Development System (JCIDS) Process
B -- Policy
C -- Responsibilities
D -- References
GL – Glossary

DISTRIBUTION

Distribution A, B, C, and J plus the following:

	Copies
Secretary of Defense	2
Under Secretary of Defense for Acquisition, Technology and Logistics	2
Under Secretary of Defense (Comptroller)	2
Under Secretary of Defense for Personnel and Readiness	2
Under Secretary of Defense for Policy	2
Under Secretary of Defense for Intelligence	2
Assistant Secretary of Defense (Health Affairs)	2
Assistant Secretary of Defense (Networks & Information Integration)/DOD CIO	2
Director, Program Analysis and Evaluation	2
Director of Operational Test and Evaluation	2

(INTENTIONALLY BLANK)

LIST OF EFFECTIVE PAGES

The following is a list of effective pages for. Use this list to verify the currency and completeness of the document. An "O" indicates a page in the original document.

PAGE	CHANGE
1 thru 4	O
i thru vi	O
A-1 thru A-10	O
B-1 thru B-4	O
C-1 thru C-12	O
D-1 thru D-2	O
GL-1 thru GL-20	O

(INTENTIONALLY BLANK)

RECORD OF CHANGES

Change No.	Date of Change	Date Entered	Name of Person Entering Change

(INTENTIONALLY BLANK)

ENCLOSURE A

JOINT CAPABILITIES INTEGRATION AND DEVELOPMENT SYSTEM (JCIDS) PROCESS

1. Purpose. The JCIDS is one component of the capability-based planning (CBP) process. The CBP process encompasses the principal DOD decision support processes for transforming the military forces to support the national military strategy and the defense strategy. JCIDS plays a key role in identifying the capabilities required by the warfighters to support the National Defense Strategy and the National Military Strategy, but successful delivery of those capabilities relies on the JCIDS process working in concert with the other joint and DOD decision processes encapsulated in CBP. The procedures established in the JCIDS support the Chairman and JROC in advising the Secretary of Defense in identifying, assessing, and prioritizing joint military capability needs as specified in reference a.

a. JCIDS identifies the joint force capabilities necessary to perform across the full range of military operations and challenges.

b. JCIDS implements an integrated, collaborative process to guide development of new capabilities through changes in joint doctrine, organization, training, materiel, leadership and education, personnel, and facilities (DOTMLPF) and policy.

c. JCIDS recognizes that there are many sources for capability needs including: Joint Urgent Operational Needs (JUONs) (reference i) for immediate needs, combatant commander's integrated priority lists (IPL), lessons learned, transitioning improvised explosive device (IED) initiatives (reference p), etc. Once these sources have been reviewed and approved by the JROC, they will enter the JCIDS and acquisition processes at Milestone B or C.

d. The JROC is continuing to develop a construct to identify and prioritize joint warfighting capabilities. The JROC has approved a list of most pressing military issues (MPMI) that will be used to provide the JROC's priority guidance on solving select combatant command and Department issues. The MPMI is intended to be used as a focusing construct for those issues that come before the JROC.

2. JCIDS Methodology. JCIDS implements a capabilities-based approach that better leverages the expertise of all government agencies to identify improvements to existing capabilities and to develop new warfighting capabilities. This approach requires a collaborative process that utilizes joint concepts and integrated architectures to identify prioritized capability gaps and

integrated joint DOTMLPF and policy approaches (materiel and non-materiel) to resolve those gaps.

a. Implementation. JCIDS implements:

(1) A methodology using joint concepts that will identify and describe shortcomings and redundancies in warfighting capabilities; identify the timeframe in which the shortfall or redundancy exists; describe effective solutions; identify potential approach(es) to resolve those shortcomings; and provide a foundation for further development and enhancements of integrated architectures.

(2) A broad review of capability proposals/documents developed throughout the Department of Defense, focusing on the contributions made to the realization of the Joint Operations Concepts (JOpsC).

(3) Linkage to the acquisition strategy and process by engaging the provider early, as capabilities proposals/documents are developed. Additionally, JCIDS fully complements the evolutionary acquisition process and leverages the use of capability roadmaps and integrated architectures as described in references e and f.

(4) Prioritization of joint warfighting capability gaps and evaluation of operational risk based on the JOpsC to help focus the efforts of materiel and non-materiel developers, including bringing together different sponsors to jointly work toward a solution. These prioritized joint warfighting capabilities will also inform science and technology planning, capability roadmaps, and other acquisition decision processes.

(5) Better definition of the relationship and integration between materiel considerations and non-materiel, or DOTMLPF and policy, resulting from the development, fielding and sustainment of a new capability, whether it is an individual system, a family of systems (FoS), or a system of systems (SoS). Additionally, the JCIDS process directly addresses joint non-materiel changes through the joint DOTMLPF change recommendation (DCR) process.

(6) Incorporation of joint DCRs. The joint DCR defines the implementation of recommendations to change joint DOTMLPF and policy from USJFCOM or other sponsors of joint experimentation (reference q), joint testing, and evaluation (reference r) activities.

(7) Coordination with other US government departmental or agency staffs.

b. Top Down Capabilities Identification Methodology. The JOpsC are developed from top-level strategic guidance, providing a top-down baseline for identifying future capabilities (reference q). New capability requirements,

materiel or non-materiel, must relate directly to capabilities identified through the JOpsC. Therefore, the JOpsC are not intended to provide immediate solutions but proposed solutions that can afford careful examination over a more extended period of time. CONOPs may indicate short-term capability needs. CONOPs allow the joint community to adjust or divest current capabilities by providing the operational context needed to justify or modify current programs. The process flows from national level and strategic guidance through the concepts is shown in Figure A-1. As they are developed, the JOpsC, and if necessary Service concepts, will provide the conceptual basis for CBAs to answer these questions by identifying capabilities, gaps, and redundancies as well as potential non-materiel and materiel approaches to addressing the issues. A CBA may also be based on a combatant command, Service, or Defense agency CONOPs. The CBA process is described in reference c. Due to the wide variance in the scope of capabilities covered by the JCIDS process, the breadth and depth of the CBA must be tailored to suit the issue.

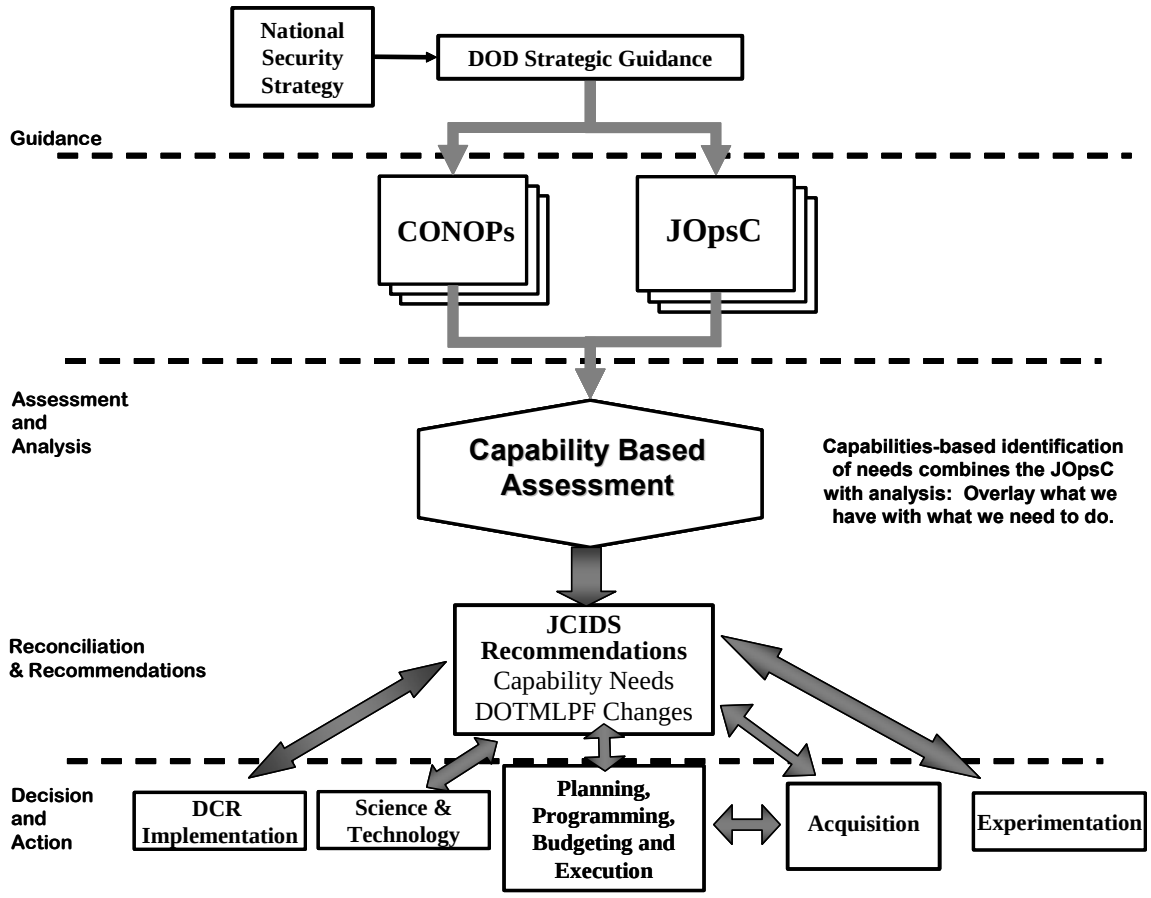

Figure A-1. Top Down Capability Need Identification Process

c. Experimentation and Science and Technology

(1) Experimentation. Experimentation may be part of the CBA process. The results of experimentation can help inform the CBA. Conversely, the

requirements for experimentation may be driven by the unknowns identified in the process of performing the CBA. Joint experimentation explores concepts to identify joint and component DOTMLPF change recommendations and capabilities gaps (reference q). Experimentation provides insight and understanding of the concepts and capabilities that are possible given the maturity of specific technologies and capabilities that need additional research and development emphasis. Experimentation and assessment can help establish measures of effectiveness to indicate achievement of desired operational capabilities.

(2) Science and Technology. The prioritized joint warfighting capabilities identified through the JCIDS process should serve to inform the science and technology community and focus the developmental efforts of the community as specified in the Joint Warfighting Science and Technology Plan (JWSTP). Joint Capability Technology Demonstrations (JCTDs), Advanced Concept Technology Demonstrations (ACTDs), and qualified prototype projects are important mechanisms in this process because they are used to assess the military utility of new capabilities, accelerate maturation of advanced technologies, and provide insight into non-materiel implications. They are on a scale large enough to demonstrate operational utility and end-to-end system integrity. The JROC reviews and validates joint mission needs cited as the foundation of JCTDs/ACTDs. Follow-on JCIDS action is taken as appropriate.

d. Functional Capabilities Boards (FCBs). Throughout the JCIDS analysis process, the FCBs will provide oversight and assessment as appropriate to ensure the analysis takes into account joint capabilities, concerns, and approaches to solutions (reference s). The FCBs are also responsible for assessing capabilities, priorities, and tradeoffs across the range of functional areas using the JCAs as an organizing construct. The FCBs provide recommendations to the JROC. Each FCB will be supported by one or more O-6-led FCB working groups.

e. Sponsor. Throughout the JCIDS process, reference is made to the sponsor. The identity and responsibilities of the sponsor will change throughout the JCIDS process. Additional definition of the sponsor's role is provided in Enclosure C of this publication.

f. Identifying Capabilities. In a capabilities-based approach, it is important to establish a common understanding of how a capability is identified and expressed in the ICD. A capability is the ability to achieve a desired effect under specified standards and conditions through combinations of means and ways to perform a set of tasks. The top-down capabilities identification methodology provides a method to identify gaps in the ability of the combatant command to execute assigned missions and assess associated risk(s). This methodology also establishes the linkage between the characteristics of the

future joint force identified in the Capstone Concept for Joint Operations (CCJO) and individual capabilities.

g. Interagency Capabilities. There will be capabilities that will have applicability across the Department of Defense and certain non-DOD agencies and departments, to include the Department of State, Department of Homeland Security, and others. Conversely, there will be capabilities developed by other government departments and agencies that may fill a DOD capability gap. The lead FCB is responsible to coordinate these linkages to minimize inefficiency and redundancy in capability development.

h. National Intelligence Capabilities. Intelligence capabilities developed by the Intelligence Community provide resources for national users as well as DOD warfighters. As such, capabilities integration and development efforts by the Intelligence Community must follow a parallel path between the defense and national intelligence communities. Resulting capabilities documents will be validated and approved by the JROC and the Director of National Intelligence (DNI) Mission Requirements Board (MRB).

3. Introduction to the JCIDS Process. A simplified depiction of the relationship between the JCIDS process and key acquisition decision points is provided in Figure A-2 below. (This figure does not reflect the modified processes used for space- and NRO-related programs; see references f and t.) The figure illustrates the process flowing through and into defense and information technology acquisition boards in accordance with references e and f. The component MDAs use similar practices. The JCIDS process is closely linked to the acquisition process, described in references d, e, and f.

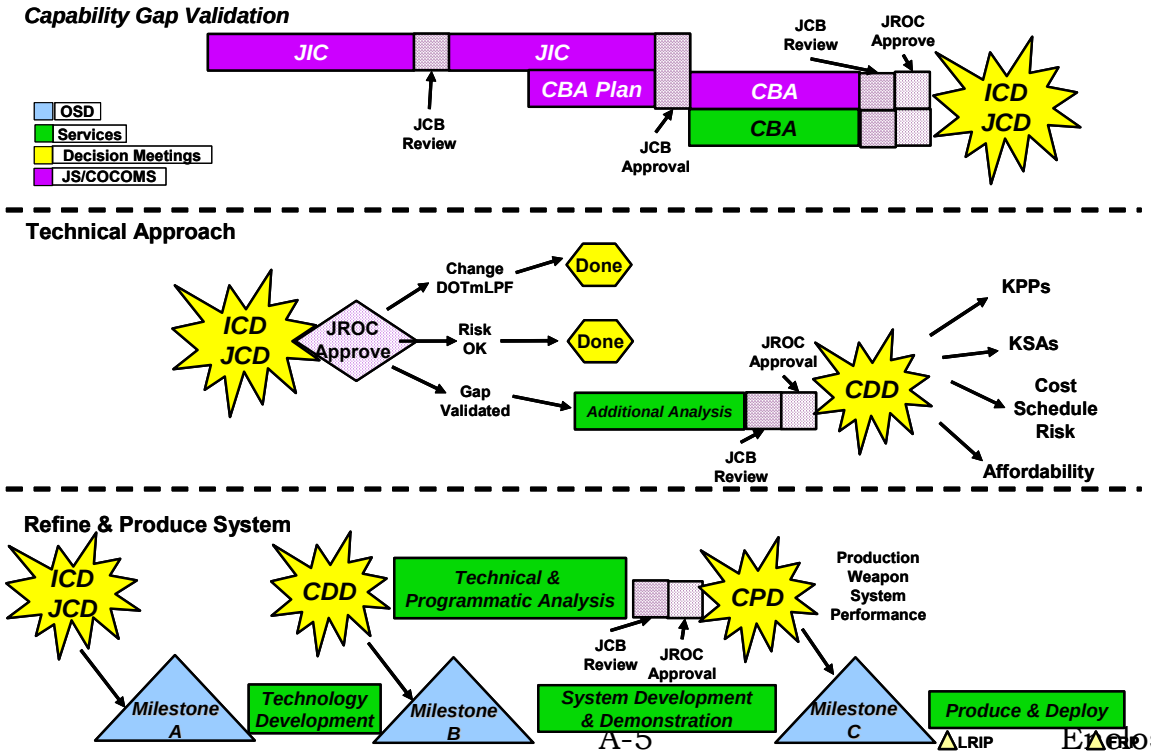

Figure A-2. JCIDS Process and Acquisition Decisions

a. JCIDS documents (JCD, ICD, CDD, CPD, and joint DCR) support the implementation of non-materiel solutions and the development and production of materiel solutions. Key components of the CDD and CPD are the integrated architecture products that ensure the Department of Defense understands the linkages between capabilities and systems and can make appropriate acquisition decisions; and the performance attributes, including KPPs and key system attributes (KSAs), that define the most critical elements of performance for the systems under development.

4. JCIDS Documentation. The documentation developed during the JCIDS process provides the formal communication of capability gaps between the operator and the acquisition, test and evaluation, and resource management communities. The document formats and review processes specified in reference c are mandatory and shall be used throughout the DOD for all acquisition programs regardless of acquisition category (ACAT).

a. JCIDS Document Relationships. Figure A-3 illustrates some of the more common relationships between JCIDS documents.

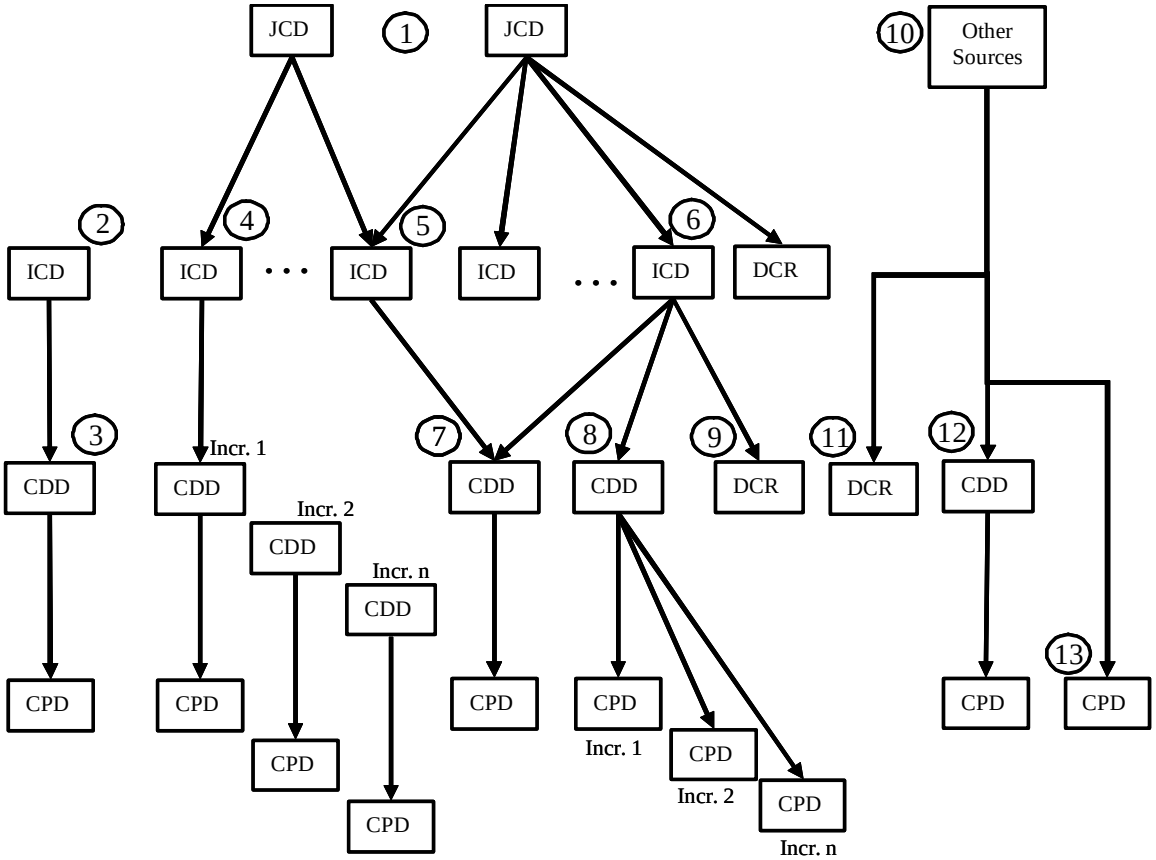

Figure A-3: JCIDS Document Relationships

(1) A JCD can be the source for one or more ICDs or DCRs. Each ICD or DCR will be based on an analysis of one or more of the capability gaps described in the JCD.

(2) The sponsor may develop an ICD without being directly related to a JCD. In these cases, the sponsor will base the CBA upon sponsor developed or existing joint or Service concepts or CONOPs. The sponsor will perform the requisite JCIDS analysis and submit the ICD for approval.

(3) An ICD may be the source for a single CDD with a resultant CPD.

(4) An ICD may be the source for a system or a SoS that will require incremental development under an evolutionary acquisition strategy. This requires a CDD and a CPD for each increment of the system or SoS.

(5) Two or more JCDs may provide the source material for one ICD. For example, a battlespace awareness capability may apply to the JCD for close air support and for joint forcible entry operations.

(6) An ICD may be the source for multiple CDDs where an SoS or FoS is required to deliver the capability.

(a) For an SoS example, the ICD for a capability for precision strike could result in a CDD for the aircraft, separate from the CDD for the munitions.

(b) For an FoS example, the Army develops an ICD for a capability to provide rapid transport of passengers or cargo, which results in a CDD for an Army fixed-wing solution. The Marine Corps may use that same ICD as the basis for developing a rotary-wing solution CDD.

(7) Two or more ICDs may be the source for a single CDD. For example, an ICD for long-range heavy lift transport and an ICD for air-to-air refueling may be combined to justify a single aircraft.

(8) A CDD may be used for two or more CPDs where incremental development under an evolutionary acquisition strategy is used.

(9) A joint DCR may be developed based upon the analysis in an ICD. For example, an ICD may identify several capability gaps. The analysis for those gaps indicates that one or more may be partially or wholly satisfied through a non-materiel change. This becomes the basis for the joint DCR.

(10) Other sources may be used to justify entering the JCIDS process without a JCD or ICD. These sources include combatant commander IPL, joint

and Service lessons learned, joint assessments (e.g., War on Terrorism), JUONs, Service urgent needs, IED defeat initiatives, JCTDs/ACTDs, qualified prototype projects, and quick reaction technology projects. Once the JROC has validated the gap identified in the source, the sponsor can initiate development of a CDD or CPD as appropriate.

(11) A joint DCR may be developed directly from many sources, including the result of an experiment, lessons learned, or other sources.

(12) A CDD may be based on these other sources if the capability solution requires additional development prior to fielding.

(13) A CPD may be based on these other sources if the capability solution does not require development effort (i.e., a non-developmental item) or is a commercial-off-the-shelf solution and is not being implemented as part of a broader DCR.

b. Performance Attributes and KPPs. The CDD and CPD state the operational and support-related/sustainment performance attributes of a system that provides the desired capability required by the warfighter -- attributes so significant that they must be verified by testing and evaluation. The documents shall designate as KSAs the specific attributes considered essential to the development of an effective military capability. Those KSAs that are critical to the delivery of an effective capability or make a significant contribution to the characteristics of the future joint force as defined in the CCJO shall be identified as KPPs. Additional discussion of attributes and KPPs is provided in reference c.

c. Acquisition Program Baseline (APB) KPP Procedures. APBs are described in reference e as establishing program threshold and objective values for the minimum number of cost, schedule, and performance attributes that describe the program over its life cycle. The CDD and CPD provide the basis for the performance section of the acquisition strategy and APB, with the KPPs inserted verbatim into the APB.

5. JCIDS Document Review, Validation, and Approval Process. The staffing process prepares the document for review by the lead FCB and validation and approval by the appropriate authority as defined in reference c. The first step in the review process is the determination of the JPD and the designation of a lead FCB and supporting FCBs, as appropriate.

a. Based on the content of the submission and in his capacity of Gatekeeper, the Joint Staff Vice Director, J-8, will assign a JPD of “JROC Interest,” “Joint Integration,” “Joint Information,” or “Independent” to the document. This designation determines the JCIDS validation and approval process and the potential requirement for certifications/endorsements.

(1) The JROC Interest designation will apply to all ACAT I/IA programs and ACAT II and below programs where the capabilities have a significant impact on joint warfighting; a potentially significant impact across Services; or interoperability in allied and coalition operations. JCDs and joint DCRs will be designated as JROC Interest. This designation may also apply to intelligence capabilities that support DOD and national intelligence requirements. These documents will receive all applicable certifications, including a weapon safety endorsement when appropriate, and be staffed through the JROC for validation and approval. An exception may be made for ACAT IA programs without significant impact on joint warfighting (i.e., business-oriented systems). These programs may be designated either Joint Integration, Joint Information, or Independent.

(2) The Joint Integration designation will apply to ACAT II and below programs where the capabilities and/or systems associated with the document do not significantly affect the joint force and an expanded review is not required. Staffing is required for applicable certifications (IT and national security systems (NSS) interoperability and supportability and/or intelligence and for a weapon safety endorsement when appropriate). Once the required certification(s)/weapon safety endorsement are completed, the document may be reviewed by the FCB. Joint Integration documents are validated and approved by the sponsoring component.

(3) The Joint Information designation applies to ACAT II and below programs that have interest or potential impact across Services or agencies but do not have significant impact on the joint force and do not reach the threshold for JROC Interest. No certifications or endorsements are required. Once designated Joint Information, staffing is required for informational purposes only and the FCB may review the document. Joint Information documents are validated and approved by the sponsoring component.

(4) The Independent designation will apply to ACAT II and below programs where the capabilities and/or systems associated with the document do not significantly affect the joint force, an expanded review is not required and no certifications or endorsements are required. Once designated Independent, the FCB may review the document. Independent documents are validated and approved by the sponsoring component.

b. Details regarding the review and staffing process are provided in reference c. During this staffing process, all combatant commands, Services, Defense agencies, staff elements within the Office of the Secretary of Defense (OSD), and the Joint Staff are given the opportunity to provide comment and electronically concur/non-concur on each document.

6. Certifications and Endorsements. As part of the staffing process for each JCIDS document with JPDs of JROC Interest and Joint Integration,

appropriate certifications and endorsements will be processed. Reference c provides the definitions of the certifications and endorsements and the process for receiving them.

ENCLOSURE B

POLICY

1. This instruction is based on the need for a joint concepts-centric capabilities identification process that will allow joint forces to meet the full range of military operations and challenges of the future. According to the CCJO, meeting these challenges involves a transformation to a knowledge-empowered, networked, interoperable, expeditionary, adaptable/tailorable, enduring/persistent, precise, fast, resilient, agile, and lethal joint force (reference g). To achieve substantive improvements in joint warfighting, interoperability, and sustained readiness in the battlespace of the future, coordination among DOD components, other federal departments and agencies, and multinational military partners is essential from the start of the JCIDS process. That process will establish the linkage between the joint concepts, Service concepts, the analysis needed to identify capabilities required to execute the concepts, and the systems delivering and sustaining those capabilities. Ensuring the combatant commanders have the ability to influence and engage in the JCIDS process is an important factor in achieving delivery of capabilities to address their needs. The combatant commands are encouraged to engage with the FCBs, Services, and agencies during the up-front assessment process. They are also invited to be an active part of the formal JROC, Joint Capabilities Board (JCB), and FCB processes.

2. To accomplish this transformation, the Department of Defense is implementing processes that assess existing and proposed capabilities in light of their contribution to future joint, allied, and coalition operations. The process must produce capability proposals/documents that consider and integrate the full range of joint DOTMLPF and policy solutions in order to advance joint warfighting in integrated operations in a unilateral and multinational context. DOTMLPF includes analysis of the entire life cycle, including the sustainment; environment, safety, and occupational health (ESOH); and all human systems integration (HSI) domains.

3. New solution sets must be crafted to deliver technologically sound, safe, testable, sustainable, and affordable increments of militarily useful capability that consider all elements of performance critical to future operations. JCIDS implements the evolutionary acquisition approach to capability development (reference e and h). There are two approaches for evolutionary acquisition: spiral and incremental development. All capabilities shall be defined, developed, tested and evaluated, procured, and sustained with consideration given to leveraging the unique capabilities of other DOD components, international systems from allies and cooperative opportunities, and with consideration of applicable US-ratified materiel international standardization

agreements. Potential solutions may include an FoS that takes different approaches to filling the capability gap, each addressing operational considerations in a different way. Alternatively, the solution may require an SoS approach to fill a capability gap. The FoS and SoS materiel solutions may also require systems delivered by multiple sponsors and materiel developers. The process to identify capability gaps and potential materiel and non-materiel solutions must be supported by a robust analytical process that objectively considers a range of operating, maintenance, sustainment, and acquisition approaches and incorporates innovative practices -- including best commercial practices, HSI, systems engineering (including safety and software engineering), collaborative environments, modeling and simulation, and electronic business solutions. It is expected any resultant materiel solution will be verified through testing conducted in the expected joint operational environment to demonstrate joint interoperability and, when appropriate, net-readiness.

4. This instruction uses DOD 5000 series terminology for acquisition phases; refer to National Security Space Acquisition Policy (NSSAP) 03-01 for definition of the acquisition phases for space programs, and NRO Directive 7 for guidance on the acquisition of NRO systems. Document formats and processes in reference c are mandatory for all DOD capabilities documents for ACAT programs. Where appropriate and with validation authority approval, mandatory documentation formats provided in reference c may be tailored to implement the intent of this instruction for specific programs, such as IT systems, shipbuilding, and national security space systems. Requests for exceptions to this policy must be directed to the Joint Staff Director, J-8 (DJ-8).

5. The JCIDS process is a deliberate process designed for addressing future needs. Fielding capabilities to address immediate needs in the year of execution is done through the JUON process (reference i). Sponsor and combatant command compliance with the JCIDS process is not required to support fielding an immediate solution to a warfighter's urgent operational needs. Urgent needs will be worked through the Joint Rapid Acquisition Cell (JRAC) and/or the appropriate combatant command, Service, or agency process. However, complying with the JCIDS process is required for the long-term solution, sustainment activities, or to transition the solution into a program of record. Fielding of immediate needs is not intended to create placeholders for future funding or as a means to bypass the normal capabilities and acquisition processes in references d and e.

6. The JROC will validate the needed capability and approve all JROC Interest documents. The JCB may validate all JROC Interest documents where the potential or assigned ACAT is II. The lead FCB may validate all JROC Interest documents where the potential or assigned ACAT is III or below. All approvals will be documented in a formal JROC Memorandum signed by the Chairman of the JROC.

7. JCTDs, ACTDs, and qualified prototype projects will comply with the JCIDS process as they transition into the acquisition process.

8. The Knowledge Management/Decision Support (KM/DS) Tool is the Joint Staff automated tool for processing, coordination, and repository functions for JCIDS documents. The KM/DS Tool is located on the SIPRNET Web site at https://jrockmds1.js.smil.mil/guestjrcz/gbase.guesthome.

9. Documents that were approved under the previous versions of this instruction remain valid, except as detailed below:

a. JROC-approved mission-area ICDs can be used as the baseline for follow-on CDDs. No new mission area ICDs will be accepted for approval. At the next review or update of approved mission-area ICDs, the appropriate FCB will provide advice and assistance to the document sponsor on converting to a JCD, ICD, or CDD as appropriate. All mission-area ICDs must be converted or they will be rescinded by June 2008.

b. No new operational requirements documents (ORDs) will be accepted. ORD updates and annexes, CDDs, and CPDs developed in accordance with this instruction will be accepted to support capability development. ORD updates and annexes will comply with the format instructions in CJCSI 3170.01B and incorporate the mandated KPPs to include: net-ready, force protection, survivability, and materiel availability. A validated and approved ORD developed under a previous version of this instruction can be used for capability development (between Milestone B and C), but it may only be used to support a Milestone B or C decision in lieu of a CDD or CPD with approval from the Joint Staff/J-8.

c. Draft JCIDS documents that entered into coordination prior to approval of this instruction are not required to change their format to comply with this instruction and accompanying manual.

10. IT systems with a developmental cost exceeding $15 million remain subject to this document. The spiral development approach for IT systems requires a variation to the application of the JCIDS documentation. A JCD or ICD will be required for initiation of any new IT capability development. The CDD will be developed describing the objective of up to 5 years of fielding the software. The CDD will be validated and approved once for all of the software fieldings over that time. A CPD will only be required if the IT system will be going through a formal operational test acceptance and a Milestone C decision (typically a major automated information system (MAIS) program). Further guidance will be provided in reference c.

11. For sustaining existing capabilities, a new ICD, CDD, or CPD is not required to retain or restore capabilities of fielded systems that have an approved ORD or JCIDS document. For example, subsystems that have approved performance threshold/objective parameters but are no longer able to meet those parameters can be updated or replaced to meet threshold/objective values under the authority of the approved JCIDS document.

12. For planned upgrades to an operational ACAT II or below system (previously called pre-planned product improvements), technology refresh, or recapitalization of existing capabilities, a new or updated CDD is required if the change expands the capabilities beyond the objective values of the previously approved system performance attributes. If the change improves the performance of the system but the performance remains between the threshold and objective values, a new or updated JCIDS document is not required. If the performance attribute has no established threshold and objective, the need for a new or updated CDD will be determined by the sponsoring component. For upgrades, technology refresh, or recapitalization of operational ACAT I systems, the requirement for a new or updated CDD will be determined by the Joint Staff/J-8 and the lead FCB.

13. When a capability is being completely delivered through a commercial-off-the-shelf solution with no development or significant integration required or by a non-developmental item, a CDD is not required unless directed by the MDA. If there is no ICD, the development of the CPD should be supported by a JUON, lessons learned, JCTD/ACTD, etc., that defines the capability and has been previously validated by the JROC.

14. JCIDS documents in the staffing/approval process prior to the implementation of this instruction are not required to implement the new KPP requirements unless directed by the JROC.

ENCLOSURE C

RESPONSIBILITIES

1. Joint Requirements Oversight Council (JROC). Title 10 responsibilities of the JROC are identified in reference a, and the JROC processes are delineated in reference u.

a. The JROC reviews programs designated as JROC Interest and supports the acquisition review process. The JROC may review JCIDS documents or any other issues that may have joint interest. The JROC will also review programs at the request of the Secretary of Defense, Deputy Secretary of Defense, USD(AT&L), ASD(NII)/DOD Chief Information Officer (CIO), Under Secretary of the Air Force (as DOD Executive Agent for Space), or the DNI MRB.

b. The JROC will manage FCBs in accordance with reference s.

c. For JROC Interest documents, the JROC will validate the KPPs and approve the documents based on recommendations from the lead and supporting FCBs.

d. The JROC ensures the joint DOTMLPF and/or policy recommendations resulting from joint concept development and experimentation are integrated within the JCIDS process.

2. Joint Capabilities Board (JCB). The JCB processes and overall responsibilities are delineated in reference u.

a. For JROC Interest documents that are ACAT I, the JCB will assess the documents based on recommendations from the lead and supporting FCBs and forward them to the JROC for validation and approval.

b. For JROC Interest documents that are ACAT II, the JCB will validate the KPPs and approve the documents based on recommendations from the lead and supporting FCBs. Unresolved issues will be referred to the JROC for decision.

3. Functional Capabilities Boards (FCB). Each FCB is responsible for all aspects, materiel and non-materiel, of its assigned functional area(s). Each FCB will seek to ensure that the joint force is best served throughout the JCIDS and acquisition process. JCIDS-specific FCB responsibilities are identified in reference s and include:

a. Ensure that DOTMLPF and policy aspects of new capabilities are being appropriately considered in the JCIDS documents. This includes overarching DOTMLPF or policy changes necessary to meld an FoS or SoS with multiple CDDs and CPDs into an effective capability.

b. For JROC Interest documents that are ACAT I and II, the FCB will assess the documents and formulate a recommendation before forwarding them to the JCB/JROC for validation and approval. The lead FCB will coordinate with the supporting FCB(s) to ensure all aspects of a JCIDS document are evaluated. Where the Gatekeeper has identified a supporting FCB to provide enhanced support, the supporting FCB will provide an independent assessment and recommendation to the JCB/JROC.

c. For JROC Interest documents that are ACAT III and below, the FCB will validate the KPPs and approve the documents. Unresolved issues will be referred to the JCB/JROC for decision.

d. The FCB(s) will participate in cross-FCB integration meetings to ensure cross-functional integration of capabilities, prioritization of capability gaps, and excesses across the FCB portfolios to identify potential tradeoffs between capability areas, to evaluate the effectiveness of and potential improvements to the FCB process, and to provide recommendations to the JROC.

e. Assist in the adjudication of comments written during the JCIDS staffing process. If critical comments cannot be adjudicated during staffing, the FCB will make a recommendation to the JCB/JROC on the resolution of the comments.

f. FCBs will evaluate the KPPs submitted by the sponsor and identify other potential KPPs that warrant consideration by the JROC. The lead FCB will coordinate across supporting FCBs on the selection and validation of KPPs.

g. Lead a capabilities-based assessment on the JOpsC, as assigned by the JROC, leveraging the expertise of the Services and combatant commands. Develop the appropriate JCD as a result of the assessment. Complete the CBA if directed by the JROC.

h. Ensure that Director, Program Analysis and Evaluation (DPA&E), USD(AT&L) and ASD(NII)/DOD CIO have the opportunity to participate in or review all FCB activities. When the FCB is formulating a recommendation that may impact directly upon an MDA or other principal staff assistant, that office

will be invited to co-chair the FCB. DPA&E, USD(AT&L), and ASD(NII)/DOD CIO should be engaged early to ensure that the CBA adequately addresses a sufficient range of materiel approaches.

i. Invite the MRB staff to send a representative to attend or co-chair the FCB meeting when proposals/documents potentially impacting national intelligence capabilities come to the FCB for validation or approval.

j. Request, as necessary, DOD components to support FCB activities in support of this instruction. Tasking issues that cannot be resolved between the FCB(s) and the component(s) will be forwarded to the JROC (through the JCB) for resolution. When support from organizations reporting to the Secretary of Defense is required, the FCB Chairman will seek this support from the responsible office within OSD.

k. Ensure that overarching joint DCRs are consistent with the JOpsC, and support joint warfighting capability needs.

l. Evaluate the assigned JPD of all initiatives and make a recommendation to the Gatekeeper to change the JPD as required. Recommendations to change the JPD should be made as quickly as possible prior to the completion of staffing to prevent unnecessary delays.

m. Ensure that appropriate certifications and endorsements have been granted.

n. For each Tier 1 JCA the assigned lead FCB will: maintain and refine individual Tier 1 JCA lexicon and develop and refine subordinate JCA taxonomy with JCA stakeholders; recommend changes to the JCA coordinator; and propose matured JCA lexicon for inclusion into doctrine.

4. FCB Working Groups. The FCB working groups will operate in accordance with reference s. In support of the JCIDS process, each FCB working group will:

a. Coordinate with and assist the sponsor during JCIDS document development to ensure cross-component synchronization of documents and that joint warfighting capability gaps are being adequately addressed.

b. Support the Gatekeeper in determining the JPD and the lead and/or supporting FCBs for each JCIDS document.

c. The lead FCB working group will analyze JCIDS documents and coordinate with supporting FCB working groups to ensure all joint and coalition warfighting aspects have been considered in the analysis. Provide context and a summary of the FCB working group's independent assessment

regarding JCIDS documents to the FCB when considering capabilities documents.

d. FCB working groups will evaluate the KPPs submitted by the sponsor and identify other potential KPPs that warrant consideration by the JROC. The lead FCB will coordinate across supporting FCBs on the selection and validation of KPPs.

e. Supporting FCB working groups will coordinate with and support the lead FCB working group analysis of JCIDS documents and will provide supporting context information and a recommendation to the lead FCB. As directed by the Gatekeeper, the supporting FCB may be required to brief their recommendations to the JCB/JROC.

f. Provide a summary analysis and recommendation to the FCB on validation and/or approval of JCIDS documents.

5. Sponsor. Within the JCIDS process, the sponsor is expected to:

a. Lead the JCIDS CBA required when developing the ICD and associated integrated architectures, while engaging and collaborating with appropriate organizations. The sponsor should work closely with the appropriate FCBs during the analysis process to ensure the analysis is truly joint.

b. Perform CBAs and develop ICDs as directed by the JROC for capability gaps identified in JCDs.

c. Provide support to combatant commands, combat support agencies (CSA), and FCBs in developing JCDs.

d. Make affordability determinations in the evaluation of various approaches to delivering capabilities to the warfighter.

e. Develop JCIDS documentation as specified in this instruction and present this documentation for review through the KM/DS tool.

f. Resolve issues that arise during the staffing, certification, and validation processes. All comments will be adjudicated prior to JCB and JROC briefings. Unresolved critical comments will be briefed to the JCB or JROC for decision.

g. When the system contributes to FoS or SoS capabilities, coordinate with sponsors of the related joint DCRs, CDDs, and CPDs to synchronize development and delivery of the systems and required overarching DOTMLPF and policy changes.

h. Present briefings to decision bodies, as required.

i. Validate Joint Integration documents after receiving required certifications and endorsements and validate all documents designated Joint Information or Independent.

j. Coordinate/collaborate with non-DOD agencies and departments on the development of interagency capabilities.

k. Develop a CDD, CPD, or joint DCR, as appropriate, to support the acquisition or fielding of a capability demonstrated through a JCTD/ACTD, qualified prototype project, or quick reaction technology project.

l. When the sponsor disagrees with the assigned JPD, appeal to the FCB or the Gatekeeper by providing a memorandum with justification for changing the JPD.

6. Joint Staff and DIA. The Joint Staff and DIA provide review, coordination, and certification/endorsement functions in support of the JCIDS process. These functions include IT and NSS interoperability and supportability certification, intelligence certification, threat validation and munitions insensitivity certification, and safe weapons endorsement. Certification/ endorsement process details are provided in reference c.

a. Joint Staff Director, J-1. Joint Staff/J-1 is the office of primary responsibility for joint manpower and personnel reviews. In accordance with references v and w, Joint Staff/J-1 will review all joint manpower and personnel requirements and issues identified in joint DCRs. It will review JCIDS documents for adequacy of joint manpower and personnel planning.

b. Joint Staff Director, J-2, and Director, DIA. Joint Staff/J-2 will review and conduct intelligence certification in accordance with reference x. DIA will also perform a threat validation. Additionally, Joint Staff/J-2 will conduct intelligence certification of requirements, deficiencies, and solutions documented in the information support plans in accordance with references x and y.

c. Joint Staff Director, J-3. Joint Staff/J-3 is the office of primary responsibility for the current Global Command and Control (GCC) family of systems, future command and control capabilities, and the common operational picture in accordance with reference z. Joint Staff/J-3 will review all GCCS functional capabilities identified in CDDs and CPDs as well as non-materiel changes proposed in joint DCRs. It will review and comment on all JCIDS documents designated as JROC Interest or Joint Integration for operational suitability, sufficiency, and supportability to the warfighter.

d. Joint Staff Director, J-4

(1) Joint Staff/J-4 is responsible for joint facilities reviews. It will review JCIDS documents for adequacy of facility planning and design criteria and ESOH considerations regarding basing and operation. Additionally, when documents include materiel solutions, Joint Staff/J-4 will review logistics and supportability issues, to include ensuring the system's initial and/or temporary facility requirements are within existing engineer force capabilities.

(2) Joint Staff/J-4 will review and comment on the sustainment (materiel availability) KPP and its supporting KSAs (materiel reliability and ownership cost) for all JROC Interest CDDs and CPDs.

(3) Joint Staff/J-4 will review and comment on the energy efficiency analysis and recommendations (e.g., selectively apply an energy efficiency KPP or not) for all JROC Interest CDDs and CPDs.

e. Joint Staff Director, J-5. The Joint Staff/J-5 will act as CJCS Executive Agent for implementing JROC decisions regarding multinational and interagency requirements and joint DCRs with multinational or interagency impacts. The Joint Staff/J-5 will provide oversight on alignment between JCIDS proposals/documents, strategy, and CJCS priorities.

f. Joint Staff Director, J-6

(1) Joint Staff/J-6 will perform IT and NSS interoperability and supportability certifications on all CDDs and CPDs designated as JROC Interest or Joint Integration in accordance with references y, aa, and bb. This certification will include evaluation of compliance with the DOD Net-Centric Data Strategy (reference cc) through collaboration with the communities of interest that apply to these capabilities. Additionally, Joint Staff/J-6 will be the lead for validating the net-ready KPP (NR-KPP) and will resolve all issues associated with the NR-KPP (reference bb).

(2) Joint Staff/J-6 will ensure that CDDs and CPDs include "embedded instrumentation" in system tradeoff studies and design analyses.

g. Joint Staff Director, J-7

(1) As the CJCS lead for the JOpsC, Joint Staff/J-7 will oversee the writing, development, and revision of the JOpsC (reference q). It will review recommendations resulting from assessment and experimentation that will affect DOTMLPF and/or policy and forward those recommendations to the JROC through the appropriate FCB.

(2) Joint Doctrine, Training, and Leadership/Education Review. Joint Staff/J-7 will work with combatant commanders, Services, Joint Staff, OSD,

and Defense agencies to ensure each joint DCR adequately addresses potential impacts on joint, multinational and interagency warfighting, and other operations with respect to joint doctrine (reference dd), joint training (references ee and/or ff), and joint leadership and education (reference gg) resulting from implementation of the proposed concept or employment of the system.

(3) Joint Staff/J-7 will review and comment on the recommendations pertaining to the inclusion of the selectively applied systems training KPP for all JROC Interest CDDs, CPDs, and associated analysis of alternatives (AoA).

(4) As the JCA Coordinator, Joint Staff/J-7 will facilitate and oversee future JCA development, host planner-level JCA refinement meetings, and F/GO level reviews and champion JCA lexicon implementation across DOD processes.

h. Joint Staff Director, J-8. Joint Staff Director, J-8, is the appointed JROC Secretary whose staff makes up the JROC Secretariat. Specific J-8 responsibilities are outlined in reference u. Other responsibilities within the directorate are as follows (specific divisions responsible are in parenthesis):

(1) Serve as the "Gatekeeper" of the JCIDS process (Joint Staff Vice Director, J-8). With the assistance of J-6, J-7, the FCB working group leads, and USJFCOM, the Vice Director will assign a JPD and evaluate all JCIDS documents.

(a) The Gatekeeper will chair meetings of the General/Flag Officer chairs of the FCBs to ensure cross-functional area integration, prioritization of capabilities across the FCB portfolios, and identification of FCB best practices for improvement of the FCB processes.

(b) The Gatekeeper will make the initial determination on the following:

1. JPD assignment and who has validation and/or approval authority.

2. The lead and supporting FCBs.

3. Assigned J-8 Capabilities and Acquisition Division lead.

(2) Coordinate with the MRB for those capabilities with a parallel development path between the defense and national intelligence communities.

(3) Evaluate the recommendations of the lead FCB and/or sponsor to change an assigned JPD and, if necessary, adjust the assigned JPD to appropriately reflect the joint warfighting impact of the proposal.

(4) Evaluate the recommendation of the lead and supporting FCBs to change the FCB assignments and, if necessary, make appropriate changes.

(5) Review all joint DCRs and assess whether existing joint organizations effectively support integration and operational employment of the proposed system or concept (Joint Staff/J-8 Forces Division).

(6) Review all joint DCRs for proposed materiel solutions and staff materiel issues in accordance with the applicable sections of reference c (Joint Staff/J-8 Capabilities and Acquisition Division).

(7) Coordinate all joint DCRs entering JCIDS with the following responsibilities (Joint Staff/J-8 Joint Capabilities Division):

(a) Link JROC and JCIDS process to joint transformation efforts in current DOTMLPF and policy.

(b) Facilitate joint DCR staffing and review from entry into KM/DS through final JROC approval.

(c) Coordinate the objective assessment of joint DCRs by functional process owners (FPOs) in each consideration of DOTMLPF and policy in accordance with reference c.

(d) Synchronize and track implementation of JROC-endorsed joint DCRs via the Joint Transformation Integration System (JTIS) database.

(e) Facilitate preparation of JROCMs from JROC-approved joint DCRs.

(f) Coordinate quarterly DOTMLPF action review meetings with the JCB to review status of outstanding joint DCRs.

(g) Attend JROC, JCB, FCB, and FCB working group meetings when joint DCRs are being briefed or discussed to assist in facilitating the recommendations for JROC approval.

(8) Assess the readiness and responsiveness of CSAs to support operational forces (Joint Staff/J-8 Support Agency Review and Assessment Office).

(a) Review all CSA-submitted JCIDS documents to assess impact on identified CSA warfighting support capability gaps.

(b) Recommend CSA JCIDS actions to correct identified warfighting support capability gaps.

(c) Submit CSA JCIDS action recommendations to the Gatekeeper for dissemination to the appropriate FCB and action in accordance with reference hh.

(9) Weapons or munitions related JCIDS documents will be designated JROC Interest or Joint Integration. The J-8/Deputy Director for Force Protection (DDFP) shall provide an endorsement to the JROC stating whether the weapon capabilities, performance parameters, and attributes are adequately prescribed in the JCIDS document for safe handling, storage, transportation, or use in joint operating environments. The endorsement will be coordinated through the force protection FCB prior to signature. This endorsement may identify potential operational limitations due to potential hazards when the weapon is handled, stored, transported, or used in joint operating environments.

(a) Establish the Joint Weapon Safety Technical Advisory Panel (JWSTAP) per reference k. The JWSTAP is to advise the DDFP on weapon safety issues pursuant to advising the JROC during the review and deliberation of all weapon and munition capability JCIDS documents. The JWSTAP reviews and provides recommended revisions to the capability documents. The JWSTAP review is focused on the capability attributes and metrics of a given weapon to identify potential safety issues resulting from interaction between the proposed weapon and other capabilities existing within the same joint operating environment.

1. The JWSTAP provides subject matter expertise review and comments to the DDFP regarding the safe employment, storage, and transport of munitions and weapons in joint operating environments. The JWSTAP will advise the DDFP on weapon capability documents requiring validation and approval within JCIDS. The JWSTAP review is focused on the capability attributes and metrics of a given weapon or munition to identify potential safety issues resulting from interaction between the proposed weapon and other capabilities existing within the same joint operating environment. Safety concerns identified by the JWSTAP are presented to the DDFP with recommended revisions to the capability document to reduce or eliminate the identified safety concern while maintaining the desired operational effectiveness of the weapon. The DDFP will forward the proposed recommendations to the FP FCB for review and endorsement. The FP FCB shall inform the capability sponsor of the concerns prior to completing joint staffing. The FP FCB will then forward their endorsement to the JROC, informing the JROC of any safe weapons capability restrictions/limitations.

2. Specifically, the JWSTAP shall:

a. Serve as a source of expert consultation for program sponsors and the DDFP regarding weapon safety aspects of joint operating environments. Participate, as requested, in the development and review of

draft JCIDS documents prior to formal submittal into the JCIDS process. Collaborate with program sponsors and the DDFP to develop possible solutions to issues.

b. Review each weapon JCIDS document to ensure weapon safety is addressed with respect to provisions for safe operation, handling, storage, and transport integration into the joint operating environments. Prepare a report for the DDFP documenting the results of the JWSTAP review of the JCIDS document containing the recommended revisions to address joint operating environments safety concerns.

(b) Safety concerns identified by the JWSTAP are presented to the DDFP with recommended revisions to the capability document to reduce or eliminate the identified safety concerns while maintaining the desired operational effectiveness of the munition. If the safety recommendations could affect operational effectiveness, the JWSTAP will also provide possible mitigation strategies to limit the impact on operational effectiveness.

(c) The DDFP will forward the proposed recommendations to the Force Protection FCB for review and subsequent endorsement to the JROC.

7. Services

a. The Services will coordinate on JROC Interest documents and may review Joint Integration, Joint Information, and Independent documents developed by other sponsors to identify opportunities for cross-component utilization and harmonization of capabilities. This coordination and review may lead to a recommendation to change the JPD.

b. The Services are responsible for developing Service-specific operational concepts and experimenting within core competencies, supporting joint concept development with Service experimentation, providing feedback from the field, supporting joint experimentation, joint testing and evaluation, and overseeing integration of validated joint DCRs.

8. Combatant Commands

a. The combatant commands have been assigned specific mission responsibilities in the Unified Command Plan (UCP). For those missions, they will comment on all capabilities documents that fall within their assigned missions and act as the advocate or advisor to the JROC as required. The combatant commands will be provided the opportunity to review and comment on all documents designated as JROC Interest before they are validated and approved. Combatant commands may review and comment on documents designated as Joint Integration during J-2 and J-6 certification processes and the J-8 safe weapons endorsement prior to sponsor validation and approval.

Combatant commands are also given the opportunity to review and comment on Joint Information documents as desired.

b. Combatant commands may conduct JCIDS analyses and submit a JCD that identifies capabilities needed and gaps or redundancies that exist (see reference c). The JROC will then task the appropriate sponsor(s) to perform the CBA and submit complete ICD(s) for approval. The combatant command may perform the CBA with its resources and submit the completed ICD for approval. The combatant command leverages the expertise of its components and may coordinate and receive assistance from a sponsor in this effort. In many circumstances, it may be appropriate for the combatant commander to identify initiatives to the responsible component. The component may then coordinate appropriate analysis and documentation activities.

c. US Joint Forces Command

(1) CDRUSJFCOM is functionally responsible to the Chairman for leading joint concept development and experimentation (CDE) by integrating joint experimentation into the development of all joint concepts (reference q). As the DOD Executive Agent for joint warfighting experimentation, CDRUSJFCOM develops combined operational warfighting concepts and integrates multinational and interagency warfighting transformation efforts with joint CDE in coordination with other combatant commands. USJFCOM also coordinates the efforts of the Services, combatant commands, and Defense agencies to support joint interoperability and future joint warfighting capabilities and will coordinate with Joint Staff/J-7 and concept authors to translate actionable recommendations into JCDs and joint DCRs as appropriate. They will forward JCDs and joint DCRs to the JROC through the Joint Staff/J-8 for coordination, recommendation, and endorsement. USJFCOM will also review all JCDs and ICDs for potential areas for future joint experimentation efforts.

(2) CDRUSJFCOM will serve as the Chairman's advocate for joint warfighting interoperability and as the lead integrator for joint C2 capabilities. USJFCOM will provide the warfighter perspective during the development of joint concepts and integrated architectures to ensure that joint forces have interoperable systems. USJFCOM will support the JROC by:

(a) Leading the development of joint warfighting C2 capabilities, architectures, and operational concepts.

(b) Identifying, consolidating, prioritizing, and synchronizing materiel and non-materiel gaps and overlaps to joint C2 functional capabilities through the FCBs in the JCIDS process.

d. US Special Operations Command (USSOCOM). Congress has given USSOCOM specific title 10 authority within a unique major force appropriation

category (reference a, section 167). As a result, USSOCOM can establish, validate, and approve USSOCOM capabilities, budget for Joint Integration, Joint Information, and Independent programs, and resource both special operations-specific materiel acquisition programs and joint DCRs. USSOCOM will coordinate on JROC Interest documents and may review Joint Integration, Joint Information, and Independent documents developed by other sponsors to identify opportunities for cross-component utilization and harmonization of capabilities. USSOCOM will forward all capabilities documents to the Gatekeeper for initial determination of JPD and potential review by an FCB. Capabilities documents assigned a JPD of Independent or Joint Information will be returned to USSOCOM for action. Joint Integration documents will be returned to USSOCOM for approval after receipt of the appropriate certifications or endorsements as required. JROC Interest capabilities documents will be forwarded for JROC validation and approval. In the event USSOCOM identifies joint DCRs that may benefit other DOD components, the joint DCR process provides a venue to submit proposals for JROC consideration. CDRUSSOCOM exercises responsibility to ensure the interoperability, supportability, sustainment, and combat readiness of special operations forces and equipment.

9. Other DOD Components

a. Coordinate on JCIDS documents developed by other sponsors to identify opportunities for cross-component utilization and harmonization of capabilities. Make recommendations to the FCB on documents designated as Joint Integration, Joint Information, or Independent that may have broader applicability and therefore should change to JROC Interest designation.

b. Defense agencies and field activities may develop their own JCIDS documents as a DOD component or be asked to manage the results of changes initiated by the combatant commands, Services, or Joint Staff.

ENCLOSURE D

REFERENCES

a. Title 10, United States Code, sections 153, 163, 167, and 181

b. "Transformation Planning Guidance," Secretary of Defense memorandum, April 2003

c. CJCSM 3170.01 Series, "Operation of the Joint Capabilities Integration and Development System"

d. DODD 5000.1, 12 May 2003, "The Defense Acquisition System"

e. DODI 5000.2, 12 May 2003, "Operation of the Defense Acquisition System"

f. National Security Space Acquisition Policy 03-01, December 2004, "Guidance for DOD Space System Acquisition Process"

g. "Capstone Concept for Joint Operations," Secretary of Defense memorandum, August 2005

h. DODD 8000.1, 27 February 2002, "Management of DOD Information Resources and Information Technology"

i. CJCSI 3470.01 Series, "Rapid Validation and Resourcing of Joint Urgent Operational Needs (JUONS) in the Year of Execution"

j. JROCM 100-05, 16 May 2005, "Modifications to the Operation of the Joint Capabilities Integration and Development System (JCIDS)"

k. JROCM 102-05, 20 May 2005, "Safe Weapons in Joint Warfighting Environments"

l. JROCM 120-05, 13 June 2005, "Policy for Updating Capabilities Documents to Incorporate Force Protection and Survivability KPP(s)"

m. JROCM 062-06, 17 April 2006, "Modifications to the Operation of the Joint Capabilities Integration and Development System"

n. JROCM 161-06, 17 August 2006, "JROC Way Ahead: KPP Study Recommendations and Implementation"

o. JROCM 163-06, 17 August 2006, "Modifications to the Comment Resolution process of the Joint Capabilities Integration and Development System"

p. DODD 2000.19E, 14 February 2006, "Joint Improvised Explosive Device Defeat Organization (JIEDDO)"

q. CJCSI 3010.02 Series, "Joint Operations Concepts Development Process (JOPSC-DP)"

r. DODI 5010.41, 12 September 2005, "Joint Test and Evaluation (JT&E) Program"

s. CJCSI 3137.01 Series, "The Functional Capabilities Board Process"

t. NRO Directive 82-2b, 14 December 2004, "Acquisition Management"

u. CJCSI 5123.01 Series, "Charter of the Joint Requirements Oversight Council"

v. CJCSI 1001.01 Series, "Joint Manpower and Personnel Program"

w. CJCSI 1301.01 Series, "Policies and Procedures to Assign Individuals to Meet Combatant Command Mission-Related Temporary Duty Requirements"

x. CJCSI 3312.01 Series, "Joint Military Intelligence Requirements Certification"

y. DODI 4630.8, 30 June 2004, "Procedures for Interoperability and Supportability of Information Technology (IT) and National Security Systems (NSS)"

z. CJCSI 6721.01 Series, "Global Command and Control Management Structure"

aa. DODD 4630.5, 5 May 2004, "Interoperability and Supportability of Information Technology (IT) and National Security Systems (NSS)"

bb. CJCSI 6212.01 Series, "Interoperability and Supportability of Information Technology and National Security Systems"

cc. DODD 8320.02, 2 December 2004, "Data Sharing in a Net-Centric Department of Defense"

dd. CJCSI 5120.02 Series, "Joint Doctrine Development System"

ee. CJCSI 3500.01 Series, "Joint Training Policy for the Armed Forces of the United States"

ff. CJCSI 3500.02 Series, "Joint Training Master Plan 2002 for the Armed Forces of the United States"

gg. CJCSI 1800.01 Series, "Officer Professional Military Education Policy"

hh. CJCSI 3460.01 Series, "Combat Support Agency Review Team Assessments"

GLOSSARY

PART I - ACRONYMS

ACAT	acquisition category
ACTD	Advanced Concept Technology Demonstration
AoA	analysis of alternatives
APB	acquisition program baseline
ASD(NII)	Assistant Secretary of Defense (Networks and Information Integration)
C2	command and control
CBA	capabilities-based assessment
CBP	capabilities-based planning
CCJO	Capstone Concept for Joint Operations
CDD	capability development document
CDE	concept development and experimentation
CDRUSJFCOM	Commander, US Joint Forces Command
CIO	Chief Information Officer
CJCS	Chairman of the Joint Chiefs of Staff
CJCSI	Chairman of the Joint Chiefs of Staff Instruction
CJCSM	Chairman of the Joint Chiefs of Staff Manual
CONOPs	concept of operations
CPD	capability production document
CSA	combat support agency
DAR	doctrine, organization, training, materiel, leadership and education, personnel, and facilities action review
DCR	doctrine, organization, training, materiel, leadership and education, personnel, and facilities change recommendation
DDFP	Deputy Director for Force Protection
DJ-8	Joint Staff Director, J-8
DIA	Defense Intelligence Agency
DNI	Director of National Intelligence
DOD	Department of Defense
DODD	Department of Defense directive
DODI	Department of Defense instruction
DOTMLPF	doctrine, organization, training, materiel, leadership and education, personnel, and facilities
DPA&E	Director, Program Analysis and Evaluation

ESOH	environment, safety, and occupational health
FAA	functional area analysis
FCB	Functional Capabilities Board
FNA	functional needs analysis
FoS	family of systems
FPO	functional process owner
FSA	functional solution analysis
GCC	Global Command and Control
HSI	human systems integration
ICD	initial capabilities document
IED	improvised explosive device
IPL	integrated priority list
IT	information technology
J-8	Force Structure, Resources and Assessment Directorate, Joint Staff
JCA	joint capability area
JCB	Joint Capabilities Board
JCD	joint capabilities document
JCIDS	Joint Capabilities Integration and Development System
JCTD	Joint Capability Technology Demonstration
JIC	joint integrating concept
JIEDDO	Joint Improvised Explosive Device Defeat Organization
JOC	joint operating concept
JOpsC	Joint Operations Concepts
JPD	joint potential designator
JRAC	Joint Rapid Acquisition Cell
JROC	Joint Requirements Oversight Council
JROCM	Joint Requirements Oversight Council memorandum
JSCP	Joint Strategic Capabilities Plan
JTIS	Joint Transformation Integration System
JUON	joint urgent operational need
JWSTP	Joint Warfighting Science and Technology Plan
JWSTAP	Joint Weapon Safety Technical Advisory Panel
KM/DS	Knowledge Management/Decision Support
KPP	key performance parameter
KSA	key system attribute
MAIS	major automated information system
MDA	milestone decision authority

MPMI	most pressing military issues
MRB	Mission Requirements Board
NR-KPP	net-ready key performance parameter
NRO	National Reconnaissance Office
NSS	National Security Systems
NSSAP	National Security Space Acquisition Policy
ORD	operational requirements document
OSD	Office of the Secretary of Defense
PPBE	planning, programming, budgeting and execution
SIPRNET	SECRET Internet Protocol Router Network
SoS	system of systems
SWarF	Senior Warfighter Forum
UCP	Unified Command Plan
USD(AT&L)	Under Secretary of Defense for Acquisition, Technology, and Logistics
USJFCOM	United States Joint Forces Command
USSOCOM	United States Special Operations Command

PART II – DEFINITIONS

acquisition category (ACAT) - Categories established to facilitate decentralized decision-making and execution and compliance with statutorily imposed requirements. The ACAT determines the level of review, validation authority, and applicable procedures. Reference e provides the specific definition for each ACAT.

acquisition program baseline (APB) - Each program's APB is developed and updated by the program manager and will govern the activity by prescribing the cost, schedule, and performance constraints in the phase succeeding the milestone for which it was developed. The APB captures the user capability needs, including key performance parameters, which are copied verbatim from the capability development document.

Advanced Concept Technology Demonstration (ACTD) - A demonstration of the military utility of a significant new technology and an assessment to clearly establish operational utility and system integrity.

analysis of alternatives (AoA) - The evaluation of the performance, operational effectiveness, operational suitability, and estimated costs of alternative systems to meet a mission capability. The AoA assesses the advantages and disadvantages of alternatives being considered to satisfy capabilities, including the sensitivity of each alternative to possible changes in key assumptions or variables. The AoA is one of the key inputs to defining the system capabilities in the capability development document.

approval - The formal or official sanction of the identified capability described in the capability documentation. Approval also certifies that the documentation has been subject to the uniform process established by the DOD 5000 series.

architecture - The structure of components, their relationships, and the principles and guidelines governing their design and evolution over time.

attribute - A quantitative or qualitative characteristic of an element or its actions.

automated information system - A combination of computer hardware and computer software, data, and/or telecommunications that performs functions such as collecting, processing, storing, transmitting, and displaying information. Excluded are computer resources, both hardware and software, that are: physically part of, dedicated to, or essential in real time to the mission performance of weapons systems; used for weapon system specialized training, simulation, diagnostic test, and maintenance or calibration; or used for research and development of weapon systems.

capabilities-based assessment (CBA) – The CBA is the Joint Capabilities Integration and Development System analysis process that includes three phases: the functional area analysis (FAA), the functional needs analysis (FNA), and the functional solution analysis (FSA). The results of the CBA are used to develop a joint capabilities document (based on the FAA and FNA) or initial capabilities document (based on the full analysis).

capability - The ability to achieve a desired effect under specified standards and conditions through combinations of means and ways to perform a set of tasks. It is defined by an operational user and expressed in broad operational terms in the format of a joint or initial capabilities document or a joint doctrine, organization, training, materiel, leadership and education, personnel, and facilities (DOTMLPF) change recommendation. In the case of materiel proposals/documents, the definition will progressively evolve to DOTMLPF performance attributes identified in the capability development document and the capability production document.

capability based planning (CBP) – The process for planning under uncertainty to provide capabilities suitable for a wide range of modern-day challenges and circumstances while working within an economic framework that necessitates choice.

capability development document (CDD) - A document that captures the information necessary to develop a proposed program(s), normally using an evolutionary acquisition strategy. The CDD outlines an affordable increment of militarily useful, logistically supportable, and technically mature capability. The CDD may define multiple increments if there is sufficient definition of the performance attributes (key performance parameters, key system attributes, and other attributes) to allow approval of multiple increments.

capability gaps - The inability to achieve a desired effect under specified standards and conditions through combinations of means and ways to perform a set of tasks. The gap may be the result of no existing capability, lack of proficiency or sufficiency in existing capability, or the need to recapitalize an existing capability.

capability need – A capability identified through the FAA, required to be able to perform a task within specified conditions to a required level of performance.

capability production document - A document that addresses the production elements specific to a single increment of an acquisition program.

Capstone Concept for Joint Operations (CCJO) - The CCJO is the overarching concept that guides the development of future joint force capabilities. It broadly describes how the joint force is expected to operate 10-20 years in the future in all domains across the range of military operations within a

multilateral environment and in collaboration with interagency and multinational partners. The CCJO describes the proposed end states derived from strategy as military problems and the characteristics of the future joint force (reference g).

certification - A statement of adequacy provided by a responsible agency for a specific area of concern in support of the validation process.

comment priorities

a. critical - A critical comment indicates nonconcurrence in the document, for both the O-6 and flag review, until the comment is satisfactorily resolved.

b. substantive - A substantive comment is provided because a section in the document appears to be or is potentially unnecessary, incorrect, misleading, confusing, or inconsistent with other sections.

c. administrative - An administrative comment corrects what appears to be a typographical, format, or grammatical error.

concept of operations (CONOPs) - A verbal or graphic statement, in broad outline, of a commander's assumptions or intent in regard to an operation or series of operations. The CONOPs frequently is embodied in campaign plans and operation plans; in the latter case, particularly when the plans cover a series of connected operations to be carried out simultaneously or in succession. CONOPs is designed to give an overall picture of the operation. It is included primarily for additional clarity of purpose. Also called a commander’s concept.

DOD 5000 Series - DOD 5000 series refers collectively to DODD 5000.1 and DODI 5000.2, references d and e, respectively.

DOD component - The DOD components consist of the Office of the Secretary of Defense, the Military Departments, the Chairman of the Joint Chiefs of Staff, the combatant commands, the Office of the Inspector General of the Department of Defense, the Defense agencies, DOD field activities, and all other organizational entities within the Department of Defense.

embedded instrumentation - Data collection and processing capabilities integrated into the design of a system for one or more of the following uses: diagnostics, prognostics, testing, or training.

endorsement – A statement of adequacy, and any limitations, provided by a responsible agency for a specific area of concern in support of the validation process.

environment - Air, water, land, living things, built infrastructure, cultural resources, and the interrelationships that exist among them.

environment, safety and occupational health (ESOH) management – Sustaining the readiness of the US Armed Forces by cost effectively managing all installation assets through promotion of safety, protection of human health, and protection and restoration of the environment.

evolutionary acquisition - The preferred DOD strategy for rapid acquisition of mature technology for the user. An evolutionary approach delivers capability in increments, recognizing up-front the need for future capability improvements.

family of systems (FoS) - A set of systems that provide similar capabilities through different approaches to achieve similar or complementary effects. For instance, the warfighter may need the capability to track moving targets. The FoS that provides this capability could include unmanned or manned aerial vehicles with appropriate sensors, a space-based sensor platform, or a special operations capability. Each can provide the ability to track moving targets but with differing characteristics of persistence, accuracy, timeliness, etc.

functional area - A broad scope of related joint warfighting skills and attributes that may span the range of military operations. Specific skill groupings that make up the functional areas are approved by the Joint Requirements Oversight Council.

Functional Capabilities Board - A permanently established body that is responsible for the organization, analysis, and prioritization of joint warfighting capabilities within an assigned functional area.

Functional Capabilities Board (FCB) working group - The analytic support for the FCBs. They perform the review and assessment of Joint Capabilities Integration and Development System documents, work with the sponsors to resolve issues, and make recommendations to the FCB.

functional process owners (FPO) - Joint Staff directorates that have the responsibility for the joint doctrine, organization, training, materiel, leadership and education, personnel, and facilities (DOTMLPF)-selected "joint processes," as shown in the table below.

Critical Consideration DOTMLPF FPO

Joint Doctrine	Joint Staff/J-7
Joint Organizations	Joint Staff/J-8 (J-1 and J-5 support)
Joint Training	Joint Staff/J-7
Joint Materiel	Joint Staff/J-8
Joint Leadership and Education	Joint Staff/J-7
Joint Personnel	Joint Staff/J-1
Joint Facilities	Joint Staff/J-4

Gatekeeper - That individual who makes the initial joint potential designation of Joint Capabilities Integration and Development System documents. This individual will also make a determination of the lead and supporting FCBs for capability documents. The Gatekeeper is supported in these functions by the Functional Capabilities Board working group leads and the Joint Staff/J-6. The Joint Staff Vice Director, J-8, serves as the Gatekeeper.

human systems integration – Defined in reference e, includes the integrated and comprehensive analysis, design and assessment of requirements, concepts and resources for system manpower, personnel, training, safety and occupational health, habitability, personnel survivability, and human factors engineering.

increment - A militarily useful and supportable operational capability that can be effectively developed, produced or acquired, deployed, and sustained. Each increment of capability will have its own set of threshold and objective values set by the user. Spiral development is an instance of an incremental development strategy where the end state is unknown. Technology is developed to a desired maturity and injected into the delivery of an increment of capability.

information assurance - Information operations that protect and defend information and information systems by ensuring their availability, integrity, authentication, confidentiality, and non-repudiation. This includes providing

for restoration of information systems by incorporating protection, detection, and reaction capabilities.

information technology (IT) - Any equipment, or interconnected system or subsystem of equipment, that is used in the automatic acquisition, storage, manipulation, management, movement, control, display, switching, interchange, transmission or reception of data, or information by the executive agency. This includes equipment used by a component directly, or used by a contractor under a contract with the component, which (i) requires the use of such equipment, or (ii) requires the use, to a significant extent, of such equipment in the performance of a service or the furnishing of a product. The term "IT" also includes computers, ancillary equipment, software, firmware and similar procedures, services (including support services) and related resources. Notwithstanding the above, the term "IT" does not include any equipment that is acquired by a federal contractor incidental to a federal contract. The term "IT" includes National Security Systems.

initial capabilities document (ICD) - Documents the requirement for a materiel or non-materiel approach, or an approach that is a combination of materiel and non-materiel, to satisfy specific capability gap(s). It defines the capability gap(s) in terms of the functional area, the relevant range of military operations, desired effects, time and doctrine, organization, training, materiel, leadership and education, personnel, and facilities (DOTMLPF) and policy implications and constraints. The ICD summarizes the results of the DOTMLPF and policy analysis and the DOTMLPF approaches (materiel and non-materiel) that may deliver the required capability. The outcome of an ICD could be one or more joint DCRs or capability development documents.

integrated architecture - An architecture consisting of multiple views or perspectives (operational view, systems view, and technical standards view) that facilitates integration and promotes interoperability across capabilities and among related integrated architectures.

interoperability - The ability of systems, units, or forces to provide data, information, materiel, and services to and accept the same from other systems, units, or forces and to use the data, information, materiel, and services so exchanged to enable them to operate effectively together. Information technology and National Security Systems interoperability includes both the technical exchange of information and the end-to-end operational effectiveness of that exchanged information as required for mission accomplishment.

joint capability area (JCA) - JCAs are collections of similar capabilities logically grouped to support strategic investment decision making, capability portfolio management, capability delegation, capability analysis (gap, excess, and major trades), and capabilities-based and operational planning. JCAs are intended to

provide a common capabilities language for use across many related DOD activities and processes and are an integral part of the evolving CBP process.

a. Tier 1 JCA. A Tier 1 JCA is a high-level capability category that facilitates capabilities-based planning, major trade analysis, and decision-making. Tier 1 JCAs are comprised of functional, operational, domain, and institutional based joint capabilities. All DOD capabilities can be mapped to a Tier 1 JCA.

b. Tier 2 JCA. A Tier 2 JCA is a comprehensive capability area logically placed within a Tier 1 JCA. Tier 2 JCAs are capability areas with sufficient detail to help identify operationally required military capabilities or to help identify joint force generation and management capabilities. A Tier 2 JCA scopes, bounds, clarifies, and better defines the intended capability area of its 'parent' Tier 1 JCA. Tier 2 JCAs are intended to reduce duplication between Tier 1 JCAs and are not Service, mission, or platform specific.

c. JCA Taxonomy. The structure or framework of joint capabilities, used in conjunction with the JCA Lexicon, to facilitate capabilities-based planning, analysis, and decision making.

d. JCA Lexicon. A collection of joint capability definitions that provide a common capabilities language for the Departement of Defense to facilitate capabilities-based planning, analysis, and decision making.

Joint Capabilities Board (JCB) - The JCB functions to assist the Joint Requirements Oversight Council (JROC) in carrying out its duties and responsibilities. The JCB reviews and, if appropriate, endorses all Joint Capabilities Integration and Development System and joint doctrine, organization, training, materiel, leadership and education, personnel, and facilities change recommendation documents prior to their submission to the JROC. The JCB is chaired by the Joint Staff Director of Force Structure, Resources, and Assessment (J-8). It is comprised of general and flag officer representatives of the Services.

Joint Capabilities Document (JCD) - The JCD identifies a set of capabilities that support a defined mission area utilizing associated Joint Operations Concepts (JOpsC), concept of operations (CONOPs), or Unified Command Plan or other assigned missions. The capabilities are identified by analyzing what is required across all functional areas to accomplish the mission. The gaps or redundancies are then identified by comparing the capability needs to the capabilities provided by existing or planned systems. The JCD will be used as a baseline for one or more functional solution analyses leading to the appropriate initial capabilities documents or doctrine, organization, training, materiel, leadership and education, personnel, and facilities change recommendation documents, but cannot be used for the development of

capability development or capability production documents. The JCD will be updated as changes are made to the supported JOpsC, CONOPs, or assigned missions.

Joint Capability Technology Demonstration (JCTD) - A demonstration of the military utility of a significant new technology and an assessment to clearly establish operational utility and system integrity.

joint doctrine, organization, training, materiel, leadership and education, personnel, and facilities (DOTMLPF) change recommendation – A recommendation for changes to existing joint resources when such changes are not associated with a new defense acquisition program.

a. joint doctrine – Fundamental principles that guide the employment of US military forces in coordinated action toward a common objective. Though neither policy nor strategy, joint doctrine serves to make US policy and strategy effective in the application of US military power. Joint doctrine is based on extant capabilities. Joint doctrine is authoritative guidance and will be followed except when, in the judgment of the commander, exceptional circumstances dictate otherwise. (CJCSI 5120.02)

b. joint organization - A [joint] unit or element with varied functions enabled by a structure through which individuals cooperate systematically to accomplish a common mission and directly provide or support [joint] warfighting capabilities. Subordinate units/elements coordinate with other units/elements and, as a whole, enable the higher-level [joint] unit/element to accomplish its mission. This includes the joint manpower (military, civilian, and contractor support) required to operate, sustain, and reconstitute joint warfighting capabilities.

c. joint training – Training, including mission rehearsals, of individuals, units, and staffs using joint doctrine or joint tactics, techniques, and procedures to prepare joint forces or joint staffs to respond to strategic, operational, or tactical requirements considered necessary by the combatant commanders to execute their assigned or anticipated missions.

d. joint materiel – All items (including ships, tanks, self-propelled weapons, aircraft, etc., and related spares, repair parts, and support equipment, but excluding real property, installations, and utilities) necessary to equip, operate, maintain, and support [joint] military activities without distinction as to its application for administrative or combat purposes.

e. joint leadership and education – Professional development of the joint commander is the product of a learning continuum that comprises training, experience, education, and self-improvement. The role of Professional Military Education and Joint Professional Military Education is to provide the education

needed to complement training, experience, and self-improvement to produce the most professionally competent individual possible.

f. joint personnel – The personnel component primarily ensures that qualified personnel exist to support joint capabilities. This is accomplished through synchronized efforts of joint force commanders and Service components to optimize personnel support to the joint force to ensure success of ongoing peacetime, contingency, and wartime operations.

g. joint facilities – Real property consisting of one or more of the following: a building, a structure, a utility system, pavement, and underlying land. Key facilities are selected command installations and industrial facilities of primary importance to the support of military operations or military production programs. A key facilities list is prepared under the policy direction of the Joint Chiefs of Staff.

joint experimentation - An iterative process for developing and assessing concept-based hypotheses to identify and recommend the best value-added solutions for changes in doctrine, organization, training, materiel, leadership and education, personnel, and facilities and policy required to achieve significant advances in future joint operational capabilities.

joint force - A general term applied to a force composed of significant elements, assigned or attached, of two or more Military Departments operating under a single joint force commander.

joint operating environment – The environment of land, sea, and/or airspace within which a joint force commander employs capabilities to execute assigned missions.

Joint Operations Concepts (JOpsC) – JOpsC is a family of joint future concepts consisting of a Capstone Concept for Joint Operations, Joint Operating Concepts, Joint Functional Concepts, and Joint Integrating Concepts. They are a visualization of future operations and describe how a commander, using military art and science, might employ capabilities necessary to successfully meet challenges 8 to 20 years in the future. Ideally, they will produce military capabilities that render previous ways of warfighting obsolete and may significantly change the measures of success in military operations overall. JOpsC presents a detailed description of "how" future operations may be conducted and provides the conceptual basis for joint experimentation and capabilities-based assessments (CBAs). The outcomes of experimentation and CBA will underpin investment decisions leading to the development of new military capabilities beyond the Future Years Defense Program.

joint potential designator (JPD) - A designation assigned by the Gatekeeper to determine the Joint Capabilities Integration and Development System (JCIDS)

validation and approval process and the potential requirement for certifications/endorsements.

a. "JROC Interest" designation will apply to all acquisition category (ACAT) I/IA programs and ACAT II and below programs where these capabilities have a significant impact on joint warfighting or have a potentially significant impact across Services or interoperability in allied and coalition operations. All joint capabilities documents and joint doctrine, organization, training, materiel, leadership and education, personnel, and facilities change recommendation documents (DCRs) will be designated JROC Interest. This designation may also apply to intelligence capabilities that support DOD and national intelligence requirements. These documents will receive all applicable certifications, including a weapon safety endorsement when appropriate, and be staffed through the JROC for validation and approval. An exception may be made for ACAT IAM programs without significant impact on joint warfighting (i.e., business oriented systems). These programs may be designated either Joint Integration, Joint Information, or Independent.

b. "Joint Integration" designation will apply to ACAT II and below programs where the capabilities and/or systems associated with the document do not significantly affect the joint force and an expanded review is not required. Staffing is required for applicable certifications (information technology and National Security Systems (NSS) interoperability and supportability and/or intelligence), and for a weapon safety endorsement, when appropriate. Once the required certification(s)/weapon safety endorsement are completed, the document may be reviewed by the FCB. Joint Integration documents are validated and approved by the sponsoring component.

c. "Joint Information" designation applies to ACAT II and below programs that have interest or potential impact across Services or agencies but do not have significant impact on the joint force and do not reach the threshold for JROC Interest. No certifications or endorsements are required. Once designated Joint Information, staffing is required for informational purposes only and the FCB may review the document. Joint Information documents are validated and approved by the sponsoring component.

d. "Independent" designation will apply to ACAT II and below programs where the capabilities and/or systems associated with the document do not significantly affect the joint force, an expanded review is not required, and no certifications or endorsements are required. Once designated Independent, the FCB may review the document. Independent documents are validated and approved by the sponsoring component.

<u>Joint Requirements Oversight Council memorandum (JROCM)</u> - Official JROC correspondence generally directed to an audience(s) external to the JROC. JROCMs are usually decisional in nature.

joint urgent operational need (JUON) – An urgent operational need identified by a combatant commander involved in an ongoing named operation. A JUON's main purpose is to identify and subsequently gain Joint Staff validation and resourcing solution, usually within days or weeks, to meet a specific high-priority combatant commander need. The scope of a combatant commander JUON will be limited to addressing urgent operational needs that: (1) fall outside of the established Service processes; and (2) most importantly, if not addresses immediately, will seriously endanger personnel or pose a major threat to ongoing operations. They should not involve the development of a new technology or capability; however, the acceleration of a Joint Capability Technology Demonstration/Advanced Concept Technology Demonstration or minor modification of an existing system to adapt to a new or similar mission is within the scope of the JUON validation and resourcing process.

Joint Weapon Safety Technical Advisory Panel (JWSTAP) – The JWSTAP provides subject matter expertise review and constructive comments to the Deputy Director for Force Protection (DDFP) regarding the safe employment, storage, and transport of munitions and weapons in joint operating environments. Pre-existing requirement or capability documents are not within the scope of the JWSTAP. The JWSTAP review is focused on the capability attributes and metrics of a given weapon to identify potential safety issues resulting from interaction between the proposed weapon and other capabilities existing within the same joint operating environment. Safety concerns identified by the JWSTAP are presented to the DDFP with recommended revisions to the capability document to reduce or eliminate the identified safety concern while maintaining the desired operational effectiveness.

key decision point (KDP) – Major decision points that separate the phases of a DOD space program.

key performance parameters (KPP) - Those attributes or characteristics of a system that are considered critical or essential to the development of an effective military capability and those attributes that make a significant contribution to the characteristics of the future joint force as defined in the Capstone Concept for Joint Operations. KPPs must be testable to enable feedback from test and evaluation efforts to the requirements process. KPPs are validated by the Joint Requirement Oversight Council (JROC) for JROC Interest documents, and by the DOD component for Joint Integration, Joint Information, or Independent documents. Capability development and capability production document KPPs are included verbatim in the acquisition program baseline.

key system attribute (KSA) – An attribute or characteristic considered crucial in support of achieving a balanced solution/approach to a key performance parameter (KPP) or some other key performance attribute deemed necessary by the sponsor. KSAs provide decision makers with an additional level of

capability performance characteristics below the KPP level and require a sponsor 4-star , Defense agency commander, or Principal Staff Assistant to change.

logistic support - Logistic support encompasses the logistic services, materiel, and transportation required to support the continental United States-based and worldwide-deployed forces.

materiel solution - Correction of a deficiency, satisfaction of a capability gap, or incorporation of new technology that results in the development, acquisition, procurement, or fielding of a new item (including ships, tanks, self-propelled weapons, aircraft, etc., and related software, spares, repair parts, and support equipment, but excluding real property, installations, and utilities) necessary to equip, operate, maintain, and support military activities without disruption as to its application for administrative or combat purposes. In the case of family of systems and system of systems approaches, an individual materiel solution may not fully satisfy a necessary capability gap on its own.

measures of effectiveness - Measures designed to correspond to accomplishment of mission objectives and achievement of desired effects.

milestones - Major decision points that separate the phases of an acquisition program.

milestone decision authority (MDA) - The individual designated, in accordance with criteria established by the Under Secretary of Defense for Acquisition, Technology and Logistics, the Assistant Secretary of Defense (Networks and Information Integration) (for Automated Information System acquisition programs) or by the Under Secretary of the Air Force (as the DOD Space MDA) to approve entry of an acquisition program into the next phase.

Military Department - One of the departments within the Department of Defense created by the National Security Act of 1947, as amended.

militarily useful capability - A capability that achieves military objectives through operational effectiveness, suitability, and availability, which is interoperable with related systems and processes, transportable, and sustainable when and where needed, and at costs known to be affordable over the long term.

Mission Requirements Board (MRB) - The MRB manages the national requirements process that reviews, validates, and approves national requirements for future intelligence capabilities and systems. It is the senior validation and approval authority for future intelligence requirements funded within the National Foreign Intelligence Program and provides advice and council on future requirements funded outside that body.

most pressing military issues (MPMI) - The Joint Requirements Oversight Council (JROC) approved list of most pressing military issues (MPMI) that will be used to provide the JROC's priority guidance on solving select combatant command and Department issues. The MPMI is intended to be used as a focusing construct for those issues that come before the JROC.

National Security Systems - Telecommunications and information systems operated by the Department of Defense, the functions, operation or use of which involves (1) intelligence activities; (2) cryptologic activities related to national security; (3) the command and control of military forces; (4) equipment that is an integral part of a weapon or weapons systems; or (5) is critical to the direct fulfillment of military or intelligence missions. Subsection (5) in the preceding sentence does not include procurement of automatic data processing equipment or services to be used for routine administrative and business applications (including payroll, finance, logistics, and personnel management applications).

net-centric - Relating to or representing the attributes of a net-centric environment. A net-centric environment is a robust, globally interconnected network environment (including infrastructure, systems, processes, and people) in which data is shared timely and seamlessly among users, applications, and platforms. A net-centric environment enables substantially improved military situational awareness and significantly shortened decision-making cycles.

net-ready key performance parameter (NR-KPP) - The NR-KPP assesses information needs, information timeliness, information assurance, and net-ready attributes required for both the technical exchange of information and the end-to-end operational effectiveness of that exchange. The NR-KPP consists of measurable and testable characteristics and/or performance metrics required for timely, accurate, and complete exchange and use of information to satisfy information needs for a given capability. The NR-KPP is comprised of the following elements:

a. Compliance with the Net-Centric Operations and Warfare Reference Model.

b. Compliance with applicable Global Information Grid key interface profiles.

c. Verification of compliance with DOD information assurance requirements.

d. Supporting integrated architecture products required to assess information exchange and use for a given capability.

non-developmental item - Any previously developed item used exclusively for governmental purposes by a federal agency, a state or local government, or a foreign government with which the United States has a mutual defense cooperation agreement.

non-materiel solution - Changes in doctrine, organization, training, materiel, leadership and education, personnel, facilities, or policy (including all human systems integration domains) to satisfy identified functional capabilities. The materiel portion is restricted to commercial or non-developmental items, which may be purchased commercially, or by purchasing more systems from an existing materiel program.

objective value - The desired operational goal associated with a performance attribute beyond which any gain in utility does not warrant additional expenditure. The objective value is an operationally significant increment above the threshold. An objective value may be the same as the threshold when an operationally significant increment above the threshold is not significant or useful.

occupational health - Activities directed toward anticipation, recognition, evaluation, and control of potential occupational and environmental health hazards; preventing injuries and illness of personnel during operations; and accomplishment of mission at acceptable levels of risk.

operational effectiveness - Measure of the overall ability to accomplish a mission when used by representative personnel in the environment planned or expected for operational employment of the system considering organization, doctrine, supportability, survivability, vulnerability, and threat.

operational suitability - The degree to which a system can be placed and sustained satisfactorily in field use with consideration given to availability, compatibility, transportability, interoperability, reliability, wartime usage rates, maintainability, environmental, safety and occupational health, human factors, habitability, manpower, logistics, supportability, logistics supportability, natural environment effects and impacts, documentation, and training requirements.

operator - An operational command or agency that employs the acquired system for the benefit of users. Operators may also be users.

qualified prototype project – A unique materiel system developed for demonstration under field conditions to confirm adequacy as a solution for a validated mission gap. To be a qualified project, a prototype must have Joint Capabilities Integration and Development System validation of mission gap and include an independent military utility assessment and/or final report including those relevant elements of an initial capabilities document.

quick reaction technology project – A research project transitioning products directly into demonstrations under field conditions and intended for immediate warfighting end users. To be a qualified project, a prototype must have Joint Capabilities Integration and Development System validation of mission gap and include an independent military utility assessment and/or final report including those relevant elements of an initial capabilities document.

safety - The programs, risk management activities, and organizational and cultural values dedicated to preventing injuries and accidental loss of human and materiel resources, and to protecting the environment from the damaging effects of DOD mishaps.

Senior Warfighter Forum (SWarF) – The SWarF is a mechanism by which a combatant commander can engage with his senior warfighting counterparts to identify the issues and capabilities associated with a particular mission or function of one or more combatant commands. The scope of a SWarF is defined by the combatant commander leading the effort. The results of the SWarF may be used to support the development of a joint capabilities document to identify joint warfighting capabilities and gaps in those capabilities.

sponsor - The DOD component, principal staff assistant, or domain owner responsible for all common documentation, periodic reporting, and funding actions required to support the capabilities development and acquisition process for a specific capability proposal. The only exception is for the sponsor of a joint capabilities document (JCD). A combatant command or Functional Capabilities Board may be the sponsor for the JCD. In this usage, the responsibilities of the sponsor are limited to performing the capabilities-based assessment and developing the JCD for Joint Requirements Oversight Council validation and approval.

supportability – A key component of system availability. It includes design, technical support data, and maintenance procedures to facilitate detection, isolation, and timely repair and/or replacement of system anomalies. This includes factors such as diagnostics, prognostics, real-time maintenance data collection, and human systems integration considerations.

sustainability - The ability to maintain the necessary level and duration of operational activity to achieve military objectives. Sustainability is a function of providing for and maintaining those levels of ready forces, infrastructure assets, materiel, and consumables necessary to support military effort.

sustainment - The provision of personnel, training, logistic, environment, safety and occupational health management, and other support required to maintain and prolong operations or combat until successful accomplishment or revision of the mission or of the national objective.

system of systems (SoS) - A set or arrangement of interdependent systems that are related or connected to provide a given capability. The loss of any part of the system could significantly degrade the performance or capabilities of the whole. The development of an SoS solution will involve trade space between the systems as well as within an individual system performance.

system training – All training methodologies (embedded, institutional, Mobile Training Team, computer, and Web based) that can be used to train and educate operator and maintainer personnel in the proper technical employment and repair of the equipment and components of a system, and to educate and train the commanders and staffs in the doctrinal tactics, techniques, and procedures for employing the system in operations and missions.

threshold value - A minimum acceptable operational value below which the utility of the system becomes questionable.

user - An operational command or agency that receives or will receive benefit from the acquired system. Combatant commanders and their Service component commands and Defense agencies are the users. There may be more than one user for a system. Because the Service component commands are required to organize, equip, and train forces for the combatant commanders, they are seen as users for systems. The Chiefs of the Services and heads of other DOD components are validation and approval authorities and are not viewed as users.

user representative - A command or agency that has been formally designated to represent single or multiple users in the capabilities and acquisition process. The Services and the Service components of the combatant commanders are normally the user representatives. There should only be one user representative for a system.

validation - The review of documentation by an operational authority other than the user to confirm the operational capability. Validation is a precursor to approval.

validation authority - The individual within the DOD components charged with overall capability definition and validation. In the role as Chairman of the Joint Requirements Oversight Council (JROC), the Vice Chairman of the Joint Chiefs of Staff is the validation authority for all potential major defense acquisition programs. The validation authority for Joint Capabilities Integration and Development System documents is dependent upon the joint potential designator of the program or initiative as specified below:

a. JROC Interest – JROC or as delegated.

b. Joint Integration - Sponsor

c. Joint Information - Sponsor

d. Independent – Sponsor

weapon – Military munitions, directed energy weapons, electromagnetic rail guns, together with firing, launching, and controlling systems including safety critical software. Nuclear weapons and their components, small arms and associate ammunition (.50 caliber or 8 gauge or smaller); intercontinental ballistic missiles, space launch vehicles, and the non-weapon related aspects of vehicles or platforms from which military munitions or directed energy weapons are fired or launched are excluded.

weapon safety endorsement – Endorsement is the means for documenting, in support of the JCIDS process, the extent to which weapon capabilities documents provide for safe integration into joint operating environments. Endorsement recommendations will be prepared by the Joint Weapon Safety Technical Advisory Panel and submitted to the J-8/Deputy Director for Force Protection for appropriate staffing and endorsement by the Force Protection Functional Capability Board.

THE UNDER SECRETARY OF DEFENSE
3010 DEFENSE PENTAGON
WASHINGTON, DC 20301-3010

ACQUISITION,
TECHNOLOGY
AND LOGISTICS

MAR 1 9 2007

MEMORANDUM FOR SECRETARIES OF THE MILTARY DEPARTMENTS
CHAIRMAN OF THE JOINT CHIEFS OF STAFF
COMMANDER, U.S. SPECIAL OPERATIONS COMMAND
DIRECTOR, MISSILE DEFENSE AGENCY

SUBJECT: Insensitive Munitions Strategic Planning

This memorandum modifies the Department of Defense policy for the submission of Insensitive Munitions (IM) Strategic Plans to the Joint Requirements Oversight Council (JROC) and the Office of the Under Secretary of Defense (Acquisition, Technology, and Logistics) (OUSD(AT&L)). IM Strategic Plans will be required biennially beginning with the FY2009/2010 plans. The submission date for the first biennial plan is February 15, 2008. The JROC approval of the FY2007 IM Strategic Plans covers all identified procurement of non-IM compliant munitions through FY2008. Attached is additional guidance for the February 2008 submission—it will improve the quality of the strategic plans and make the review more efficient and effective.

IM Strategic Planning has provided the JROC and OUSD(AT&L) with a comprehensive view of the IM posture of the Department's total munitions portfolio and the IM investment strategies of the Services' Program Executive Officers (PEOs). The knowledge gained through the strategic planning process will assist the Director, Defense Research and Engineering, and other Science and Technology planners, in closing the technology gaps identified by PEOs and users.

The OSD point of contact is Mr. Tony Melita (703-695-1382). The JROC point of contact is: Division Chief, J8 Capabilities and Acquisition Division (703-614-3682).

Kenneth J. Krieg

Attachments:
As stated

cc:
Director, Defense Research and Engineering

INSENSITIVE MUNITIONS STRATEGIC PLANS

Key Elements

Each Strategic Plan should include as a minimum:

- An executive summary that discusses the plan's key points and the methodology used in the development and decision process.

- A complete list of all munitions (e.g. legacy, developmental, in production, awaiting production, Advanced Technology Demonstration (ATD), Foreign Comparative Test (FCT), current inventory) for which that PEO has acquisition and lifecycle responsibility

- For each munition:
    - Munition characteristics including nomenclature, Mark and/or Mod, Net Explosive Weight, and energetic fills of each relevant component.
    - RDT&E and procurement profile (funding and quantity across the Future Years Defense Plan (FYDP))
    - Baseline IM performance (known or predicted) for the IM threats per MIL-STD-2105C and the hazard classification (HC) assigned (interim or final)
    - Ongoing and planned technology integration efforts aimed at IM improvement and HC reduction and the funding supporting such efforts, and
    - New technologies required for achieving full IM compliance and the schedule for technology maturity

- Munition system IM investment priorities and prioritization criteria

- Funded Service-specific and Joint investments to demonstrate and integrate new IM technologies

- All unfunded IM requirements

Definitions.

Term	Definition/ Clarification
ACTD	Advanced Concept Technology Demonstration
ATD	Advanced Technology Demonstration/Development
Baseline IM Reaction	The initial IM reaction or assessment assigned to a munition for the particular IMSP cycle
CM	Configuration Manager - The activity which retains responsibility for the Technical Data Package and which is directly responsible for the configuration management of a munition or item containing energetic material
Developmental Item	Includes any new munition or item containing energetic material, without regard to ACAT level, or source of manufacture, prior to MS C. These shall be evaluated as priority items (categorized as either Tier I or II items).
Energetic Material	Explosive, propellant, or pyrotechnic material per DoD 5000.1
Exempt Munitions	Any munition/item that was on contract or produced prior to 26 January 1999, as established by the criteria of the Gansler Memorandum, and for which there has been no further procurement actions and/or PIP
Funded IM Requirement	Refers to investments for IM characterization and/or improvements
IM Compliant	Passes all IM Tests as specified by a Service/Agency THA. Tests shall be scored or assessed by the appropriate Service/Agency IM Board or Council.
IM-Certified	An IM-compliant item that has been certified by the appropriate authority.
IM Investment	Refers to investments required to achieve IM-compliance, to include S&T, technology insertion, evaluation and qualification.
IM Waivers	An approved deviation from the requirement for munitions containing energetic materials to be IM compliant issued by the JROC.
Intermediate IM Reactions	The IM reaction that is expected as a result of a planned technology insertion effort
Legacy Munition	Legacy munitions are all items in the inventory that are either in procurement or expected to be procured.
OPR	Office of Primary Responsibility infers that the respective PEO has direct oversight responsibilities
Out of Cycle Munition Reviews	Munitions requiring review not included in the current IMSP that requires immediate procurement prior to the next IMSP cycle.
PIP	Product Improvement Program
POA&M	Plan of Action and Milestones

Priority Munition	Shall include all munitions and/or items containing energetic material as determined by the PEO to benefit from IM-improvement, based upon the prioritization criteria contained within the IMSP, All developmental items shall be categorized as Priority Items.
P3I	Preplanned Product Improvement
SDD	System Development and Demonstration
SLEP	Service Life Extension Program
Tier I Munitions	Non IM-compliant priority items that have fully funded POA&Ms.
Tier II Munitions	Non IM-compliant priority items that do not have fully funded POA&Ms.
Tier III Munitions	Non IM-compliant , non-priority items that are being procured by another PEO, such as SMCA as the OPR, in which that activity has retained configuration management authority.
Tier IV Munitions	Non IM-compliant , non-priority items that are or expected to be procured by the reporting PEO.
Tier V Munitions	Non-priority items with no further procurement and no window of opportunity anticipated.
Tier VI Munitions	IM-compliant, non-priority items that are being procured by another PEO, such as SMCA as the OPR, in which that activity has retained configuration management authority (IM-compliant equivalent of Tier III).
Tier VII Munitions	IM-compliant , non-priority items that are or expected to be procured by the reporting PEO (IM-compliant equivalent of Tier IV).
UFR	Unfunded Requirement - The aggregate of funding required, and unavailable, to develop and integrate technology, to include retrofitting, to obtain IM compliance
Window of Opportunity	Potential windows of opportunity include: new contract award, exercise of contract options, PIP, P3I, SLEP, maintenance, and spiral development efforts

Issues	Business Rule
Inconsistency with JROCMs (i.e., waiver duration and specific quantity) and PEOs' interpretation of previous JROCMs for IM waivers and actions required.	Rolling IM Waivers ▪ Previously issued IM waivers will be included in the IMSP. ▪ All Programs' IM efforts will be reviewed and addressed with each IMSP submission.
Inconsistency with the reporting of shaped charge jet (SCJ) testing.	▪ Service PEOs shall assess THA to include assessment of SCJ. ▪ If SCJ threat is not applicable to the munition, the Service PEO should provide justification.
Lack of reporting on multi-Service acquisition and procurement munitions.	▪ The PEO with Configuration Manager authority and the designated Service Acquisition PEO is responsible for addressing the item in each of their respective PEO IMSPs. ▪ The CM of a munition item is responsible for addressing the IM solution regardless if they are buying the round or not.
IMSP submissions did not clearly express action plan for Unfunded Requirements (UFR).	▪ IMSP submissions require PEOs to identify a strategy for addressing UFRs.
Inconsistency of reporting IM investment.	▪ Service PEOs will itemize specific IM investments; separating the cost of technology insertion from IM testing and evaluation to include cost associated with requalification and integration requirements
Reporting for Developmental items is inconsistent across all Service PEOs.	▪ All Service PEOs will address developmental items in their respective IMSP. ▪ A POA&M addressing the IM strategy for all developmental munitions is required. ▪ If the Service PEO is not addressing IM; justification as to why, is required in the IMSP submission.
Inconsistency between PEO IMSP (lack of detail; assumptions not fully described; methodology for drawing the priority line not always described).	▪ Service PEOs will adhere to the terms of reference (i.e., business rules, definitions, IM reactions, tables and executive summary templates) as directed by the FP FCB.

Plan of Action and Milestones (POA&M) Format

Note: POA&Ms, while an integral part of the PEO IMSP, must nevertheless be prepared with sufficient detail to withstand review on their individual merit alone as was the case prior to the IMSP process. As a result of this policy decision, redundancies between the IMSP and individual POA&Ms are expected. POA&Ms are required for **all Priority (Tier I and II, and all developmental)** items.

EXECUTIVE SUMMARY
Address the status of the program, applicable dates (decision and testing), IM approach, what programs are being leveraged, anticipated successes and shortfalls. Include a summary quad chart (discussed in Section 6 of the IMSP Outline).

1. INTRODUCTION
1.1 Purpose
1.2 Background
1.3 Scope of Work
1.3.1 Program Status

2. PROGRAM MANAGEMENT
2.1 Organization
2.2 IM Point of Contact

3. SYSTEM DESCRIPTION
3.1 Complete Description (include variants)
3.2 Complete list of Energetic Material (Table)
3.3 Functional Description
3.4 Component List & Description

4. THREAT HAZARD ASSESSMENT SUMMARY
4.1 Projected Threat Environment
4.2 Summary of Planned Logistical and Tactical Life-Cycle Profile
4.3 Recommended Tests

5. IM TEST RESULTS
5.1 IM Test Conditions Summary
5.2 Test Result Summary
5.3 Summary of Service Insensitive Munitions Board Recommendations

6. IM TECHNICAL APPROACH
6.1 Previous IM efforts (Challenges & Progress vs. Previously approved POA&M)
6.2 Future IM Efforts (Funded vs. Unfunded)
6.3 Technology Requirements
7. SCHEDULE

7.1 Milestone/Program Status (to include: IM Improvement Schedule and Projected Insertion Opportunities)

8. FUNDING ACROSS THE FYDP

8.1 Insensitive Munitions (Development, Integration, Testing, Qualification) and Procurement Funding

8.2 Unfunded Requirements

9. BUYS / PROCUREMENTS

9.1 Procurement Quantities

10. IMPACT

10.1 Consequence of Reaction

10.2 Operational Benefits and/or Limitations

10.3 Logistical Benefits and/or Limitations

10.4 Cost Benefits or Penalties

PEO ABC MUNITIONS PORTFOLIO			
Munitions	Response	Notes	
		Paragraph	Appendix
Items in Portfolio	XXX	5.3	B
Planned Items in Procurement Across FYDP	XXX	5.4	B
Items in Procurement for Current Period	XXX	5.5	B
Items in Development	XX	5.6	B
Items IM-Compliant (how many items total)	XXX	5.7	B
Items with JROC–Approved Waivers	XXX	5.8	A - Refs (h), (n)
Items Obtaining IM Compliance This Period (from this year to the previous year)	XX	5.9	A - Refs (j), (k), (l)
Items with Incremental IM Improvements	X	5.10	
Items Requiring an IM Waiver	XXX	5.11	B
Tier I Munitions (Priority) Funded	XX	5.12	B, F
Tier II Munitions (Priority) Not Fully Funded	X	5.13	B
Tier III Munitions (SMCA or Other Service Procured)	XXX	5.14	B
Tier IV Munitions (Legacy)	X	5.15	B
Tier V Munitions (Exempt)	X	5.16	B
Tier VI Munitions (IM compliant, other PEO/Agency is buying)	XXX	5.17	B
Tier VII Munitions (IM compliant, PM is buying)	XX	5.18	B
Total Obligation Authority (TOA) (Munitions Only) PEO R&D and Procurement	$0	5.19	B
Funded IM Investment ($M)	$0	5.20	
Unfunded IM Investment ($M)	$0	5.21	
Joint IM Investments (Multi-Service Organization)	$0	5.22	
Notes:			

IM Reactions

1. In an effort to clearly articulate to senior leadership the payoff from the IM investment that DoD is making in priority munitions programs, it is recommended that PEOs generate a common table that shows how the IM response of specific munitions will mature and when the munitions will be available for production or procurement. The template provided at Table 1 is required to be submitted for Priority munitions. The table incorporates a stoplight matrix for all munitions in the portfolio that addresses Baseline/Current Status of IM performance (known or predicted for the IM threats per MIL-STD 2105C and the hazard classification (HC) assigned (interim or final). In addition, the activity that scored the IM reactions must be identified. The stoplight matrix also includes intermediate (Future) reactions that address the reaction that is anticipated to be achieved based on current technology advancement and includes the year that the IM improvement is expected to be available. The available (Avail) column is intended to identify when the emerging technology is expected to be mature for insertion.

IM Maturation Based on Funded PEO Tier I Programs																		
Baseline IM Response								Projected IM Response										
Baseline Munition	FCO	SCO	BI	FI	SD	SCJ	H-C	POA&M Munition Program	FCO	SCO	BI	FI	SD	SCJ	Proj. H-C	FY	Total Remaining IM Investment ($M)
Munition XYZ Example	IV	II	III	IV	F	(P)	1.1		V	(VI)	(V)	(V)	(P)	(P)	(1.2.3)	10	$17.65
	IV	II	III	IV	P	(P)	1.1		(IV)	(IV)	(IV)	(IV)	(P)	(P)	(1.2.1)	10	$6.50
	IV	II	III	III	(P)	(F)	1.1		(IV)	(III)	(IV)	(IV)	(P)	(F)	1.1	15	$0.75

DEFINITIONS

Baseline IM Response : The IM response of the munition at the start of the POA&M. In some cases this will be the response of a munition being replaced by a muntion being addressed in the POA&M. For a developmental item this could be either a munition being replaced, or upgraded, or the baseline could be not applicable (N/A) or TBD if this munition is providing a new capability and will not be eliminating another munition from procurement. The latter would apply if based on test or assessment or if a preliminary developmental munition design yielded a baseline IM response. Baseline responses for any munition can be assessed, but assessed values should be replaced if actual IM test results become available during execution of the POA&M.

Projected IM Response: The IM response of the munition at the completion of the POA&M. Relative to the baseline, this will show the incremental improvement of the munition response that is to be gained by the investment in the POA&M.

FY: The Fiscal Year when a munition with the projected IM response could potentially be procured for use.

Total Remaining IM Investment ($M): The total IM imvestment remaining across the POA&M. For a Tier I munition, the POA&M should be fully funded and at the end of the POA&M, the munition should be in a state that it would be qualified and could be procured and used. This should only include those costs that are actually incurred by IM; for example, if a munition is being modfied or qualified for purposes other than IM, those costs need not be addressed, although costs for IM qualification should always be included.

Table 1 – IM Maturation Based on Funded Tier I Programs

2. Table 2 reflects a legend that is to be used for the reporting of all IM reactions:

		Score		IM Test							Score		
Reaction	Response	Tested	Assessed	FCO	SCO	BI	FI		SD	SCJ	Tested	Assessed	Reaction
Type VI	No Reaction	VI	(VI)	Fast Cook Off	Slow Cook Off	Bullet Impact	Fragement Impact		Sympathetic Detonation	Shaped Charge Jet	P	(P)	Type VI
Type V	Burn	V	(V)										Type V
Type IV	Deflagration	IV	(IV)										Type IV
Type III	Explosion	III	(III)										Type III
Type II	Partial Detonation	II	(II)								F	(F)	Type II
Type I	Detonation	I	(I)										Type I

Table 2 – IM Response Reporting Legend

For clarification, the reactions listed in Table 2 are the only entries permitted, i.e., Roman Numerals for FCO, SCO, BI, and FI tests, “P” or “F” for SD and SCJ tests, parenthetical notation when reaction type is assessed, proper color coding. Do not enter the title of the reaction, or an abbreviation thereof, i.e., Type IV – Deflagration, or Defl., or create new colors to suit individual needs. Where a reaction type is projected to cross two different types, use the following example as guidance: IV/V; yellow transitioning to green may be used for the color coding. This is the only deviation to the protocol that will be permitted.

Funding

1. Template for reporting IM funding/Investments:

Tier I Munitions Insensitive Munitions (IM) and Investment Funding ($K)							
Funding	FY07	FY08	FY09	FY10	FY11	FY12	FY13
Munition/Special Interest Programs							
Total							

2. Template for reporting unfunded requirements

Tier II Munitions Insensitive Munitions (IM) and Investment Funding ($K)							
Funding	FY07	FY08	FY09	FY10	FY11	FY12	FY13
Munition/Special Interest Programs							
Total							

3. Template for accessing the cost and impact of IM investment Funding and Associated Cost by Munition Program

Munition Program - (Reported By Munition) IM Investment Funding and Associated Cost							
Associated Funding Requirements	FY07	FY08	FY09	FY10	FY11	FY12	FY13
"Include additional funding streams as appropriate"							
Hardware (Assets)							
Technology Development							
Engineering Assessment							
Qualification Testing							
Requalification Testing							
Total							

Attachment

THE JOINT STAFF
WASHINGTON, D.C. 20318-8000

JOINT REQUIREMENTS OVERSIGHT COUNCIL

JROCM 235-06
6 November 2006

MEMORANDUM FOR: Under Secretary of Defense for Acquisition, Technology and Logistics
Vice Chief of Staff, US Army
Vice Chief of Naval Operations
Vice Chief of Staff, US Air Force
Assistant Commandant of the Marine Corps

Subject: Insensitive Munitions Standards and Passing Criteria

1. The Joint Requirements Oversight Council (JROC) received and concurred with the OSD(AT&L) briefing, as requested in JROC Memorandum 076-06, detailing a proposed standardized single set of insensitive munitions tests and passing criteria required for insensitive munitions compliance executed by all Services. Services are expected to develop future Insensitive Munitions Strategic Plan submissions based upon the results of the revised standard insensitive munitions tests. This directive applies immediately to insensitive munitions testing and should be reflected in the FY 2009 Strategic Plan submission.

2. The Services will support and fund the proposed $119M Insensitive Munitions Science and Technology enhancement across the FYDP per Service Programmers' funding share agreement.

E. P. GIAMBASTIANI
Admiral, US Navy
Vice Chairman
of the Joint Chiefs of Staff

Copy to:
Under Secretary of Defense (Comptroller)/Chief Financial Officer
Director, Program Analysis and Evaluation

METRIC

MIL-STD-2105C
14 July 2003
SUPERSEDING
MIL-STD-2105B
12 January 1994

DEPARTMENT OF DEFENSE
TEST METHOD STANDARD

HAZARD ASSESSMENT TESTS FOR NON-NUCLEAR MUNITIONS

AMSC N6037 AREA SAFT

DISTRIBUTION STATEMENT A: Approved for public release; distribution is unlimited.

FOREWORD

1. This military standard is approved for use by all Departments and Agencies of the Department of Defense.

2. Address any beneficial comments (recommendations, additions, deletions) and any pertinent data that may be of use in improving this document to: Commander, Indian Head Division, Naval Surface Warfare Center, Standardization Branch (Code 8420), Indian Head, MD 20640-5035, by using the Standardization Document Improvement Proposal (DD Form 1426) appearing at the end of this document or by letter.

3. This document contains a description of tests or references to NATO Standardization Agreements (STANAG's) for the assessment of munition safety and insensitive munitions (IM) characteristics of non-nuclear munitions. Historically, this standard was used primarily for the assessment of explosive safety. The standard was later revised to add additional IM tests as called out by the Joint Service Requirement for Insensitive Munitions (JSRIM),and now by various NATO STANAG's. This revision makes a distinction between explosive safety tests and the IM tests, even though these tests may often be contained in the same system hazard assessment test program.

4. Three sets of tests are commonly used to assess munitions with respect to hazards: IM tests as contained or contained in this standard; hazard classification tests used to classify munitions for transportation and storage purposes; and system specific tests used to assess munition safety and suitability response or system vulnerability. In order to best utilize limited resources and avoid test redundancy, tailor IM test plans to the maximum extent possible, so that all three sets of tests can be addressed in one coordinated test program with the minimum number of samples. It is recommended that test plans be coordinated with the appropriate service hazard classifier and the Department of Defense Explosives Safety Board (DDESB), 2461 Eisenhower Avenue, Alexandria, VA 22331-0600, when a DOD hazard classification for an item is to be obtained in accordance with TB 700-2[1].

5. Additional or modified hazard testing may be required to fully assess the tactical and logistical vulnerability of the given weapon system against the probable threats to which the system may be subjected. Accordingly, project managers and munition developers will conduct a threat hazard assessment to determine the adequacy of IM

[1] TB 700-2, "Department of Defense Ammunition and Explosives Hazard Classification Procedures," is also known as NAVSEAINST 8020.8, TO 11A-1-47, and DLAR 8220.1.

tests as referenced or specified in this standard. If the assessment indicates that different environmental hazards or threats to the weapon system pose additional vulnerability problems, tailor the tests to meet those requirements and provide rationale to support the assessment.

6. Program managers are responsible for planning and executing a hazard assessment test program. The hazard assessment test program includes a test plan based on a realistic life cycle environmental profile. Program managers should establish safety design goals for the test plan and have these goals approved by the service review organization within the applicable department. Program managers should generate a test report for submission to their service review organization.

7. The service review organization should review the test plan and test report and examine the results of the hazard assessment test program to ensure that safety and insensitive munitions requirements are met. The service review organization should produce a final recommendation for or against service use of the weapon system. For joint programs, all affected service review organizations should conduct this review and examination and develop a final recommendation.

CONTENTS

PARAGRAPH		PAGE
1.	**SCOPE**	1
1.1	Scope	1
1.2	Purpose	1
1.3	Application	1
2.	**APPLICABLE DOCUMENTS**	2
3.	**DEFINITIONS**	6
4.	**GENERAL REQUIREMENTS**	9
4.1	General	9
4.1.1	Test plan	9
4.1.2	Environmental profile	9
4.1.3	Threat hazard assessment (THA).	9
4.2	Test parameters	9
4.2.1	Test item temperature	9
4.3	Passing criteria	9
4.4	Hazard assessment test report	10
4.5	Hardware	10
4.6	Test facilities	10
4.6.1	Witness plates	11
4.7	Configuration	11
4.8	Pre-test examination	11
4.9	Post-test requirements	11
4.10	Photographic requirements	12
5.	**DETAILED REQUIREMENTS**	13
5.1	Basic safety tests	13
5.1.1	28-day temperature and humidity (T&H) test	13
5.1.2	Vibration test	14
5.1.3	4-day temperature and humidity (T&H) test	15
5.1.4	12-meter (40-foot) drop test	16
5.2	Insensitive Munitions (IM) tests	16
5.2.1	Fast cook-off test	16

5.2.2 Slow cook-off test 16
5.2.3 Bullet impact test 16
5.2.4 Fragment impact test 18
5.2.5 Sympathetic Detonation…… 18
5.2.6 Shaped charge jet impact test 18
5.2.7 Spall impact test 18

5.3 Additional tests 21

6. **NOTES** 23

6.1 Intended use 23
6.2 Issue of DODISS 23
6.3 Data requirements 23
6.4 Tailoring guidance 24
6.5 Submission of test reports and results 24
6.6 Service review organizations 24
6.7 Tests for hazard classification 25
6.8 Units of measurement and abbreviations 25
6.9 Subject term (key word) listing 26
6.10 International standardization agreements 26
6.11 Changes from previous issue 26

FIGURES

FIGURE 1. "Typical" item number and test sequence 10
FIGURE 2. "Typical" bullet impact test setup 17
FIGURE 3. "Typical" fragment impact test setup 19
FIGURE 4. "Typical" spall impact test configuration 20

1. SCOPE

1.1 Scope. This standard provides or references tests and test procedures for the assessment of safety and insensitive munitions (IM) characteristics for all non-nuclear munitions, munition subsystems and explosive devices.

1.2 Purpose. The purpose is to provide a framework for the development of a consolidated safety and IM assessment test program for non-nuclear munitions. The tests are to characterize the munitions and provide the service review organization information with which to make a decision.

1.3 Application. This standard applies to all non-nuclear munitions (i.e., all-up missiles, rockets, pyrotechnics), and munitions subsystems (e.g., warheads, fuzes, cartridge actuated devices, propulsion units, safe and arm devices, pyrotechnic devices, chemical payloads), and other explosive devices. In all likelihood, it may not be possible to test against all threats. In this case, select the most probable, credible stimuli that is expected to cause the greatest damage to life, property, or combat effectiveness.

2. APPLICABLE DOCUMENTS

2.1 General. The documents listed in this section are specified in sections 3 and 4 of this standard. This section does not include documents cited in other sections of this standard or recommended for additional information or as examples. While every effort has been made to ensure the completeness of this list, document users are cautioned that they must meet all specified requirements documents specified in sections 3 and 4 of this standard, whether or not they are listed.

2.2 Government documents.

2.2.1 Specifications, standards and handbooks. The following specifications, standards, and handbooks form a part of this document to the extent specified herein. Unless otherwise specified, the issues of these documents are those listed in the issue of the Department of Defense Index of Specifications and Standards (DODISS) and supplements thereto, cited in the solicitation (See 6.2).

STANDARDS

DEPARTMENT OF DEFENSE

MIL-STD-167/1	Mechanical Vibrations of Shipboard Equipment (Type I - Environmental and Type II – Internally Excited)
MIL-STD-167/2	Mechanical Vibrations Of Shipboard Equipment (Reciprocating Machinery And Propulsion System And Shafting) Types III, IV, AND V
MIL-STD-331	Fuze and Fuze Components, Environmental and Performance Tests for
MIL-STD-810	Environmental Test Methods and Engineering Guidelines
MIL-STD-882	Standard Practice for System Safety Program Requirements
MIL-STD-1670	Environmental Criteria and Guidelines for Air-Launched Weapons

HANDBOOKS

DEPARTMENT OF DEFENSE

MIL-HDBK-310 Global Climatic Data for Developing Military Products

(Unless otherwise indicated, copies of federal and military specifications, standards, and handbooks are available from the Standardization Documents Order Desk, Building 4D, 700 Robbins Avenue, Philadelphia, PA 19111-5094.)

2.3 Non-Government publications. The following documents form a part of this document to the extent specified herein. Unless otherwise specified, the issues of the documents which are DOD adopted are those listed in the issue of the DODISS cited in the solicitation. Unless otherwise specified, the issues of documents not listed in the DODISS are the issues of the documents cited in the solicitation (see 6.2).

NORTH ATLANTIC TREATY ORGANIZATION

STANAG 2895	Extreme Climatic Conditions and Derived Conditions for Use in Defining Design Test Criteria for NATO Forces Materiel
STANAG 4370	Environmental Testing
AECTP 100	Allied Environmental Conditions and Test Procedures (AECTP) 100, Environmental Guidelines for Defence Materiel (under STANAG 4370)
AECTP 200	Allied Environmental Conditions and Test Procedures (AECTP) 200, Environmental Conditions (under STANAG 4370)
AECTP 300	Allied Environmental Conditions and Test Procedures (AECTP) 300, Climatic Environmental Tests (under STANAG 4370)
AECTP 400	Allied Environmental Conditions and Test Procedures (AECTP) 400, Mechanical Environmental Tests (under STANAG 4370)
STANAG 4240	Liquid Fuel/External Fire, Munition Test Procedures
STANAG 4241	Bullet Impact, Munition Test Procedures
STANAG 4382	Slow Heating, Munition Test Procedures
STANAG 4396	Sympathetic Reaction, Munition Test Procedures

STANAG 4439	Policy for Introduction, Assessment and Testing for Insensitive Munitions (MURAT)
STANAG 4496	Fragment Impact, Munition Test Procedure
AOP-38	Glossary of Terms and Definitions Concerning the Safety and the Suitability for Service of Munitions, Explosives and Related Products
AOP-39	Guidance on the Development, Assessment and Testing of Insensitive Munitions (MURAT)

(Application for copies should be addressed to NATO/MAS, BvdLeopold 111, 1110 Brussels, BE.)

UNITED NATIONS (UN)

UN Orange Book	ST/SG/AC.10/11/Rev 1, Second Edition, Recommendations on the Transport of Dangerous Goods, Tests and Criteria, United Nations, New York, 1990

(Application for copies should be addressed to United Nations Publications, Sales & Marketing Section, Room DC2-0853, New York, NY 10017)

AMERICAN NATIONAL STANDARDS INSTITUTE (ANSI)

ANSI Y14.3	Multi and Sectional View Drawings (DOD Adopted)

(Application for copies should be addressed to the American National Standards Institute, 11 West 42nd Street, New York, NY 10036.)

ELECTRONIC INDUSTRIES ASSOCIATION (EIA)

EIA 170	Electrical Performance Standards - Monochrome Television Studio Facilities
EIA 330	Electrical Performance Standards for Closed Circuit Television Camera 525/60 Interlaced 2:1

(Address applications for copies to the Electronic Industries Association, 2001 Eye Street, NW, Washington, DC 20006.)

AMERICAN SOCIETY FOR TESTING AND MATERIALS (ASTM)

ASTM E-1742 Inspection, Radiographic

(Application for copies of ASTMs should be sent to the American Society for Testing and Materials, 100 Barr Harbor Drive, West Conshohocken, PA 19428-2959)

2.4 Order of precedence. In the event of a conflict between the text of this document and the references cited herein, the text of this document takes precedence. Nothing in this document, however, supersedes applicable laws and regulations unless a specific exemption has been obtained.

3. DEFINITIONS

3.1 All-up-round (AUR). This refers to the completely assembled munition as intended for delivery to a target or configured to accomplish its intended mission. This term is identical to the term all-up-weapon.

3.2 Bare round or configuration. A munition with no external protection or shielding from the environment such as a container, barrier or shield.

3.3 Explosive. An explosive is a solid or liquid energetic substance (or a mixture of substances) which is in itself capable, by chemical reaction, of producing gas at such temperature, pressure and speed as to cause damage to the surroundings. Included are pyrotechnic substances even when they do not evolve gases. The term explosive includes all solid and liquid energetic materials variously known as high explosives and propellants, together with igniter, primer, initiation and pyrotechnic (e.g., illuminant, smoke, delay, decoy, flare and incendiary) compositions.

3.4 Explosive device. An item that contains explosive material(s) and is configured to provide quantities of gas, heat, or light by a rapid chemical reaction initiated by an energy source usually electrical or mechanical in nature.

3.5 Exudation. A discharge or seepage of material. The material may be a component of a chemical payload, a component of an explosive/propellant payload, or a reaction product from incompatibility or aging of munition components.

3.6 Hazardous fragment. For personnel, a hazardous fragment is a piece of the reacting weapon, weapons system or container having an impact energy of 79 N·m (58 lbf·ft) (see 6.8) or greater.

3.7 Insensitive munitions (IM). Munitions which reliably fulfill (specified) performance, readiness and operational requirements on demand, but which minimize the probability of inadvertent initiation and severity of subsequent collateral damage to the weapon platforms, logistic systems and personnel when subjected to unplanned stimuli.

3.8 Munition. An assembled ordnance item that contains explosive material(s) and is configured to accomplish its intended mission.

3.9 Munition subsystem. An element of an explosive system that contains explosive material(s) and that, in itself, may constitute a system.

3.10 Propulsion. A reaction whereby adequate force is produced to impart flight to the test item in its least restrained configuration as determined by the life cycle analysis.

3.11 Reaction types.

a. **Type I (Detonation Reaction).** The most violent type of explosive event. A supersonic decomposition reaction propagates through the energetic material to produce an intense shock in the surrounding medium, air or water for example, and very rapid plastic deformation of metallic cases, followed by extensive fragmentation. All energetic material will be consumed. The effects will include large ground craters for munitions on or close to the ground, holing/plastic flow damage/fragmentation of adjacent metal plates, and blast overpressure damage to nearby structures.

b. **Type II (Partial Detonation Reaction).** The second most violent type of explosive event. Some, but not all of the energetic material reacts as in a detonation. An intense shock is formed; some of the case is broken into small fragments; a ground crater can be produced, adjacent metal plates can be damaged as in a detonation, and there will be blast overpressure damage to nearby structures. A partial detonation can also produce large case fragments as in a violent pressure rupture (brittle fracture). The amount of damage, relative to a full detonation, depends on the portion of material that detonates.

c. **Type III (Explosion Reaction).** The third most violent type of explosive event. Ignition and rapid burning of the confined energetic material builds up high local pressures leading to violent pressure rupturing of the confining structure. Metal cases are fragmented (brittle fracture) into large pieces that are often thrown long distances. Unreacted and/or burning energetic material is also thrown about. Fire and smoke hazards will exist. Air shocks are produced that can cause damage to nearby structures. The blast and high velocity fragments can cause minor ground craters and damage (breakup, tearing, gouging) to adjacent metal plates. Blast pressures are lower than for a detonation.

d. **Type IV (Deflagration Reaction).** The fourth most violent type of explosive event. Ignition and burning of the confined energetic materials leads to nonviolent pressure release as a result of a low strength case or venting through case closures (loading port/fuze wells, etc.). The case might rupture but does not fragment; closure covers might be expelled, and unburned or burning energetic material might be thrown about and spread the fire. Propulsion might launch an unsecured test item, causing an additional hazard. No blast or significant fragmentation damage to the surroundings; only heat and smoke damage from the burning energetic material.

e. **Type V (Burning Reaction).** The least violent type of explosive event. The energetic material ignites and burns, non-propulsively. The case may open,

melt or weaken sufficiently to rupture nonviolently, allowing mild release of combustion gases. Debris stays mainly within the area of the fire. This debris is not expected to cause fatal wounds to personnel or be a hazardous fragment beyond 15 m (49 ft).

3.12 Service review organization. The various organizations within the services which are responsible for the assessment of explosive safety or IM characteristics (see 6.6).

3.13 Sympathetic reaction. The reaction of a munition or an explosive charge induced by the detonation of another like munition or explosive charge.

3.14 Threat hazard assessment (THA). An evaluation of the munition life cycle environmental profile to determine the threats and hazards to which the munition may be exposed. The assessment includes threats posed by friendly munitions, enemy munitions, accidents, handling, environmental lifecycle conditions, etc. Base the assessment on analytical or empirical data to the extent possible. The THA should also contain the potential reaction of the munition to the threats identified as well as the likely resulting collateral damage. The THA should be updated as the exposure environment changes.

3.15 Weapon system. A munition and those components and equipment required for its operation and support.

4. GENERAL REQUIREMENTS

4.1 General. A hazard assessment test program includes a test plan generated in concert with an environmental profile, and a THA. Provide rationale for not including any hazards or tests contained or referenced in this document to the service review organization for review and approval prior to executing the test program.

4.1.1 Test plan. Develop a test plan (see 6.3), and base it on the life cycle environmental profile. Include in the test plan provisions for the conduct and sequence of tests, and any environmental conditioning as illustrated on figure 1 (see paragraph 6.3). A review and concurrence is required by the appropriate service review organization(s) prior to conduct of the tests, and the review organization(s) may authorize deviations to the tests and procedures in this document when justified. The test plan may include additional tests selected from other sources or devised to investigate hazardous conditions and environments identified by hazard analyses performed as part of the system safety program described in MIL-STD-882.

4.1.2 Environmental profile. Develop a life cycle environmental profile (LCEP) using the guidance available in other documents for establishing such profiles, e.g., MIL-STD-1670 for air launched weapons, or MIL-STD-810 for general applications. Included in the LCEP are the worst case environmental conditions and limits that munitions will encounter throughout the life cycle, such as temperature, humidity, and vibration. MIL-STD-210 contains information to assist in developing the climatic portion of an environmental profile. Use the environmental profile in performing the THA, and cite it in the test plan. A review and concurrence of the LCEP is required by the appropriate service review organization(s) prior to conduct of the tests.

4.1.3 Threat hazard assessment (THA). Develop a THA (see paragraph 6.3) and ensure it contains an analysis of the munition life cycle. In the THA identify potential hazards, both qualitatively and quantitatively, and their causes and effects. Submit the THA to the appropriate service review organization(s) for approval.

4.2 Test parameters. Determine the safety and sensitivity characteristics of the item under conditions that simulate or duplicate the hazards of credible normal, abnormal or combat situation(s) identified by the THA (see paragraph 6.3). Select the test parameters to reflect maximum stress levels forecasted by the THA, e.g., bullet impact velocity, maximum storage temperature.

4.2.1 Test item temperature. Unless otherwise specified (see 6.4), ensure all ambient temperature test items are at 25 ± 10 degrees Celsius (°C) (77 ± 18 degrees Fahrenheit (°F)).

4.3 Passing criteria. Passing criteria for the tests are in section 5 or STANAG 4439. Failure to meet all predetermined test criteria is not necessarily grounds for automatic rejection of that weapon system for service use.

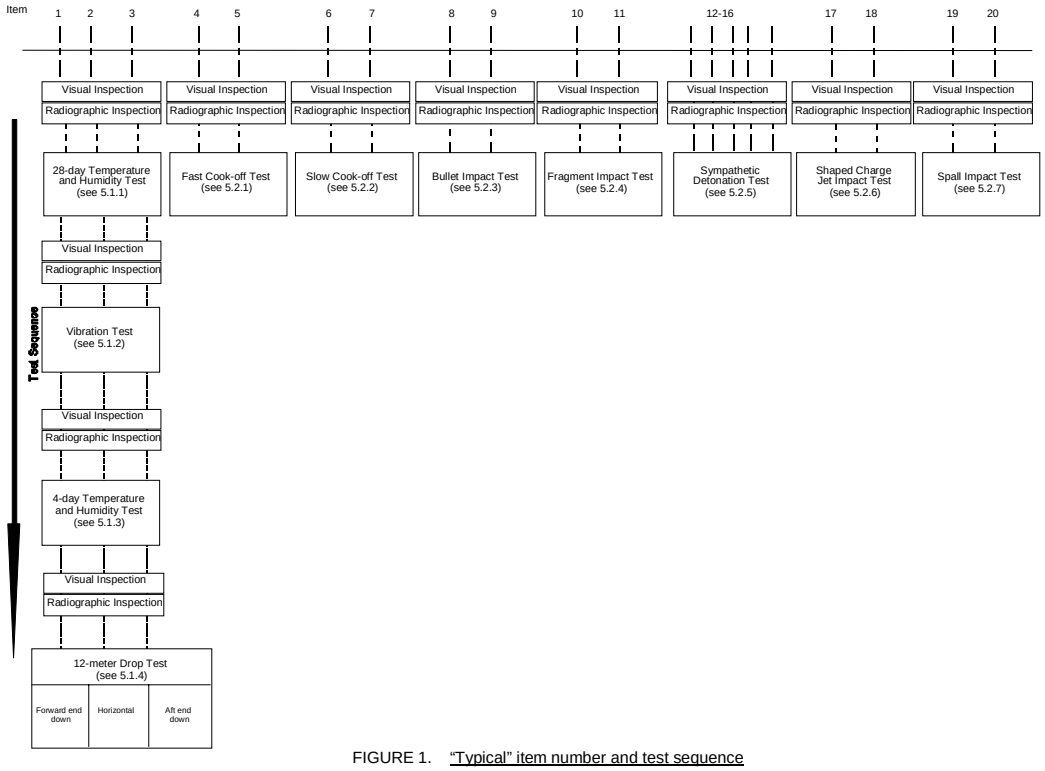

FIGURE 1. "Typical" item number and test sequence

4.4 Hazard assessment test report. Develop a hazard assessment test report (see paragraph 6.3) that contains detailed information specified herein (see section 5), and is consistent with the test plan (see paragraph 4.1.1). Include in the report, rationale for deviations from the test plan, test item configuration and identification, test date, test results, and safety and vulnerability related conclusions that may be drawn from the test results.

4.5 Hardware. Ensure the item to be tested is either production hardware or a representative of production hardware. Use of simulated components for non-explosive components is acceptable providing they accurately simulate the thermal, confinement, mass and retention characteristics of their counterparts. When the item differs from production hardware, describe the configuration in the test plan.

4.6 Test facilities. Ensure the test chamber or test fixtures used do not interfere with the test stimulus being imposed on the test item or influence the subsequent reaction of the item. Unless otherwise specified, use tolerances of test conditions and instrumentation calibrations in accordance with MIL-STD-810.

4.6.1 Witness plates. Witness plates are used to "witness" a reaction by providing an impact surface for fragments and shock waves. Design witness plates to survive a reaction and provide post-test physical evidence of its severity. Information regarding the degree of test item fragmentation may be obtained by locating witness plate(s) away from the test item.

Use relatively thin plates to permit sufficient data collection of impacting fragments. Alternatively, information regarding the shock pressure produced by the reacting explosive(s) may be obtained by placing witness plate(s) in direct contact with the test item. Use plates of sufficient thickness, hardness, and strength to withstand detonation of the test item without fracturing.

Determination of the specific number, types, sizes, and location of the witness plates is the responsibility of the testing activity. However, the testing activity must ensure the witness plates are integrated into the test setups in a manner that will not influence the response of the test item, and does not compromise the collection of other required data while performing their function. Witness plate use and configuration should be included in detailed test plans submitted to the appropriate service IM review organizations for approval.

4.7 Configuration. Ensure the test item configuration accurately represents the configuration of the item in the life cycle phase being duplicated by the test. For fast cook-off, slow cook-off, bullet impact, sympathetic reaction, shaped charge jet and 12 meter (40 ft) drop testing, refer to the respective STANAG's for test item configuration. Temperature and humidity, fragment impact, shaped charge jet spall impact tests may be done on the major munition subsystem level. The electronic or other sections not containing explosives may be mechanically, geometrically and thermally simulated for any test. Specify the test item configuration to be used in detail in the test plan, and have it approved by the service review organization. Mount the test items so they do not affect the munition response to the given test.

4.8 Pre-test examination. Unless otherwise specified (see 6.4), prior to each test (see figure 1), conduct a visual and radiographic inspection of the test item, in accordance with ASTM E-1742, to ensure no unusual conditions exist that might invalidate the tests. Set or adjust all unit safety mechanisms and devices to a safe condition. Take photographs of the test setup (see paragraph 6.3), and include identification information (such as nomenclature, MK, Mod, serial number, test facility, date, etc.) in the field of view.

4.9 Post-test requirements. Provide a complete description of significant post-test remains of the munition. Document the location (distance from original test position), dimensions and weight of each significant recovered part on the appropriate test data sheet. The appropriate service review organization determines the official reaction violence level. Provide data sheets with the test report and photograph the test remains (see paragraph 6.3). In the field of view include identification information (nomenclature, MK, Mod, test facility, date, etc.).

4.10 Photographic requirements. Select the photographic media to be used from the following (see paragraph 6.3):

4.10.1 Still photograph coverage. Take black and white or color still photographs or digital stills (with a minimum image resolution of one megapixel) as specified in the contract, and use the film format size and the number of original prints and negatives as specified in the contract. When negative color material is used, include the original color negative and one matching positive color transparency. Place all negatives in negative preservers.

4.10.2 Video coverage. EIA 170 and EIA 330 describe the video quality. Use a video tape recorder with magnetic video tape as the video media. For normal speed video coverage, use a frame rate of 18 to 30 frames per second include synchronous sound recording. For high speed video coverage, use a minimum frame rate of 400 frames per second.

4.10.3 Motion picture coverage. For motion picture coverage, utilize professional quality footage and do not edit the footage. For normal speed motion picture coverage, use a frame rate of 18 to 30 frames per second and include synchronous sound recording. For high speed motion picture coverage, use a minimum frame rate of 400 frames per second, or as required by the test plan (see paragraph 4.1.1). The sympathetic detonation test shall be recorded using high speed motion picture cameras capable of photographing 32,000 images per second, minimum, or as required by the test plan (see 4.1.1).

For video or motion picture coverage, ensure that the means chosen (quality, speed, type) will adequately capture the reaction event so that a detailed analysis can be conducted.

4.10.4 Instrumentation photography. For instrumentation photography, utilize professional quality color positive film with a time base recorded on the film preferably in the sprocket area rather than the image area.

5. DETAILED REQUIREMENTS

5.1 Basic safety tests. Consider all of the following tests for inclusion in the hazard assessment test program. Unless otherwise specified (see 6.4), test three test items sequentially as shown in figure 1.

5.1.1 28-day temperature and humidity (T&H) test.

5.1.1.1 Description of test. The 28-day T&H test consists of exposing the test item to alternating 24-hour periods (no period lasting less than 24 hours) of high and low temperatures for a total of 28 days. Derive the temperature range and relative humidity from the environmental profile of paragraph 4.1.2. Test a minimum of three test items.

5.1.1.2 Test procedure. Develop test procedures (see paragraph 6.3) that reflect the temperature and humidity conditions measured or forecast. Visually examine each test item prior to testing, and record the appropriate critical dimensions. Unless otherwise specified (see paragraph 6.4), prior to testing, radiographically examine the test items determine material condition.

5.1.1.2.1 Test facilities. Use chambers that are capable of producing the required temperatures and humidity over the time spans specified in paragraph 5.1.1.1, and that do not obstruct the free flow of air in contact with the item under test. Recommend using separate chambers for each test environment specified.

5.1.1.2.2 Temperature cycling. Begin the test by subjecting the test item to either the high or low temperature environment for a 24-hour period. At the end of this period, transfer the test item to the other environment. Perform the transfer in less than 30 minutes, but if the transfer time exceeds 30 minutes, document the actual time in the test data report (see paragraphs 5.1.1.5 and 6.3). At the end of each high and low temperature cycle change, inspect the test item for damage and collect any exudate for chemical analysis. Continue testing and inspecting for the number of periods specified for the test.

5.1.1.2.3 Test interruptions. Minimize interruptions of the test. If the test is interrupted by slack labor periods (weekends, holidays), maintain the last test environment encountered prior to the slack period. Extend the test period as necessary to complete at least 20 temperature changes (hot/cold) or 10 full cycles. A full cycle consists of two temperature changes, e.g., hot-to-cold-to-hot.

5.1.1.3 Instrumentation. Continuously monitor and record the temperature and humidity levels of the test chamber.

5.1.1.3.1 Photography. Use still photographs to record the condition of the test item and test setup prior to and after the test (see paragraph 6.3).

5.1.1.4 Passing criteria. These criteria are based on the final observation.

a. No reaction of the explosive.

b. No exudation containing explosive material.

c. Explosives do not crack or separate in a manner which would create a hazardous condition.

d. All safety devices remain in the safe position or safe condition.

e. The structural integrity of the item is not compromised by corrosion, loosening of joints or other physical distortions.

5.1.1.5 Documentation. Develop a data sheet documenting the test results (see paragraph 6.3).

5.1.2 Vibration test.

5.1.2.1 Description of test. The vibration test consists of exposing the test item to the most intense vibration environment that it will encounter during the life cycle as determined by the THA. Test a minimum of three items which have undergone testing in accordance with paragraph 5.1.1.

5.1.2.1.1 Vibration orientation. Conduct vibration tests along the appropriate mutually perpendicular axes.

5.1.2.1.2 Vibration schedule. Determine the vibration schedule from the environmental profile of paragraph 4.1.2.

5.1.2.1.3 Changes in vibration schedule. Changes in the selected schedule of vibration levels, frequency ranges, and time duration of the test can be effected by the program manager or the procuring activity with the approval of the service review organization.

5.1.2.1.4 Test temperatures. Conduct vibration tests at low and elevated temperatures or ambient temperature if the anticipated life cycle environment so dictates.

5.1.2.2 Test procedures. Develop test procedures (see paragraph 6.3) that reflect vibration modes and temperatures anticipated in the item's environment. Consider

vibration environments as specified in MIL-STD-167 and MIL-STD-810 including one or more of the following:

5.1.2.2.1 Transportation vibration. If the item is always containerized when transported, vibrate the item in the container. Vibrate the item in the normal configuration as shipped. The item may be vibrated in the bare configuration if it can be shown that testing in the bare configuration produces an equivalent environment. If the item is stowed in a ready service configuration, vibrate the item in a fixture and orientation representative of that configuration.

5.1.2.2.2 Aircraft vibration. Vibrate the item in the configuration utilized for aircraft combat carriage.

5.1.2.2.3 Shipboard vibration. Vibrate the item in its shipboard stowage configuration. Should the item be carried on a launcher or in a ready service configuration, vibrate the item in a fixture and orientation representative of that configuration also.

5.1.2.3 Instrumentation. Record the test equipment inputs and test item responses. Record test item temperatures at both the skin and internal free space.

5.1.2.3.1 Photography. Use still photographs to record the condition of the test item and setup prior to and after the test (see paragraph 6.3).

5.1.2.4 Passing criteria. These criteria are based on the final observation.

a. No reaction of the explosive.

b. No exudation containing explosive material.

c. Explosives do not crack or separate in a manner which would create a hazardous condition.

d. All safety devices remain in the safe condition.

e. The structural integrity of the item is not be compromised by corrosion, loosening of joints or other physical distortions.

5.1.2.5 Documentation. Develop a data sheet documenting the test results (see paragraph 6.3).

5.1.3 4-day temperature and humidity (T&H) test.

5.1.3.1 Description of test. The 4-day T&H test is a 4-day version of the 28-day T&H test, and consists of exposing the item to alternating 24-hour periods of temperature and relative humidity as derived from the environmental profile of paragraph 4.1.2. All data relative to the 28-day T&H test is required for the 4-day T&H test (see paragraphs 5.1.1 and 6.3). Test a minimum of three items which have undergone testing in accordance with paragraphs 5.1.1 and 5.1.2. Subject the test items to two complete cycles.

5.1.3.2 Passing criteria. These conditions are based on the final observation.

a. No reaction of the explosive.

b. No exudation containing explosive material.

c. Explosives do not crack or separate in a manner which would create a hazardous condition.

d. All safety devices remain in the safe condition.

e. The structural integrity of the item is not be compromised by corrosion, loosening of joints or other physical distortions.

5.1.3.3 Documentation. Develop a data sheet documenting the test results (see paragraph 6.3).

5.1.4 12-meter (40-foot) drop test. Perform this test in accordance with STANAG 4375.

5.1.4.1 Passing criteria. No reaction of the explosives in the item. No rupture of the test item that dislodges or disrupts explosive material. The item is safe to handle and be disposed by normal explosive ordnance disposal (EOD) procedures. All safety devices remain in a safe condition.

5.2 Insensitive munitions (IM) tests. The tests contained in, or referenced in this section provide a basis to test munitions against meaningful, credible, potential threats and evaluate munition response against criteria which reflect the services IM vulnerability and hazard reduction goals. Threats have not been fully standardized for all operational configuration tests since the threat may be different for each weapon platform. In all cases, use the THA and a system threat analysis to determine particular test and test parameters for the operational configuration test.

5.2.1 Fast cook-off (liquid fuel/external fire) test. Perform this test in accordance with STANAG 4240.

5.2.1.1 Passing criteria. See STANAG 4439 for passing criteria and AOP-39 for reaction definitions.

5.2.2 Slow cook-off (slow heating) test. Perform this test in accordance with STANAG 4382.

5.2.2.1 Passing criteria. See STANAG 4439 for passing criteria and AOP-39 for reaction definitions.

5.2.3 Bullet impact test. Perform this test in accordance with STANAG 4241. See figure 2.

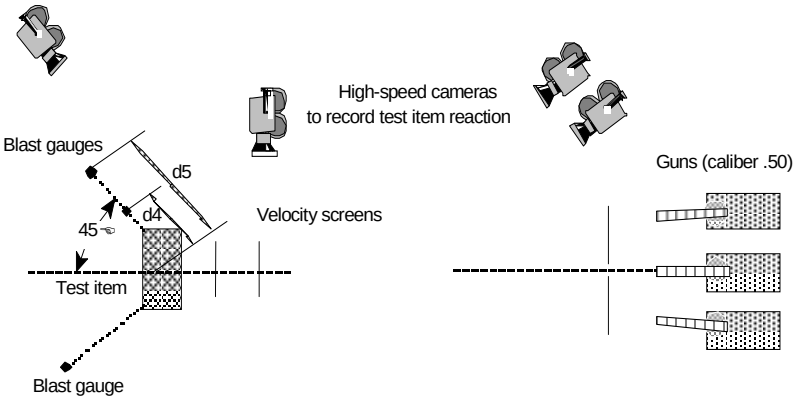

Top View

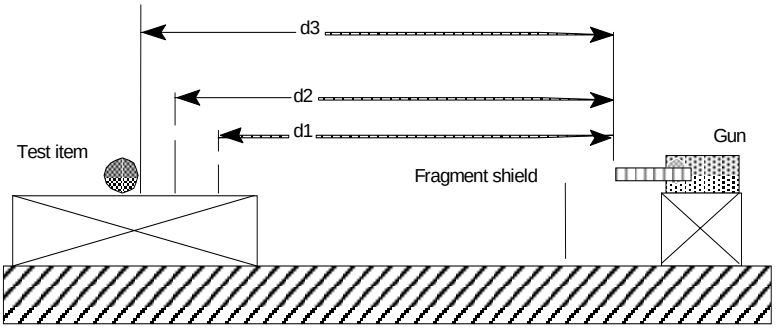

Where:

d1 = Distance to first velocity screen
d2 = Distance to second velocity screen
d3 = Distance to test item
d4 = Distance to first blast gauge
d5 = Distance to second blast gauge(s)

Elevation View

NOTE: Interpret views in accordance with ANSI Y14.3.

FIGURE 2. "Typical" bullet impact test setup.

5.2.3.1 Passing criteria. See STANAG 4439 for passing criteria and AOP-39 for reaction definitions.

5.2.4 Fragment impact test. Perform this test in accordance with STANAG 4496. See figure 3.

5.2.4.1 Passing criteria. See STANAG 4439 for passing criteria and AOP-39 for reaction definitions.

5.2.5 Sympathetic detonation (sympathetic reaction). Perform this test in accordance with STANAG 4396.

5.2.5.1 Passing criteria. See STANAG 4439 for passing criteria and AOP-39 for reaction definitions.

5.2.6 Shaped charge jet impact test. Perform this test in accordance with STANAG 4526.

5.2.6.1 Passing criteria. See STANAG 4439 for passing criteria and AOP-39 for reaction definitions

5.2.7 Spall impact test.

5.2.7.1 Description of test. The spall impact test is conducted to determine the response of munitions to the impact of hot spall fragments. Determine applicability of the test based upon the THA.

5.2.7.2 Test procedure.

5.2.7.2.1 Test setup. A typical test setup is illustrated on figure 4. The spall fragments are produced by impacting a 25-mm (1-in) thick rolled homogeneous armor (RHA) plate with the shaped charge jet of an 81-mm precision shaped charge. Ensure the standoff distance between the shaped charge and the RHA plate is 147 mm (5.8 in). Select the placement of the test item behind the RHA plate so that it is impacted by spall fragments only. Ensure a minimum of 4 spall fragments/6,450 mm^2 (4 spall fragments/10 in^2) of presented area (up to 40 fragments total) impact the test item. The test activity is responsible for calibrating the test setup to determine the placement of the test item that will provide the required hit density.

5.2.7.2.2 Test item configuration. Use a bare munition configuration as the test item. Test a minimum of two test items.

5.2.7.3 Photography. Use closed-circuit video, real time motion picture photography (with sound) or both to document the test events (see paragraph 6.3).

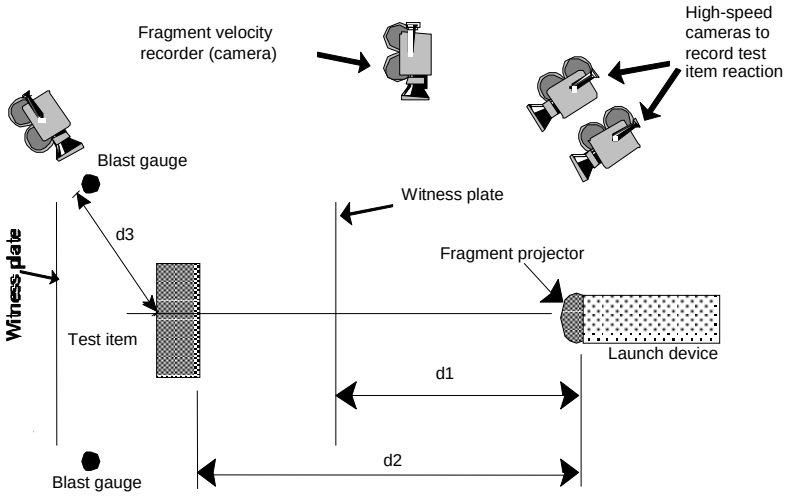

Where:

d1 = Distance from fragment mat to witness plate

d2 = Distance from fragment mat to test item

d3 = Distance from test item to blast gauge(s)

Top View

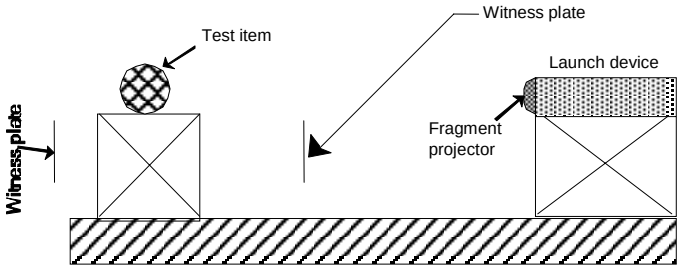

Elevation View

Note: Interpret views in accordance with ANSI Y14.3.

FIGURE 3. "Typical" fragment impact test setup.

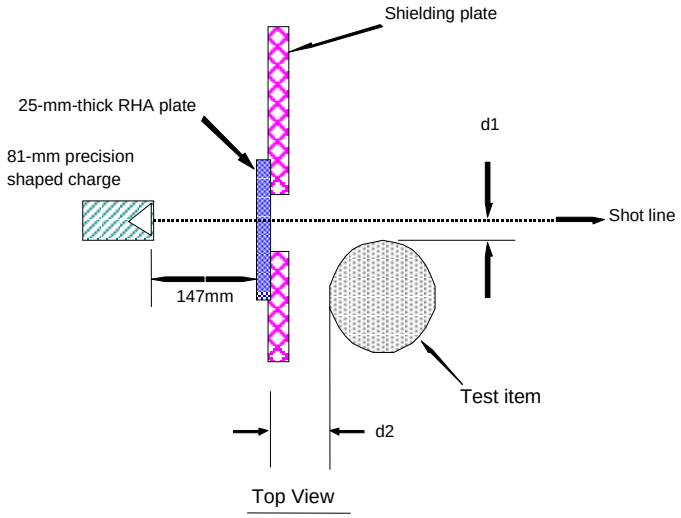

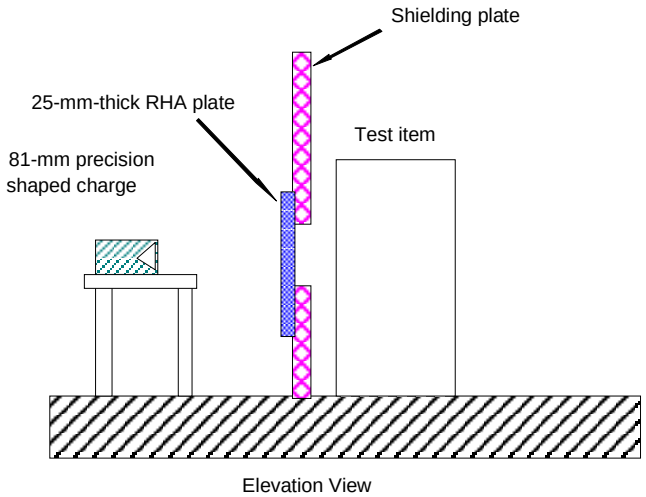

NOTE: Interpret views in accordance with ANSI Y14.3.

FIGURE 4. "Typical" spall impact test configuration.

5.2.7.4 Passing criteria. No sustained burning occurs as a result of the spall impact test. For Army test items, the passing criteria depends on system vulnerability requirements and the THA.

5.2.7.5 Documentation. Develop a data sheet documenting the test results (see paragraph 6.3) and provided it with the final test report.

5.3 Additional tests. In addition to the tests of 5.1 and 5.2, tests are to be developed or selected from other test document sources to form the test plan to assess the safety of the weapon system as determined by the system safety program. Consider the following non-inclusive list of factors in performing the hazard analyses required as the basis for developing the test plan.

Acceleration
Accidental Release
Acoustical
Aerodynamic Heating
Atmospheric Lightning
Altitude
Catapult and Arrested Landing
Double Feed of Ammunition
Drop
Dust
Electromagnetic Interference
Electromagnetic Radiation
Electromagnetic Pulse
Electromagnetic Vulnerability
Electrostatic Discharge
Explosive Atmosphere
Faulty Unit
Flooding
Fungus
HERO - Hazards of Electromagnetic Radiation to Ordnance
Hot Gun Cook-Off
Humidity
Jettison
Jolt
Jumble
Leak Detection - Halogen-helium
Leakage - Immersion
Materials Compatibility
Muzzle Impact/Impact Safe Distance
Pressurization
Proof Pressure Firings

Radiography
Rain
Salt Fog
Shock
Solar Radiation - Sunshine
Space Simulation - Unmanned Test
Static Detonator Safety
Time to Airburst
Toxicity
Vibration

6. NOTES

(This section contains information of a general or explanatory nature that may be helpful but is not mandatory.)

6.1 Intended use. The tests described herein or referenced are used to assess the safety and insensitive munitions characteristics of non-nuclear ordnance. The ordnance covered by these tests is designed for military use only, thus this standard has no commercial application.

6.2 Issue of DODISS. When this standard is used in acquisition, the applicable issue of the DODISS must be cited in the solicitation (see 2.1.1 and 2.2).

Formatted

6.3 Associated Data Item Descriptions (DIDs). This standard is cited in DoD 5010.12-L, Acquisition Management Systems and Data Requirements Control List (AMSDL), as the source document for the following DIDs. When it is necessary to obtain the data, the applicable DIDs must be listed on the Contract Data Requirements List (DD Form 1423), except where the DOD Federal Acquisition Regulation Supplement exempts the requirement for a DD Form 1423.

Reference Paragraph	DID Number	DID Title
4.1.1	DI-T-30714	Master Test Plan/Program Test Plan
4.1.1, 5.1.1.2, 5.1.2.2, 5.2.5.2, 5.2.6.2	DI-NDTI-80603	Test Procedure
4.1.3, 4.2	DI-SAFT-81124	Threat Hazard Assessment
4.4	DI-SAFT-81125	Hazard Assessment Test Report
4.8, 4.9, 4.10, 5.1.1.3.1, 5.1.2.3.1, 5.1.3.1, 5.1.4.1, 5.2.1, 5.2.2, 5.2.3, 5.2.4.3.4, 5.2.5, 5.2.6, 5.2.7.3	DI-SAFT-81126	Photographic Requirements
5.1.1.5, 5.1.3.3	DI-SAFT-81127	Temperature and Humidity Test Data
5.1.2.5	DI-SAFT-81128	Vibration Test Data
5.1.4.1	DI-SAFT-81129	40-Foot Drop Test Data
5.2.1	DI-SAFT-81130	Fast Cook-Off Test Data
5.2.2	DI-SAFT-81131	Slow Cook-Off Test Data

5.2.3	DI-SAFT-81132	Bullet Impact Test Data
5.2.4.5	DI-SAFT-81133	Fragment Impact Test Data
5.2.5	DI-SAFT-81134	Sympathetic Detonation Test Data
5.2.6	DI-SAFT-81135	Shaped Charge Jet Impact Test Data
5.2.7.5	DI-SAFT-81136	Spall Impact Test Data

The above DIDs were those cleared as of the date of this standard. The current issue of AMSDL must be researched to ensure that only current and approved DIDs are cited on the DD Form 1423.

6.4 Tailoring guidance. To ensure proper application, invitations for bids, requests for proposals, and contractual statements of work should tailor the requirements in sections 4 and 5 of this standard to exclude any unnecessary requirements. Contractual documents must specify the following:

a. Ambient test item temperature if other than as specified (see paragraph 4.2.1).

b. When a pre-test examination is not required (see paragraphs 4.8 and 5.1.1.2).

c. The number of test items to be tested if other than as specified (see paragraph 5.1).

6.5 Submission of test reports and results. Submit copies of test reports and results to the following address for storage in the National Insensitive Munitions Information System (NIMIS-II):

Navy/Marine Corps—(for IM):

Commanding Officer
Naval Ordnance Safety & Security Activity
Attn: NOSSA, N6
Indian Head, MD 20640-5555

6.6 Service review organizations. The following service contacts are responsible for the assessment of explosive safety and IM characteristics:

Army - (for explosive safety):

Director

U.S. Army Technical Center for Explosives Safety
Attn: SOSAC-EST
1 C Tree Road, Bldg 35
McAlester, OK 74501-9053

Army - (for IM):

Commander
U.S. Army TACOM
Armament Research, Development and Engineering Center
Attn: AMSTA-AR-ASL Army Insensitive Munitions Board
Picatinny Arsenal, NJ 07806-5000

Navy/Marine Corps - (for explosive safety):

Commanding Officer
Naval Ordnance Safety & Security Activity
Attn: NOSSA, N3
Indian Head, MD 20640-5555

Navy/Marine Corps - (for IM):

Commanding Officer
Naval Ordnance Safety & Security Activity
Attn: NOSSA, N6
Indian Head, MD 20640-5555

Air Force - (for explosive safety):

AFSA/SEWV
9700 G Street
Kirtland AFB, NM 87117-5670

Air Force - (for IM):

ASC/YOX
Eglin AFB, FL 32542-6808

6.7 Tests for hazard classification. The following tests referenced herein have potential application for hazard classification but some specifics of testing may require approval by service review organizations and the DDESB prior to testing:

12-m (40-ft) drop
Fast cook-off
Slow cook-off

Bullet impact
Sympathetic detonation

6.8 Units of measurement and abbreviations. Units of measurement are expressed in metric or SI (Le Système International d'Unités). The corresponding English equivalent follows in parentheses. Standard abbreviations used throughout this document are as follows:

Metric (SI)			English		
°C	-	degrees Celsius	°F	-	degrees Fahrenheit
mm	-	millimeters	in	-	inches
m	-	meters	ft	-	feet
m/s	-	meters per second	ft/s	-	feet per second
N·m	-	newton meter	lbf·ft	-	pound-force foot
kPa	-	kilopascal (gauge)	psig	-	pounds per square inch (gauge)

6.9 Subject term (key word) listing.

Bullet impact test
Drop test
Fast cook-off test
Fragment impact test
Humidity test
Insensitive munitions
Munitions, insensitive
Safety test
Shaped charge jet impact test
Slow cook-off test
Spall impact test
Sympathetic detonation test
Temperature test
Vibration test

6.10 International standardization agreements. Certain provisions of this standard are the subject of international standardization agreements. These are:

MIL-STD-2105B	NATO STANAG
12-m (40-ft) drop test	4375
Fast cook-off test	4240
Slow cook-off test	4382
Bullet impact test	4241
Sympathetic detonation test	4396
Fragment impact test	4496
Hazard assessment tests for munitions	4439

When change notice, revision, or cancellation of this standard is proposed that will modify the international agreement concerned, the preparing activity will take appropriate action through international standardization channels, including

departmental standardization offices, to change the agreement or make other appropriate accommodations.

6.11 Changes from previous issue. Marginal notations are not used in this revision to identify changes with respect to the previous issue due to the extensiveness of the changes.

Custodians:
Army - AR
Navy - OS
Air Force - 11

Review activities:
Army - TE
Navy - AS
Air Force - 18

Preparing activity:
Navy - OS
(Project SAFT-0041)

STANDARDIZATION DOCUMENT IMPROVEMENT PROPOSAL

INSTRUCTIONS

1. The preparing activity must complete blocks 1, 2, 3, and 8. In block 1, both the document number and revision letter should be given.
2. The submitter of this form must complete blocks 4, 5, 6, and 7.
3. The preparing activity must provide a reply within 30 days from receipt of the form.

NOTE: This form may not be used to request copies of documents, nor to request waivers, or clarification of requirements on current contracts. Comments submitted on this form do not constitute or imply authorization to waive any portion of the referenced document(s) or to amend contractual requirements.

I RECOMMEND A CHANGE:

1. DOCUMENT NUMBER
MIL-STD-2105

2. DOCUMENT DATE (YYMMDD)
030714

3. DOCUMENT TITLE
HAZARD ASSESSMENT TESTS FOR NON-NUCLEAR MUNITIONS

4. NATURE OF CHANGE (*Identify paragraph number and include proposed rewrite, if possible. Attach extra sheets as needed.*)

5. REASON FOR RECOMMENDATION

6. SUBMITTER

a. NAME (*Last, First, Middle Initial*)

b. ORGANIZATION

C. ADDRESS (*Include Zip Code*)

d. TELEPHONE (*Include Area Code*)
(1) Commercial

(2) DSN
(*If applicable*)

7. DATE SUBMITTED
(*YYMMDD*)

8. PREPARING ACTIVITY

a. NAME
Commander, Indian Head Division
Naval Surface Warfare Center

b. TELEPHONE (*Include Area Code*)
(1) Commercial
301-744-1973

(2) DSN
354-1973

c. ADDRESS (*Include Zip Code*)
Documentation Branch (Code 4230F)
101 Strauss Avenue
Indian Head, MD 20640-5035

IF YOU DO NOT RECEIVE A REPLY WITHIN 45 DAYS, CONTACT:
Defense Standardization Program Office (DLSC-LM)
8725 John J. Kingman Road, Suite 2533
Fort Belvoir, VA 22060-6221

DOCUMENT
PFP(AC/326)D(2006)0004

CNAD AMMUNITION SAFETY GROUP (AC/326)
RATIFICATION DRAFT 1 - STANAG 4439 (EDITION 2)
POLICY FOR INTRODUCTION AND ASSESSMENT OF INSENSITIVE MUNITONS (MURAT)

Memorandum by the Assistant Secretary General for Defence Investment
(RATIFICATION REQUEST)

Reference: PFP(AC/326-SG/3)DS(2006)0001 dated 19 April 2006

1. The CNAD Ammunition Safety Group (AC/326) Sub-Group 3, has approved draft STANAG 4439 (Edition 2) at its Spring 2006 meeting, and requests ratification.

2. In line with this decision, the agreed text is herewith forwarded to delegations, in order to obtain the national ratification by 16 October 2006. Using the attached form, Nations are requested to inform my staff of their national ratification references, together with a statement of the actual or forecast date by which national implementation is intended to be effective. Furthermore, the service or services within which the standard applies should be indicated or corrected.

3. Most Ministries of Defence contain a standardization office or standardization liaison officer who can give advice on the national procedure to be followed in order to obtain a formal ratification reference. It is recommend that contact be made with that office.

4. As soon as sufficient ratifications have been received, this STANAG will be forwarded to Director NATO Standardization Agency for promulgation.

Marshall Billingslea

1 Annex

Action Officer: M-C. Mortier, Ext. 3942
Original: English
G:\Docum\AC326\Main Group\Documents\2006\PFP(AC_326)D(2006)0004-4439Ed2-E.doc

ANNEX 1
PFP(AC/326)D(2006)0004

NATIONAL REPLY ON THE RATIFICATION AND IMPLEMENTATION OF A STANAG

(National Reference and Date)

To: Deputy Assistant Secretary General for Armaments Directorate, Defence Investment, NATO Headquarters

Subject: STANAG 4439 (Edition 2) – RATIFICATION DRAFT 1 – POLICY FOR INTRODUCTION AND ASSESSMENT OF INSENSITIVE MUNITIONS (MURAT)

Reference: PFP(AC/326)D(2006)0004 dated 11 July 2006

1. (*nation*) ratifies/does not ratify (*) the agreement received under cover reference.

2. Ratification and implementation details are as follows:

RATIFICATION REFERENCE AND DATE	IMPLEMENTATION					
	Forecast Date			Actual Date		
	NAVY	ARMY	AIR	NAVY	ARMY	AIR

3. NATIONAL IMPLEMENTING DOCUMENT(s):

4. RESERVATIONS:

5. OTHER INFORMATION:

……..
(Signature block)

(*) Delete as appropriate

Enclosure
PFP(AC/326)D(2006)0004

STANAG 4439
(Edition 2)
(Ratification Draft 1)

NORTH ATLANTIC TREATY ORGANIZATION
(NATO)

NATO STANDARDIZATION AGENCY
(NSA)

STANDARDIZATION AGREEMENT
(STANAG)

SUBJECT: **POLICY FOR INTRODUCTION AND ASSESSMENT OF INSENSITIVE MUNITIONS (MURAT)**

Promulgated on

J. MAJ
Brigadier General, POL(A)
Director, NSA

STANAG 4439
(Edition 2)
(Ratification Draft 1)

RECORD OF AMENDMENTS

No.	Reference/Date of amendment	Date entered	Signature

EXPLANATORY NOTES

AGREEMENT

1. This NATO Standardization Agreement (STANAG) is promulgated by the Director NATO Standardization Agency under the authority vested in him by the NATO Standardization Organisation Charter.

2. No departure may be made from the agreement without informing the tasking authority in the form of a reservation. Nations may propose changes at any time to the tasking authority where they will be processed in the same manner as the original agreement.

3. Ratifying nations have agreed that national orders, manuals and instructions implementing this STANAG will include a reference to the STANAG number for purposes of identification.

RATIFICATION, IMPLEMENTATION AND RESERVATIONS

4. Ratification, implementation and reservation details are available on request or through the NSAwebsites (internet http://nsa.nato.int; NATO Secure WAN http://nsa.hq.nato.int).

FEEDBACK

5. Any comments concerning this publication should be directed to NATO/NSA – Bvd Leopold III - 1110 Brussels - Belgium.

STANAG 4439
(Edition 2)
(Ratification Draft 1)

NAVY/ARMY/AIR

NATO STANDARDIZATION AGREEMENT (STANAG)

POLICY FOR INTRODUCTION AND ASSESSMENT OF INSENSITIVE MUNITIONS (MURAT)

Annexes:

A. Full Scale test procedures.
B. Types of response.

Related Documents:

AOP-15 Guidance on the Assessment of the Safety and Suitability for Service of Munitions for NATO Armed Forces.
AOP-38 Glossary of Terms and Definitions Concerning the Safety and Suitability for Service of Munitions, Explosives and Related Products.
AOP-39 Guidance on the Assessment and Development of Insensitive Munitions (MURAT).
STANAG 4240 Liquid Fuel / External Fire, Munition Test Procedures
STANAG 4241 Bullet Impact, Munition Test Procedures
STANAG 4382 Slow Heating, Munition Test Procedures
STANAG 4396 Sympathetic Reaction, Munition Test Procedures
STANAG 4496 Fragment Impact, Munition Test Procedures
STANAG 4526 Shaped Charge Jet, Munition Test Procedures

AIM

1. The aim of this agreement is to define a policy for the assessment and introduction into service of Insensitive Munitions (IM) /Munitions à risques atténués (MURAT).

AGREEMENT

2. Ratifying nations agree to:

   a. Develop and/or introduce into service munitions that are as insensitive as reasonably practicable.
   b. Apply the guidance of AOP-39 for the development and assessment of insensitive munitions.

DEFINITIONS

3. Insensitive Munitions (IM) /Munitions à risques atténués (MURAT). Munitions which reliably fulfill their performance, readiness and operational requirements on demand and which minimize the probability of inadvertent initiation and severity of

subsequent collateral damage to weapon platforms, logistic systems and personnel when subjected to selected accidental and combat threats.

4. IM Assessment. A process to determine the compliance of a munition with the IM requirements.

5. IM signature. A representation of the IM level of the munition, i.e. the response level of the munition to the IM threats.

GENERAL

6. Introduction of IM/MURAT into service enhances the survivability of logistical and tactical combat systems, platforms and stockpiles, and minimizes the risk of injury to personnel. It accomplishes this by significantly reducing the potential for the inadvertent reaction of a munition to occur; the scope and/or violence of a reaction, if it were to occur; and the consequences from such a reaction.

7. In addition, IM provide for more cost effective and efficient transport, storage and handling of munitions. These benefits could be realized through assignment of a more favorable hazard classification.

DETAILS OF THE AGREEMENT

8. Participating nations agree to introduce into service munitions that are as insensitive as reasonably practicable. The availability of IM technology shall be considered in all munitions development, product improvement and replenishment activities. Guidance on IM design techniques is given in AOP-39.

9. To be considered insensitive, a munition in a particular configuration shall meet the requirements of Table I below.

Table I: Insensitive munitions threats and requirements.
(Types of response are defined in Annex B)

Threat	Requirement
Magazine/store fire or aircraft/vehicle fuel fire	No response more severe than Type V (Burning)
Fire in an adjacent magazine, store or vehicle	No response more severe than Type V (Burning)
Small arms attack	No response more severe than Type V (Burning)
Fragmenting munitions attack	No response more severe than Type V (Burning)
Shaped charge weapon attack	No response more severe than Type III

Threat	Requirement
	(Explosion)
Most severe reaction of same munition in magazine, store, aircraft or vehicle	No propagation of reaction more severe than Type III (Explosion)

10. Any variation in the threats shall be justified through an approved munition threat analysis.

11. An IM assessment may encompass the full range of testing, modeling, simulation and analyses used to develop increased confidence in the IM response of a munition. A methodology for conducting an IM assessment is given in AOP-39. If Full Scale Tests are part of the IM assessment, they shall be conducted in accordance with the procedures listed in Annex A.

12. The IM level should be assessed for any particular configuration of a munition during its life cycle. This level shall be expressed as its 'IM Signature'. A munition may have several IM signatures representing various configurations. Guidance on presenting the IM signature is given in AOP-39. This signature shall represent the production standard.

13. A munition is considered IM compliant for a given life cycle if, for each considered threat, it meets the requirement expressed in Table I for any relevant configuration(s).

14. Each nation is responsible for the IM assessment of munitions introduced into service for its own forces. Assessment of munitions against the IM requirements is an essential part of the assessment of safety and suitability for service. It complements, but does not replace, existing safety and suitability assessments (AOP-15).

15. Nations may assign categories (e.g. MURAT labels) based on the IM level attained by a munition in a given configuration.

16. The National Authority may approve the introduction into service of munitions that fail to meet the IM requirements.

17. Upon receipt of a request through appropriate national channels, the nation responsible for the development of the munition shall provide the methodology and data used to assess the IM level of the munition to other nations participating in a collaborative weapon development or procurement programme.

IMPLEMENTATION OF THE AGREEMENT

18. This STANAG is implemented when a nation has issued instructions that all future munitions introduced into service for its forces will be assessed and approved in accordance with this agreement and AOP 39.

FULL SCALE TEST PROCEDURES

Threat	Test STANAG number
Magazine/store fire or aircraft/vehicle fuel fire	STANAG 4240
Fire in an adjacent magazine, store or vehicle	STANAG 4382
Small arms attack	STANAG 4241
Fragmenting munition attack	STANAG 4496
Shaped charge weapon attack	STANAG 4526
Reaction propagation in magazine, store, aircraft or vehicle	STANAG 4396

TYPES OF RESPONSE

Type I Response (Detonation).

The most violent type of explosive event. A supersonic decomposition reaction (detonation) propagates through the energetic material to produce an intense shock in the surrounding medium (e.g. air or water) and a very rapid plastic deformation of metallic cases followed by extensive fragmentation. All energetic materials will be consumed. The effects will include large ground craters for munitions on or close to the ground, perforation, plastic deformation or fragmentation of adjacent metal plates, and blast overpressure damage to nearby structures.

Type II Response (Partial Detonation).

The second most violent type of explosive event. Some but not all the energetic material reacts as in a Type I Response. An intense shock occurs; a part of the case is broken into small fragments; a ground crater can be produced, the adjacent metal plates can be damaged as in a Type I Response and there will be blast overpressure damage to nearby structures. A Type II Response can also produce large case fragments as in a violent pressure rupture (brittle fracture). The amount of damage, relative to a Type I Response, depends on the portion of material that detonates.

Type III Response (Explosion).

The third most violent type of explosive event. Ignition and rapid burning of the confined energetic material build up high local pressures leading to violent pressure rupture of the confining structure. Metal cases are fragmented (brittle fracture) into large pieces that are often thrown long distances. The unreacted and/or burning energetic material is also scattered about. Air shocks are produced that can cause damage to nearby structures. Fire and smoke hazards will exist. The blast and high velocity fragments can cause minor ground craters and damage (break-up, tearing, gouging) to adjacent metal plates. Blast pressures are lower than for Type I or Type II Responses.

Type IV Response (Deflagration).

The fourth most violent type of explosive event. Ignition and burning of the confined energetic materials lead to non-violent pressure release as a result of a low strength case or venting through the case walls (outlet gap, initiation capsule, etc). The case may rupture but does not fragment; orifice covers may be expelled and unburnt or burning energetic material may be scattered about and spread the fire. Pressure releases may propel an unsecured test item causing an additional hazard. No blast effect or significant fragmentation damage to the surroundings, only heat and smoke damage from the burning energetic material.

Type V Response (Burning).
The least violent type of explosive event. The energetic material ignites and burns non propulsively. The case may split up non- violently; it may melt or weaken sufficiently to allow slow release of combustion gases; the case covers may be dislodged by the internal pressure.
Debris stays mainly within the area of the fire. This debris is not expected to cause fatal wounds to personnel or be a hazardous fragment beyond 15 m (49 ft).

No Reaction.
A non-explosive event in which there is no externally perceptible reaction of the energetic material to the applied stimulus.

AOP-39 provides guidance on the interpretation of the types of response.

NATO/PFP UNCLASSIFIED
Releasable to Mediterranean Dialogue Nations

31 May 2006

DOCUMENT
PFP(AC/326)D(2006)0005

CNAD AMMUNITION SAFETY GROUP (AC/326)

RATIFICATION DRAFT 1- AOP-39 (EDITION 2)

GUIDANCE ON THE ASSESSMENT AND DEVELOPMENT OF INSENSITIVE MUNITIONS (MURAT)

Note by the Secretary

Reference: PFP(AC/326-SG/3)DS(2006)0001 dated 19 April 2006

1. AOP-39 has been submitted by AC/326 Sub-Group 3 for AC/326 Main Group approval prior to promulgation (see reference).

2. Main Group Members of NATO nations are requested to review the subject AOP and indicate their approval, or otherwise, to the Secretary by 30 November 2006.

(Signed) M-C. Mortier

Action Officer: M-C. Mortier, Ext. 3942
Original: English
G:\Docum\AC326\Main Group\Documents\2006\PFP(AC_326)D(2006)0005 AOP-39Ed2-E.doc

Enclosure
PFP(AC/326)D(2006)0005

ALLIED ORDNANCE PUBLICATION

AOP-39
(Edition 2)

NATO INTERNATIONAL STAFF - DEFENCE INVESTMENT DIVISION

GUIDANCE ON THE ASSESSMENT AND DEVELOPMENT OF INSENSITIVE MUNITIONS (MURAT)

MAY 2006

NORTH ATLANTIC TREATY ORGANIZATION

MILITARY AGENCY FOR STANDARDIZATION (MAS)

NATO LETTER OF PROMULGATION

May 2006

1. AOP-39 (Edition 2) - GUIDANCE ON THE ASSESSMENT AND DEVELOPMENT OF INSENSITIVE MUNITIONS (MURAT) is a NATO/PfP UNCLASSIFIED publication. The agreement of NATO nations to use this publication is recorded in STANAG 4439.

2. AOP-39 (Edition 2) is effective upon receipt.

3. AOP-39 (Edition 2) contains only guidance information and is not subject to the ratification procedures.

J. MAJ
Brigradier General, PLAR
Director, NSA

NATION	RESERVATIONS

RECORD OF AMENDMENTS

Change Date	Date entered	Effective Date	By Whom Entered

TABLE OF CONTENTS

Page

NATO LETTER OF PROMULGATION II

RECORD OF AMENDMENTS IV

TABLE OF CONTENTS V

1. INTRODUCTION 1

2. AIM 1

3. SCOPE 1

4. DEFINITIONS 1

5. METHODOLOGY OF IM ASSESSMENT 1

5.1 General 1
5.2 Identifying the Threats 2
5.3 Identifying the Munition Configurations 2
5.4 Assessing the Response of the Munition to the Threats 3
5.5 Generating the IM Signature for Any Particular Configuration 4

6. IM ASSESSMENT INFORMATION AND REPORT 4

7. IM DESIGN AND DEVELOPMENT 4

ANNEXES

A. DEFINITIONS A-1
B. APPLICATION OF THE HAZARD PROTOCOLS B-1
C. ASSESSMENT OF FAST/SLOW HEATING C-1
D. ASSESSMENT OF BULLET/FRAGMENT IMPACT D-1
E. ASSESSMENT OF SYMPATHETIC REACTION E-1
F. ASSESSMENT OF SHAPED CHARGE JET IMPACT F-1
G. FULL SCALE TEST PROCEDURES G-1
H. CONDUCT AND REPORTING OF FULL SCALE TESTS H-1
I INTERPRETATION OF MUNITION RESPONSES I-1
J. PRESENTING THE IM SIGNATURE J-1
K. IM ASSESSMENT REPORT K-1
L. IM DESIGN TECHNIQUES L-1

1. INTRODUCTION

1.1 Technological advances in the design of explosive ordnance are making possible the development of a range of munitions termed Insensitive Munitions (IM) or Munitions à Risques Atténués (MURAT) which are less dangerous than previous weapons when subjected to accidental and combat stimuli. Such munitions remain effective in their intended application, and are less sensitive than their predecessors to extreme but credible environments such as heat, shock or impact.

1.2 Introduction of IM into service is intended to enhance the survivability of logistic and tactical combat systems, minimise the risk of injury to personnel, and provide more cost effective and efficient transport, storage, and handling of munitions.

2. AIM

2.1 The aim of this AOP is to provide guidance on implementing the policy and requirements specified in STANAG 4439.

3. SCOPE

3.1 This AOP gives guidance on:

- The methodology for carrying out an IM assessment.
- The design techniques for developing an IM.
- The reporting of the IM assessment.

3.2 The guidance contained in this document can be applied to all non-nuclear munitions, either at the earliest stage of design, newly developed, product improved, replenishment purchased, or older designs still in service, during all phases of life, from manufacture to target or disposal.

3.3 The IM assessment is complimentary to a comprehensive assessment of safety and suitability for service in accordance with STANAG 4297 and AOP-15, and Hazard Classifications in accordance with the STANAG 4123.

4. DEFINITIONS

4.1 Annex A provides a list of definitions specific to this AOP.

5. METHODOLOGY OF IM ASSESSMENT

5.1 General

5.1.1 The IM assessment is a process that evaluates how a munition will likely respond to the IM threats specified in STANAG 4439 and whether it complies with the IM requirements.

5.1.2 The IM assessment consists of:

- Identifying the threats
- Identifying the munition configurations
- Assessing the response of the munition to the threats
- Generating the IM signature for any particular configuration

5.1.3 There are benefits when preparing IM assessment plans in coordinating the testing requirements with those for other assessments including those conducted for hazard classification in accordance with STANAG 4123,

system vulnerability, and those identified as a result of applying the safety assessment process described in AOP-15. When testing is intended to serve multiple purposes and satisfy multiple requirements, the test plans should be coordinated with all appropriate authorities.

5.2 Identifying the Threats

5.2.1 STANAG 4439 defines a number of threats to which a munition is likely to be exposed during its life cycle. Some of these threats are common to all munitions; others arise because of exposure of the munition to a specific operational or logistic environment.

5.2.2 In order to help interoperability and facilitate modification of life cycle, it is recommended that the IM assessment covers an internationally agreed baseline range for each threat as defined in Table 1 below.

Table 1: Threat and Baseline Threat Range

THREAT	REQUIREMENT	BASELINE THREAT RANGE
Magazine/store fire or aircraft/vehicle fuel fire (Fast Heating)	No response more severe than Type V (Burning)	Average temperature between 550ºC and 850ºC until all munitions reactions completed. 550ºC reached within 30s from ignition.
Fire in an adjacent magazine, store or vehicle (Slow Heating)	No response more severe than Type V (Burning)	Between 1ºC and 30ºC per hour heating rate from ambient temperature.
Small arms attack (Bullet Impact)	No response more severe than Type V (Burning)	From one to three 12,7mm AP round, velocity from 400 m/s to 850m/s.
Fragmenting munitions attack (Fragment Impact)	No response more severe than Type V (Burning)	Steel fragment from 15 g with velocity up to 2600m/s and 65 g with velocity up to 2200m/s.
Shaped charge weapon attack (Shaped Charge Jet Impact)	No response more severe than Type III (Explosion)	Shaped charge caliber up to 85 mm.
Most severe reaction of same munition in magazine, store, aircraft or vehicle (Sympathetic Reaction)	No propagation of reaction more severe than Type III (Explosion)	Detonation of donor in appropriate configuration.

Note: The threats recommended for Hazard Classification purpose are in the ranges defined in Table 1.

5.2.3 Analysis of the life cycle may identify credible threats that are either additional to those selected in STANAG 4439 or which are outside the range specified in Table 1.

5.2.4 Conversely, analysis of the life cycle may identify situations where the threat ranges in Table 1 are not credible, and could be reduced or discounted.

5.2.5 In both cases the rationale behind any variation must be justified.

5.3 Identifying the Munition Configurations

5.3.1 A munition can be found in many different configurations (transport, tactical, operational, fuzed, unfuzed…) throughout its life cycle. Persons directly involved with the munition should be consulted so that information on how

the munition will be used, handled and operated throughout its service life and what will be its duration in that situation can be incorporated into each of the munition situations that have been previously defined.

5.3.2 The nature of information that is needed and the appropriate stakeholders who should be consulted for establishing the life cycle profile and determining the associated configurations is shown in Table 2.

Table 2: Stakeholder and situation information

STAKEHOLDER	INFORMATION
Operational User	Details on the munition's role, tactical use and deployment
Logistician	Details on re-supply, manner of storage and transportation of the munition
Safety Authority	Details of safety regulations that could affect, handling, storage, transportation and deployment of the munition
In Service Manager	Details on munition inspection, maintenance cycle, disposal and carriage on weapon platforms
Design Authority	Details on the munition configuration, dimensions, packaging and explosive components.

5.3.3 If it is not feasible to assess all configurations in detail, the most pertinent configurations should be identified based on:

- The amount of its life spent in those configurations.
- The probability of being exposed to a specific threat in those configurations.
- The consequences to the surroundings of any reaction in those configurations.
- The configuration guidance provided in the test STANAGs.

5.4 Assessing the Response of the Munition to the Threats

5.4.1 To assess the response/reaction level for each configuration of interest, the following factors should be considered:

a. Type and magnitude of the stimulus associated with the threat range.
b. Explosiveness and sensitiveness of the energetic materials (EMs) used in the munition.
c. Design of the munition.
d. Component interactions.
e. Selected Configuration.

5.4.2 Information that can be used to perform this assessment includes but may not be limited to:

a. Read across from similar designs.
b. Modelling and analysis.
c. Energetic materials characterisation.
d. Laboratory scale test results.
e. Small scale and component level test results.
f. Full scale test results.

5.4.3 The process for determining the response level to each of the IM threats may be based on the hazard assessment protocols. Compared to AUR testing in isolation, use of the protocols can increase the level of confidence and range of validity of the IM assessment.

5.4.4 Protocols are ordered procedures described by a flow chart, through which modelling, small scale testing, generic testing, data on similar munitions or munitions using the same or similar EM and expert analysis can be used. Confidence in the validity of the result is directly linked to the level of detail provided. The protocols may be used in an iterative manner to establish the sensitivity of the assessment to variations in threat stimulus level, EM formulation, munition design, packaging and storage /transport configuration. Guidance on the application of protocols is given at Annex B. Protocols developed by The Technical Cooperation Program (TTCP) nations during

the early 90's and NIMIC nations during the mid 90's for each of the IM threats are at Annexes C-F. These protocols are neither exhaustive nor exclusive, and users of the protocols should seek to use the most up to date and well validated tools available to them.

5.4.5 If it is not possible to use the protocols or other methodologies such as a risk-based methodology, the minimum requirement for assessing the response of a munition to a hazard stimulus is full-scale testing in accordance with the appropriate STANAGs (Annex G). Guidance on the conduct and reporting of full scale tests is provided in Annex H. Guidance on the interpretation of results is provided in Annex I.

5.5 Generating the IM Signature for Any Particular Configuration

5.5.1 The IM signature is a summary of the responses of a specific configuration of a munition to all of the IM threats. A munition may have several IM signatures representing various configurations within multiple life cycles. Each signature is a snapshot of the results of the IM assessment.

5.5.2 From the different IM signatures corresponding to the worst credible life cycle configuration identified for each considered threat, it is possible to define the IM compliance signature. For this particular signature, the relevant configurations and threats have to be clearly reported.

5.5.3 Methods of presenting IM signatures are provided in Annex J

6. IM ASSESSMENT INFORMATION AND REPORT

6.1 The result of the IM assessment, including supporting information such as explosive characterisation testing, sub-scale generic testing, modelling, read across from other weapons, threat assessment, expert analysis and full scale testing, needs to be collated and provided by the Nation developing the munition in accordance with the statement of agreement in STANAG 4439.

6.2 Together with justification where appropriate, the IM Assessment report shall include:

a. An executive summary
b. Munition system information.
c. The assessed configuration(s) and the threat ranges
d. The supporting information.
e. The IM signature (s)

6.3 It is recommended that at least the executive summary includes as much detail as possible to be releasable to a requesting nation upon receipt of a request through appropriate national channels.

6.4 Guidance on the structure and content of the IM assessment report is given in Annex K.

7. IM DESIGN AND DEVELOPMENT

7.1 IM should be considered at the earliest stages of system design and development. In order to reduce the risk that the IM requirements will not be met, the design of the munition needs to include appropriate EMs and/or to make use of applicable IM design techniques. The hazard assessment protocols can be used during the development of a munition to anticipate potential hazards, identify design solutions and help mitigate hazards of existing munitions

7.2 Application of IM design techniques is needed whether the munition is a new development, a product improvement, or a replenishment item. It is important that such techniques are addressed collectively through a systems design approach, rather than being applied in isolation.

7.3 There are a number of possible techniques which might be used. Further guidance on IM design is given in Annex L.

DEFINITIONS

1. **Explosiveness**
A measure of the explosive response to a given stimulus in a defined system. It is dependent not only on the explosive, but also on the mass, physical state, configuration and confinement (NATO AC/326 AOP-38 edition 3).

2. **IM Assessment**
A process to determine the compliance of a munition with the IM requirements (STANAG 4439 edition 2).

3. **IM Signature**
A representation of the IM level of the munition, i.e. the response level of the munition to the IM threats (STANAG 4439 edition 2)

4. **Insensitive Munitions (IM) or Munitions à Risques Attenués (MURAT)**
Munitions which reliably fulfill their performance, readiness and operational requirements on demand and which minimize the probability of inadvertent initiation and severity of subsequent collateral damage to weapon platforms, logistic systems and personnel when subjected to selected accidental and combat threats (STANAG 4439 edition 2).

5. **Munition Response**
The result (such as blast, overpressure, fragment spray and heat) produced by a munition as a consequence of stimuli generated by a threat or combination of threats.

6. **Munitions Threat Analysis (MTA)**
The identification and analysis of the specific threats that a munition may face during its life cycle.

7. **Protocol**
An ordered procedure in the form of a flow chart directing the user through the evaluation of a hazard area.

8. **Sensitiveness**
The probability or a measure of the ease of being initiated by a specified stimulus (NATO AC/326 AOP-38 edition 3).

9. **Stimulus**
The applied energy or power such as current, voltage, mechanical impact, friction, or any other physical phenomenon such as (rate of) change of current, or pressure, which is capable of initiating directly or indirectly an explosive event. (NATO AC/326 AOP-38 edition 3).

10. **Threat**
A condition that is a prerequisite to a mishap. Any phenomenon –environmental force or intrinsic effect- having the potential to induce an adverse effect in the munition compromising its safety or its suitability for service. It is characterized by its nature, severity or probability of occurrence (NATO AC/326 AOP-38 edition 3).

APPLICATION OF HAZARD PROTOCOLS

Overview

1. Full scale testing involves small statistical samples that may not provide adequate confidence in the likely response of a munition. To address the problems of full scale testing, and to increase confidence in IM assessments, a detailed understanding of the reactive behaviour of energetic materials is required along with an understanding of their interaction with hazard stimuli in conjunction with hardware characteristics and full-scale configurations is needed. The evidence required to support response predictions can be determined by analyzing the initiation and reaction mechanisms that the various stimuli are known to induce in the energetic materials.

2. A hazard assessment protocol is an ordered procedure that results in a flow chart directing the user through the evaluation of a hazard area. Once a threat stimulus has been identified and quantified, hazard protocols identify the response "paths" that this stimulus is likely to instigate and must, therefore be considered, and also the information required in order to perform an assessment of the hazard. Since such an assessment is based on a logical process and is conducted for a munition in a real environment, subject to real threats, it will have more value than the results of a small number of go/no-go full-scale hazard tests.

3. Each protocol consists of a decision tree flow chart that examines the science of successive events in the hazard/munition interaction. In this way, it characterises the sitmulus, then its interaction with the munition, and finally the response of the munition. Each box (decision point) in the flow chart identifies the information required, and in what order, to make a decision and follow the process to the next box. In the simplest terms, then, a hazard assessment protocol is nothing more than an orderly process for viewing the hazard areas, and defining what information is needed to assess the response of munitions to those hazards.

Context

4. Traditional methods of hazard analysis depend on standard go/no-go or pass/fail tests, and the experience and judgment of cognisant individuals. Inevitably, this approach places emphasis on large scale tests of major components or the full-scale munition. Such large scale tests have several disadvantages. They contribute very little to the understanding of the fundamental mechanisms occurring in each hazardous situation. They are extremely costly and hence only a few are undertaken. Interpretation of their results is complicated by the problems associated with the statistical probability of an inadvertent reaction with the small number of tests which are conducted. The test design is for a “pass”, with the response giving no indication of how far the stimulus is from conditions that could induce a very different response. There is no guarantee that you will see all the possible response mechanisms.

5. Limiting the assessment process to some standard pass/fail test may reduce time and costs, but there is no guarantee that the test represents the range of munition + environment + stimuli that the munition is likely to see. There is little mechanistic understanding involved that would allow the response of the munition to some other combination of environment and stimuli to be predicted (in terms of both initiation and output). The probabilistic nature of hazard occurrence is an issue. For example, if the probability of seeing an explosion is one in a thousand, the probability of seeing an explosion in two tests is 0.02% In fact it would take 2,944 tests to be 95% certain of seeing one explosion. So while pass/fail tests are appealing in a simplistic sense – it either passed or failed – they do not provide a useful predictive capability, or a worthwhile degree of assurance to National Authorities that their results represent the true IM level of a munition. Confidence can be increased by using other methods.

6. A need for some large scale tests will probably always exist; to confirm the reaction level prediction or where no better techniques exist. However, in developing this methodology it is anticipated that substantial munition design and development and assessment can occur based on the results of laboratory and small scale tests, theoretical analyses and numerical modeling. Significantly fewer full-scale tests will be required for confirmation of the methodology's predictions.

Background

7. The Technical Cooperation Program (TTCP) Conventional Weapons Action Group 11 (WAG-11) was formed in a climate where it was felt by the international community of technical experts that the mechanistic understanding of the phenomena involved in energetic materials hazard assessment had advanced to the point where a science based methodology was possible. The detailed protocols presented here are primarily the output of the WAG-11 programme that ran from 1987 to 1994.

8. From the beginning, it was recognized that in outlining such a methodology, in addition to the benefits described above, areas of technical deficiency would be clearly identified for future research, and that the protocols would need to be continually updated as new knowledge emerged. They were passed to the NATO Munitions Safety Information and Analysis Center (MSIAC, formerly NIMIC) in 1995, and this organization has continued to update and extend their scope and relevance, holding a series of workshops to tap the collective expertise of the international technical community. The simplified protocols and lists of relevant tests and techniques are largely the product of these workshops.

Using Hazard Protocols

9. The protocol process is a decision logic flow which allows for the assessment of a hazard scenario. It is determined and expressed in a decision tree format. The process asks questions and directs certain actions be undertaken depending on the answers to these questions, thus determining the path through the decision tree format. The flowchart identifies the information required and the order in which it is needed. Indirectly, it also identifies information that is not needed.

10. The methodology described here is based on decision tree protocols where physically important characteristics are required to answer mechanistically based questions relating the causes of energetic materials reactions to the severity of such reactions.

11. Having the hazard protocols, the objective is to know what will happen when a munition or component is subjected to fire, projectile impact or some other stimulus. To determine the response of the munition a description of the munition and its environment as well as a description of the stimulus is required. This can be written as:

$$\text{munition} + \text{environment} + \text{stimulus} \rightarrow \text{response}$$

12. When dealing with munitions, filled with energetic materials, responses can vary from no reaction to detonation. To have a complete description, the time at which the energetic material starts to react is required. Thus the response must be described as

(1) when the material starts to react, and
(2) what is the output, or violence of the reaction. Both are important and highly coupled.

For example, in some thermal environments if the energetic material reacts quickly (e.g. at some low temperature) the reaction violence may not be as severe as if the reaction initiated at some later time (and therefore higher temperature). The protocol methodology puts this question and answer process in a logical and systematic flow.

13. Both simplified and detailed protocols have been developed for Fast/Slow Heating, Bullet/Fragment Impact, Shaped Charge Jet Impact and Sympathetic Reaction. The simplified protocols are an introduction to the individual hazard areas, and provide an overview of the mechanistic considerations particular to each hazard. The detailed protocols present a comprehensive view of the mechanisms and how they are coupled together, along with a discussion of the underpinning science.

14. The protocols are accompanied by tables providing examples of tests and techniques that can be used to answer the questions posed in the decision tree. These tables are neither exhaustive nor exclusive, and users of the protocols should seek to use the most up to date and well validated tools available to them. Examples of tools and techniques that can be used are:

- Read across from similar designs.
- Modelling and analysis.
- Energetic materials characterisation.
- Laboratory scale test results.
- Small scale and component level test results.
- Full scale test results.

15. Although some flowcharts are long and quite complex, a specific application of a specific hazard scenario generally only uses a small segment of the complete protocol. The level of detail needed for an assessment may be related to the stage of the munition project, and either the simplified or detailed protocols may be appropriate, or some combination or modification of either. For example, at the earliest stages of a munition's design a simplified protocol may be sufficient to reveal the benefits of using a low explosiveness, DDT resistant main charge explosive, whereas a detailed protocol may be required to determine the likely reaction of a complex rocket motor using one or more mitigation devices. In any case, when an assessment is made the protocol used to make it should be documented.

(a) Notes on the Protocols

- The response(s) of a munition to a stimulus may be determined using the decision process outlined in the appropriate protocol.
- Any suitable method may be used to answer the necessary questions, but the method and data used, together with confidence in the decision should be recorded.
- All behaviour should be predicted allowing for the range of temperatures, pressures and dynamic conditions that may apply.
- The potential reactions of all of the energetic materials in the munition must be considered.
- The level of detail used should be appropriate for the stage of the munition development and for the complexity of that munition.
- The response(s) determined from the decision process give the NATO response descriptor for the munition on the basis of the EM behaviour in the munition configuration. The potential hazard from the response must be determined from knowledge of the amount and type of EM reacting, its rate of reaction, and the munition design.
- The tables accompanying each protocol give an indication of the type of evidence that should be provided to support an IM assessment.
- The protocols may be used in an iterative manner to establish the sensitivity of the assessment to variations in threat stimulus level, energetic material formulation, munition design, and packaging/storage configuration.

- The protocols may be used to evaluate the effects of time and temperature on the response of the munition. For example, the toughness of a cast cured PBX will change in the period before it is fully cured, and may change further as it ages. This may lead to a change in the response of the explosive to some or all of the IM stimuli.
- Managers of projects and programmes can use the protocols throughout the program to determine what design issues need to be addressed.
- Munitions designers can use the protocols as a tool to select appropriate materials and design features.
- Technology leaders can identify what technologies are important in the development of insensitive munitions.
- Technical specialists can show potential sponsors where their work fits in and why it is needed.
- Review Boards and National Authorities can use the protocols as a matrix to assure themselves that all relevant factors have been considered.

ASSESSMENT OF FAST/SLOW HEATING

Overview

1. Heat is a significant threat to munitions in general and represents a real hazard to energetic materials. Under some conditions a very rapid release of chemical energy can result in deflagration, thermal explosion or detonation of a munition.

2. While a very wide range of thermal environments are possible in hazard situations, in general these are simplified to two generic categories that are broadly representative of the extremes:

a. Fast Heating – Representing a munition completely engulfed in a hydrocarbon fuel fire such as that resulting from an aircraft crash on a ship or road transport accident. Typically fast heating is represented by fires with temperatures exceeding 800°C lasting up to twenty minutes. This scenario is also known as Fast Cook-Off.

b. Slow Heating – Representing heating of a munition by a remote heat source such as a fire in an adjacent compartment or building. Typically slow heating is described by a constant heating rate of 3.3°C/hour until the munition reacts. This scenario is also known as Slow Cook-Off.

3. The science of fast and slow heating is the same, as are the mechanisms that have to be considered, so a single protocol – either simplified or detailed - serves for both extremes and any intermediate heating condition that may be encountered. The simplified and detailed protocols are given at Figures C-1 and C-2.

4. Table C-1 identifies tests and tools that are pertinent to each of the decision points in the protocols and the materials properties required to assist in the modelling or prediction of the results of such tests. Table C-2 gives examples of tests that can be used to determine values for the properties identified in Table C-1. These tables are neither exhaustive nor exclusive, and users of the protocols should seek to use the most up to date and well validated tools available to them.

The Simplified Fast/Slow Heating Hazard Protocol

5. The simplified protocol in Figure C-1 presents the hazard assessment protocol logic in a form that captures the overall response mechanisms. It combines the individual steps assuming that, given certain conditions, the overall mechanism will determine the response.

6. When applying the simplified protocol, the following should be considered:

a. The time to reaction should be modelled allowing for the insulating effects of any packaging around the munition being assessed.

b. De-confinement in this context relates to weakening of the munition case materials (due to combustion, melting, softening and/or thermal expansion) so that EM/liner pyrolysis or combustion products can vent at or close to atmospheric pressure.

c. The possibility of movement of the EM subsequent to melting or softening and pressure induced flow should be considered.

d. The assessment of the mode of burning of the EM should be made across the appropriate pressure and temperature ranges. In this context, normal surface regression implies that there is not convective burning and no available burning surface due to cracking or pyrolysis of the EM.

e. If EM combustion products are expected to vent through holes or cracks in otherwise intact munition cases, the possibility for propulsion must be considered. Potential thrust can be predicted using suitable propulsion codes together with the burning parameters of the EM's potential burning surface and vent areas.

f. Assessment of whether a deflagration to detonation transition (DDT) is possible should be made using EM in the worst state that may be expected within the munition being assessed (purity, porosity, temperature and initial pressure).

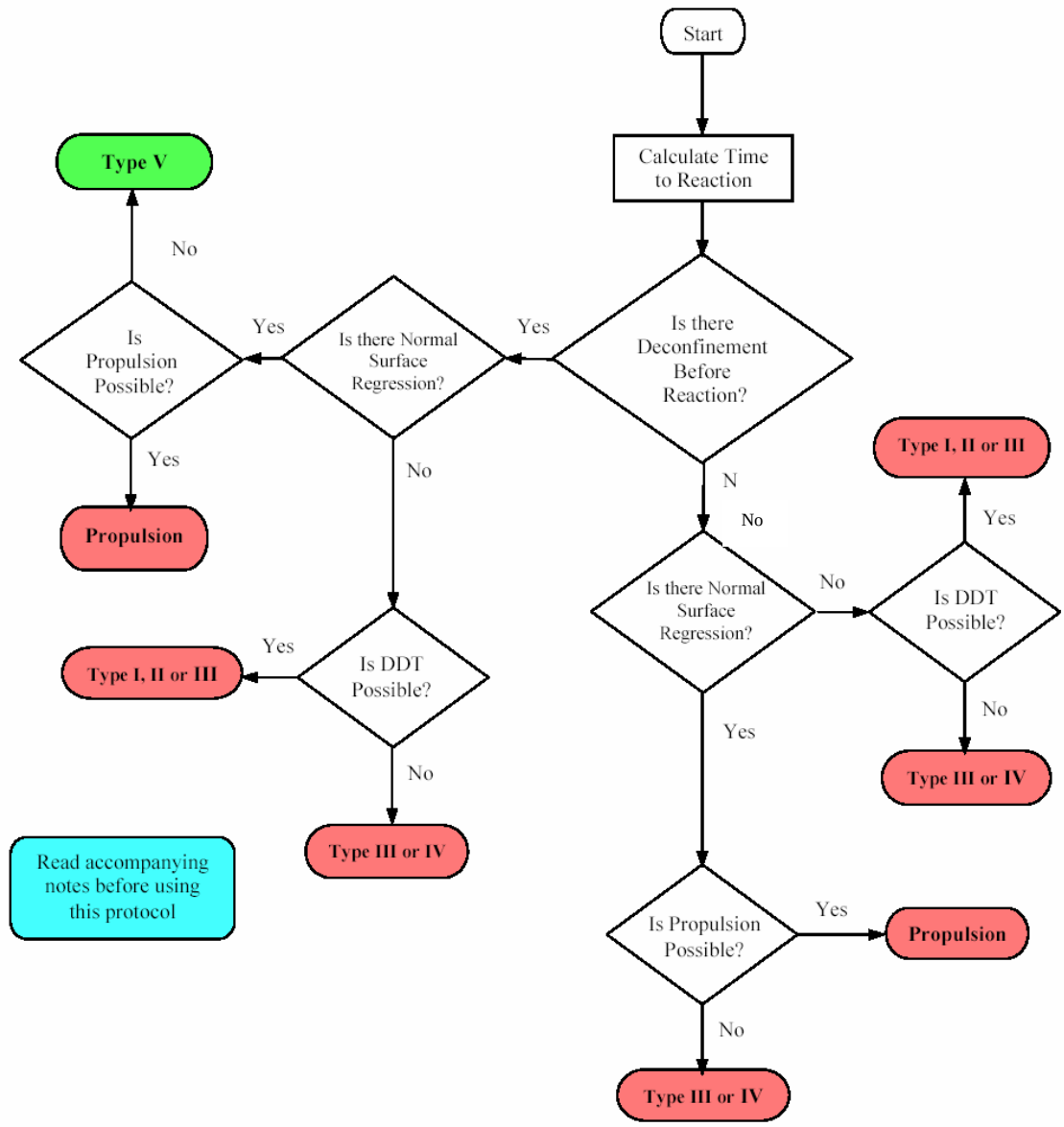

Figure C-1 Simplified Hazard Protocol – Fast/Slow Heating

The Detailed Fast/Slow Heating Hazard Protocol

7. The detailed protocol in Figure C-2 considers each step in the sequence of events leading to some response, and examines the details of each mechanism. It contains seven major portions. These are:

1. Initial thermo-chemical system description
2. Thermo-chemical/thermo-mechanical system description and their response following new boundary conditions (i.e. time steps and thermal variation.)
3. Self sustained exothermic reaction.
4. Evaluation of burn criteria with the possibility of thermal explosion.
5. Evaluation of the confinement and its effect on the reaction.
6. Evaluation of the status of the energetic material.
7. Change in the thermal loading and its effect on the system.

8. A technical description of the protocol is given for each box according to the number indicated in Figure C-2:

Box 1: Initial Thermal System Description

B1.1 Weapons can be damaged by thermal stimuli. In order to adequately evaluate the response of a munition to a specific thermal threat, one needs to define the necessary initial input parameters. For many systems, a large amount of data is needed to have a predictive capability. These input conditions include:

a. Weapons geometry - complete with case dimensions, thickness, insulating materials, liners, stress release systems etc.

b. Chemical and mechanical properties of all components, ie heat capacity, conductivity, density, thermal expansion, modulus, elastic modulus, yield strength, phase changes, temperature and pressure dependent kinetics of energetic materials, burst pressure of each case (system specific) and rate dependent kinetics - spanning multi-step Arrhenius kinetics for specific formulations, all as a function of temperature. The initial input parameters must be sufficient to describe all subsequent modified thermal profiles of the system. Data is not only required at T but also as a function of temperature (i.e. T). Such data includes thermo-mechanical/ thermo-chemical changes, case rupture etc.

c. Initial temperature profile, especially in the energetic materials. As fairly high temperatures would be achieved, a thermo-chemical description of all energetic materials present is required. For example, an investigation could include the propellant (rocket or gun propellant) and its ignition system, as welt as the explosives in the warhead, and its initiating components. Basic data required for such evaluations will include chemical descriptions of all energetic material components in the high temperature conditions identified Temperature and pressure- dependent decomposition kinetics and energetics of these materials are still being developed. This is an area where a significant effort is required to setup a valuable database.

d. Description of the target - size, geometry, components, and confinement (including self-confinement) needs to be considered.

B1.2 In addition to the data mentioned as the initial thermal/mechanical system description, other information, such as these arising from the following questions, are required:

- What are the materials used?
- What are the components with EM's?
- What mitigation devices are included?
- Where is the system? Why is the system vulnerable?

- What data do you need to proceed?
- Which other variable do you need to know?

Box 2: Heat Source

B2.1 The description of the head source is obviously a necessary first step, since it is the definition of the stimulus. This description must include:

a. The Energy Source

- If it is a fire, then what is the combustible: fuel, oil, wood, other combustibles?
- If it is indirect heating, is it caused by:
  - An adjacent free fire?
  - A fire in the compartment separated from the target system?
- Other possible energy sources include:
  - Impingement of exhaust from a “huffer”: (aircraft starter blower) or from an adjacent aircraft exhaust
  - Impingement of the exhaust from a rocket motor or torching from a damaged rocket motor or warhead.

b. The Environment

- Is the target in a confined or unconfined space?
- If it is unconfined, is there an air flow across it, either due to wind or the motion of the fire?

c. Situational Aspects

- Are there any aspects of the source situation that need to be considered?

Box 3: System Specifics

B3.1 To make realistic predictions the cook-off protocol must include system specific parameters, both initially and at each time step. For example, the munition (including its storage container or conditions) may impose specific preferential heat flow paths into the energetic material, so that local intense heating sufficient to cause rapid decomposition can result. Alternatively, thermal batteries, boosters, igniters etc, may preferentially ignite, or ignition of a rocket propellant may occur through the nozzle of a rocket motor.

B3.2 Furthermore, after a certain time interval some conditions could have changed significantly and new information, such as these arising from the following questions, would be required:

- Has the overall geometry fundamentally changed?
- Have things come apart, moved or changed position?
- Has something happened that changes the models of heat transfer?
- Which components are now critical?

B3.3 No protocol can address all possible combinations and permutations of munition assemblies. It is, therefore, the assessor’s responsibility to determine if there are any assemblies which could affect the response of a munition.

Box 4: Heat Transfer to the Target System

B4.1 The next step, once the heat source has been thoroughly characterised is to describe how the energy is transferred from the source to the munition, through conduction, convection and/or radiation. This is a necessary, but difficult task, usually done by analysis. The analysis is complicated by many unknown properties and the need to make assumptions. These assumptions often determine the answer and, hence, it is vital that they are clearly stated.

B4.2 The result of the heat transfer analysis is a description of the energy flow to the target and a description of the thermal response of the target. This thermal response is usually described in terms of temperature-time-position profiles in the target munition.

Box 5: Temperature-Time-Position-Profiles

B5.1 If the temperature gradient is very low, not much heat is being transferred into the munition, and if the time is not excessively long, the energetic material remains at some low or modest temperature, and usually no event occurs. This is the desired result, but unfortunately many situations do not yield to these low temperatures.

B5.2 The protocol assumes the worst case, in that heating of the system can eventually lead to a fully sustained exothermic reaction in the energetic material.

B5.3 Fast heating rates, associated with a munition in a fuel fire or subjected to hot exhaust gases or the effects of torching, usually produce steep temperature gradients within the munition causing rapid heat transfer into it and resulting in portions attaining very high temperatures. This is the so-called fast cook-off regime.

B5.4 On the other hand, slow cook-off regimes or heating, which produce low temperature gradients in the weapon but are applied for long periods of time, can bring the bulk of the item to a relatively uniform high temperature, as opposed to the steep gradients characteristic of fast cook-off situations. This slow cook-off regime often produces violent events, because ignition tends to occur within the bulk of the energetic material, the chemical decomposition of which is accelerated by self-confinement by adjacent hot material.

B5.6 Fast cook-off regimes, by contrast, may lead to lower intensity events, because ignition occurs near the case-energetic material interface and the case may fail early. However, it must be noted that, for intermediate heating rates, reaction violence is a function of where initiation occurs.

B5.7 The process for evaluating the response of a munition to cook-off is iterative, requiring several separate reviews of the thermo-mechanical environment during the evolution of the thermal environment until a reaction occurs, or it is clear that it cannot.

Box 6: Thermo-mechanical/Chemical Response

B6.1 On the initial pass through the protocol, the thermo-mechanical/chemical response may be confined to a simple appraisal of the design and its relationship to its surroundings. This should be sufficient to indicate whether the case will be ruptured before there has been any appreciable heat transfer to the interior of the munition. For example, is the case fitted with any thermally initiated mitigation devices? What is the case material? It is fabricated from homogeneous metal, composite/metal/non metal, or composite/non-metal/non-metal? Are there any stress risers etc? On subsequent passes through the protocol, the effects of temperature on the thermo-mechanical properties will need to be taken into account for all energetic and non-energetic materials affected by heat.

B6.2 As fairly high temperatures will be achieved; a thermo-chemical description of all energetic materials present is required. For example, such an investigation would include the propellant (rocket or gun propellant) and its ignition system, in addition to the explosives in the warhead, including its initiating components. The basic data required for such evaluations will include

chemical descriptions of all energetic material components under the high temperature conditions identified. Temperature and pressure-dependent decomposition kinetics and the energetics of these materials is required.

B6.3 The thermo-mechanical description is also required to assist the determination of T = T(x,T) and identify the effects of phase changes and chemical reactions, e.g. pyrolysis. These will give system pressurisation rates, changes of thermal insulation effects etc. In some cases, chemical reactions produce significant changes in the properties of materials, e.g. intumescence as a result of charring. The basic data required for such evaluations will include the heat transfer characteristics of the case and chemical descriptions of all materials used, such as adhesives, insulants, energetics etc. A check must be made to determine whether or not pyrolysis products rupture the case (for example: composite cases, mitigation cases etc).

Box 7: Is There a Self Sustained Degradation?

B7.1 On the initial pass through the protocol, the temperature may be too low to cause any exothermic reactions. On the subsequent passes where time intervals are added, substantial material property changes may have occurred due to the temperature rise. A re-evaluation of the thermo-mechanical/chemical response could indicate that the temperature has increased enough that an exothermic reaction could become possible. Such reactions need to be considered as it could produce self-sustained reactions, particularly when rather slow temperature rises are applied. In the presence of such a reaction, the next step on the path is to check to see if there is a burn. Without a self-sustained reaction, this could indicate the end of the thermal event.

Box 8: Is it the End of the Thermal Event

B8.1 At this point, the protocol user has to ask questions such as:

- Has a steady state (or certainty thereof) been reached?
- Can no reaction be worse than burning, assuming things continue?
- Is everything either going to be consumed or cooled off? As an example, the thermal threat may cease or the temperature could stop increasing before the point of a self-sustained exothermic reaction is achieved.

B8.2 If the end of the thermal event is not indicated, the protocol continues with the next time step. If the end of the thermal threat/event is determined (a yes answer) no new reactive response need be considered. Despite the fact that there is no new response, the user should note that there may be residual damaged materials which could be more sensitive than the initial materials. The system is at a steady state, or cooling condition, and it does not propagate to a runaway reaction without further stimulus.

Box 9: Is There Burning?

B9.1 Ignition is the beginning of every combustion process.

B9.2 On the initial pass through the protocol, the temperature may be too low to cause ignition. On subsequent passes, where time intervals are added, the temperature will increase and an ignition could become possible. The question that needs to be asked is: are there ignition mechanisms other than those from pyrolysis products? The energetic materials may reach their ignition temperature by thermal/chain-thermal branching reactions, or as a result of impinging flames after some damage to the case or its closures.

B9.3 These investigations of ignition must also include system specific considerations. The munition, or its storage container or conditions, may impose specific preferential heat flow paths into the energetic material, so that local intense heating, sufficient to cause rapid decomposition, could result. Alternatively, thermal batteries, boosters, igniters etc may preferentially ignite, or ignition of a rocket propellant may occur through the nozzle of a rocket motor.

B9.4 A pressure burst of the case can occur without a significant reaction of the energetic material. The latter may even ignite later in an unconfined state. However, if the pyrolysis products are able to escape and eventually attain their flash point, this could lead to ignition of the free surface of the energetic material.

B9.5 The process called thermal explosion or self-ignition, takes place at relatively low heating rates. Uniform heating of the sample occurs. Heat accumulation in the system occurs largely due to internal sources. Self-acceleration of chemical reactions after failure of the thermal equilibrium with the ambient medium takes place simultaneously throughout the volume and is of homogeneous explosive nature.

B9.6 A self-sustained exothermic reaction in absence of burning can produce a violent reaction such as a thermal explosion. Such a reaction can even transition to a detonation, referred to as thermal explosion to detonation transition (TEDT). If no thermal explosion occurs, the path goes back to another time step.

B9.7 Where does ignition occur in the interior of the energetic materials? Evidence exists from many experimental/theoretical sources that the location of the ignition point is a direct outcome of the heating rate, system size, geometry, thermo-mechanical properties, and construction. For smaller munitions, slow heating or slow cook-off as defined as a heating rate of 3.3°C/hr applied to the outer surface of the system, may result in central ignition. In general, ignitions occurring within the body of the energetic material have at least some tendency towards self- acceleration due to self-confinement, and ultimately, catastrophic reaction, such as detonation. Indeed, it has been shown experimentally that cook-off of bare charges can, in some instances, lead to detonation.

B9.8 Faster heating rates, such as those experienced when a munition is placed in a fire, usually results in a self-sustained exothermic reaction of the energetic material occurring at or very near the energetic material/case interface. Sometimes the confinement is released before the reaction can build-up to detonation. However, if the confinement is sufficient, this can, and often does, lead to a violent reaction, such as a detonation.

Box 10: Significant Confinement

B10.1 If there exists a self-sustained exothermic reaction with combustion, one needs to determine if the reaction will propagate to a detonation or a lesser violent reaction. This can be evaluated by the degree of confinement the system is subjected to. For example, if the reaction is in the centre of a highly confined bomb, it will likely transition to a detonation.

B10.2 However, if you have a reaction initiating in the centre (near the bore) of a lightly contained composite rocket motor, you may not have Deflagration to Detonation Transition (DDT). A second example occurs if the burst pressure of the case is exceeded, in which case there is not enough confinement to cause a reaction greater than propulsive. It is very important to consider the design of the munition casing. An investigation is required to demonstrate if the case will or will not rupture before appreciable heat transfer has occurred in the munition to reach a temperature high enough to cause some decomposition of the materials, energetic or inert. For example, is the case fitted with any thermally initiated mitigation dev' such as stress risers, composite materials etc? When such devices are present, the case would normally open before a reaction of the energetic materials has built up and a mild reaction is probable. Without thermally initiated mitigation devices, the user has to do a complete thermo-chemical description of all energetic materials.

B10.3 Do pyrolysis products cause rupture? It has been established that pyrolysis products can influence the failure mechanism of munition in fuel fires. If pyrolysis products are generated between the case and energetic material, say from the decomposition of an insulator, and these products are unable to esc a localised increase in pressure will be generated. This pressure may cause the energetic material to be damaged, or it may lead to the rupture of the case. However, if the pyrolysis products are able to escape, and eventually attain their flash point, they could lead to ignition of the free surface of the energetic material. It may be that the pressurisation is the result of effects in something other than the energetic material and a pressure burst of the case could occur without significant energetic material reaction. The latter may even ignite later in an unconfined state.

B10.4 If there is burning without significant confinement then the assessor must determine if the reaction goes propulsive. In the absence of a propulsive event the assessor must answer the question: Is there any EM left? Without a significant quantity of unreacted energetic material, the final result will remain a burn only. However, when there is a separated energetic material charge or a significant quantity of EM left, the protocol continues.

Box 11: Is DDT Possible?

B11.1 A self-sustained exothermic reaction or a burn in the presence of significant confinement could degenerate to a detonation, referred to as a deflagration to detonation transition (DDT). When no DDT can be identified, the protocol user must check to determine if an explosion or a propulsive event is possible prior to investigating the possibility of some energetic material left.

Box 12: Time Increments

B12.1 The selection of time intervals appropriate to the Munition under review will require an appreciation of the mechanical and thermo-mechanical characteristics of the system. This must be reflected in the choice of the time step.

Box 13: Change Thermal Loading

B13.1 Has the thermal loading changed significantly? For example, have new heat sources been introduced either by the weapons subsystems or any adjacent weapons? Has the geometry been changed such that the heat flux to the weapon has changed? Has the insulating barrier been destroyed? "Yes" leads to revaluation of the heat source. "No" leads to a continuing modification of system specifics.

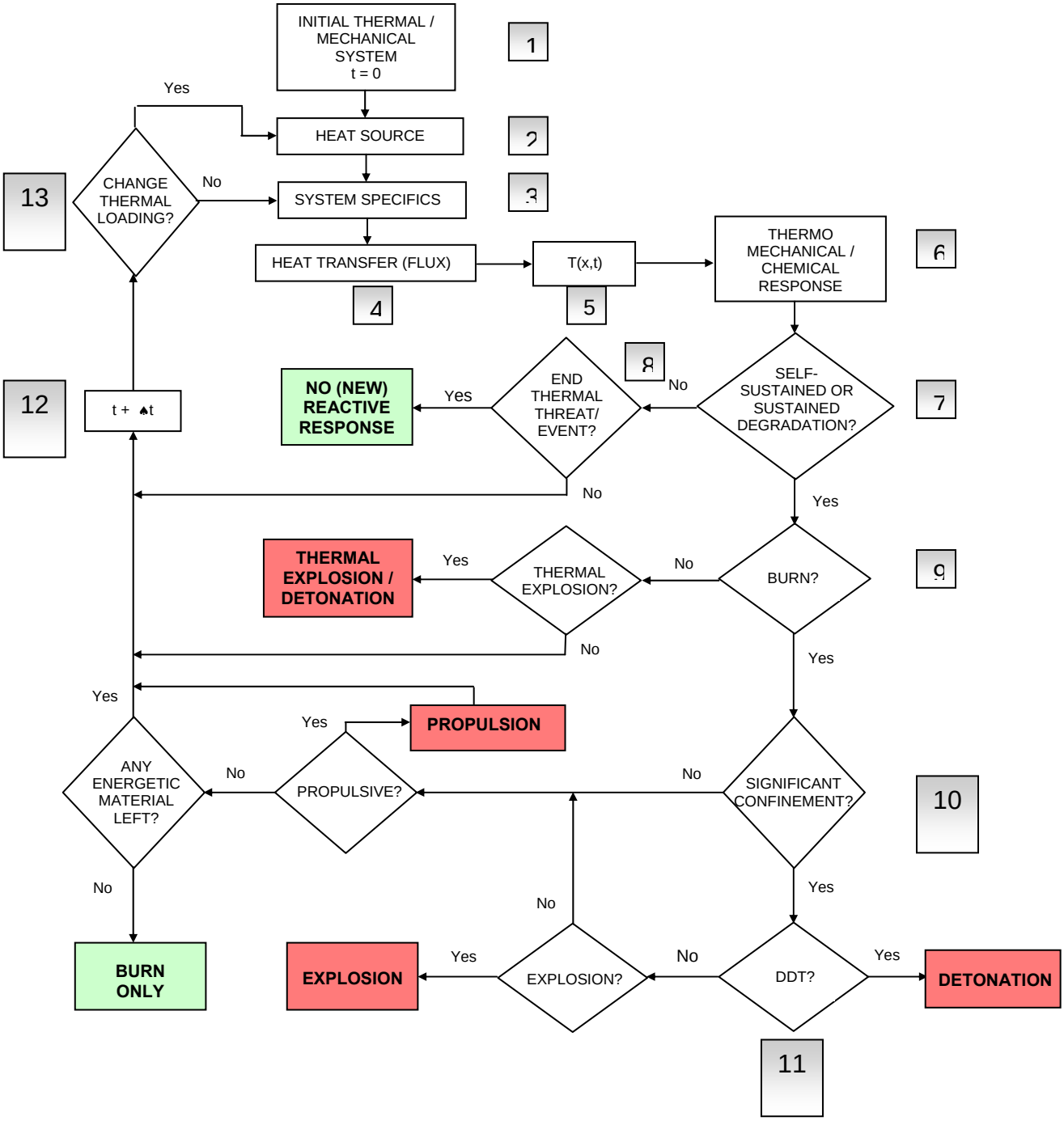

Figure C-2 Detailed Hazard Protocol – Fast/Slow Heating

TABLE C-1 Examples of tools available and data required to analyse fast/slow heating reaction paths

KEY FACTORS/ REACTION MECHANISMS	TOOLS FOR ANALYSIS	PROPERTIES REQUIRED
Time to ignition	TLT Unconfined thermal ignition One Dimensional Time to Explosion (ODTX) Temperature of Ignition Differential Scanning Calorimetry (DSC) Thermogravimetric Analysis (TGA) Accelerated Reaction Calorimetry (ARC) Reactive heat flow models	Kinetics and thermochemistry of EM Decomposition as a function of temperature and pressure Scaling Damage dependency
Effect of Confinement on Energetic Material Reaction	Ignition Temperature Variable Confinement Cook-off Test (VCCT) Tube Test (fast/slow heating versions) Hot Cell Pyrolysis Test	Kinetics and thermochemistry of EM Decomposition as a function of temperature and pressure Mechanical and thermal properties of case, liner and EM
Burning	Closed Bomb (and Variations of) Burn Rate DSC	Mechanical properties Burning rate as a function of temperature and pressure Damage Dependency
Deflagration to Detonation Transition (DDT)	Tube Test, Internal Ignition Version UN Test Series 5 Hybrid Combustion Bomb Closed Vessel Run-to-detonation Distance (of Damaged Material) Critical Diameter Dynamic Case Resistance	Damage dependency Burning rate as a function of temperature and pressure
Violence of Response	dP/dt Information Case fragmentation models	Burning rate as a function of temperature and pressure
Propulsion	Design dependent	

TABLE C-2 .Examples of tests that can be used to generate the data required in Table C-1

PROPERTIES	TESTS TO BE CARRIED OUT	GENERAL POINTS
Porosity	Density Measurements	
Pore Size	Refractive Matching Fluid Atomic Force Microscopy Scanning Electron Microscopy (SEM)	
Particle Size	AOP-7 test category 102-02-xxx Microsonic Techniques	
Crystal Quality	SEM Microscopical Techniques X-ray Diffraction Density measurement test	
Burn Rate	Strand Burner Closed Bomb Hybrid Combustion Bomb	Required as a function of temperature and pressure
Burn Rate (Damaged Material)	Strand Burner Closed Bomb Hybrid Combustion Bomb	Not measured routinely Highly dependent on damage characteristics - (Thermal or Mechanical)
Friability: propensity to fracture/damage	Shotgun Test (Friability Test) Bullet Damage Test Hopkinson Bar Failure Modulus Taylor Impact Test Fracture Toughness	
Damage Characterisation	Sectioning Microscopy X-ray Tomography Closed Bomb (Surface Area) Neutron and X-ray Diffraction Coefficient of Thermal Expansion	Fractures Porosity Dewetting Chemistry
Constitutive Properties and Related Tests	DMA (TG, Modulus, Elastic Properties) Uniaxial Tensile/Compressive Testing (Low Strain Rates) Servohydraulic Mechanical Test (at Rates up to 10^4/s Hopkinson Bar (at Rates up to 10^4/s) Parallel/Oblique Tests or Combined Pressure Shear (at Rates up to 10^6/s) Flyer Plate Impact Test (at Rates up to 10^6/s) (uniaxial	Stress is a function of strain, strain rate, temperature and pressure

PROPERTIES	TESTS TO BE CARRIED OUT	GENERAL POINTS
	strain).	
Chemistry	Tests to determine Arrhenius kinetics (low pressure decomposition) DSC Mass spectroscopy Adiabatic bomb calorimeter ODTX	Fast decomposition (μs) Slow decomposition (min) Very slow decomposition (Ageing) Arrhenius kinetics Activation energy Heat of reaction Parameters for chemical purposes Thermal expansion Compatibility issues in environment of IM tests
Bond Strength	AOP-7 test series	
System Properties		Geometry and physical size Loading density External confinement Gas tightness Free volume Casing type

ASSESSMENT OF BULLET/FRAGMENT IMPACT

Overview

1. Reaction of a munition to the bullet/fragment impact stimulus occurs because there is either direct shock initiation or ignition of damaged energetic material as the bullet passes through or lodges in the material.

2. While a very wide range of bullet and fragment impact scenarios are possible in hazard situations, typically they are represented by:

a. Bullet Impact - a 12.7mm AP bullet impacting at 850±20ms^{-1}.

b. Fragment Impact - a single 18.6 g steel fragment with a right-circular cylindrical body and a conical nose.

3. The principal factors affecting the response to such a stimulus are its shock sensitivity under confined conditions (Shock to Detonation Transition or SDT), the degree of confinement of the energetic material, the level of energetic material damage, the propensity for the energetic material to undergo deflagration to detonation transition (DDT), and the likelihood of transition to detonation resulting from a compression, release, recompression process as the result of a single initial stimulus (XDT).

4. The Bullet/Fragment Impact protocol is based on the idea that a munition will face a hierarchy of hazards when impacted by a bullet or fragment. The initial hazard, the shock generated during impact of the fragment or bullet on the munition, may lead to a prompt (and severe) response if shock criteria are satisfied. If not, then the munition may undergo a delayed response caused by interactions between the munition case and the energetic material. The protocol leads the user through this series of potential hazards and probable outcomes.

5. The science of bullet and fragment impact the same, as are the mechanisms that have to be considered, so a single protocol – either simplified or detailed - serves for both extremes and any intermediate condition that may be encountered. The simplified and detailed protocols are given at Figures D-1 and D-2.

6. Table D-1 identifies tests and tools that are pertinent to each of the decision points in the protocols and the materials properties required to assist in the modelling or prediction of the results of such tests. Table D-2 gives examples of tests that can be used to determine values for the properties identified in Table D-1. These tables are neither exhaustive nor exclusive, and users of the protocols should seek to use the most up to date and well validated tools available to them.

The Simplified Bullet/Fragment Impact Hazard Protocol

7. The simplified protocol in Figure D-1 presents the hazard assessment protocol logic in a form that captures the overall response mechanisms. It combines the individual steps assuming that, given certain conditions, the overall mechanism will determine the response.

8. When applying the simplified protocol, the following should be considered:

a. The possibility of impacting bare EM must be considered when either there is separation between the case wall and the EM or where there is a central bore.

b. In this context, "Layered burning of EM" refers to the possibility of rapidly accelerating convective burning occurring at any time during the combustion of the impact damaged and confined EM.

c. In lightly damaged hardware with a small vent area, the possibility of a well behaved burning response of the EM generating sufficient pressure to violently burst its confinement must be considered.

d. If EM combustion products are expected to vent through holes or cracks in otherwise intact munition cases, the possibility for Propulsion must be considered. Potential thrust can be predicted using suitable propulsion codes together with the burning parameters of the EM's potential burning surface and vent areas.

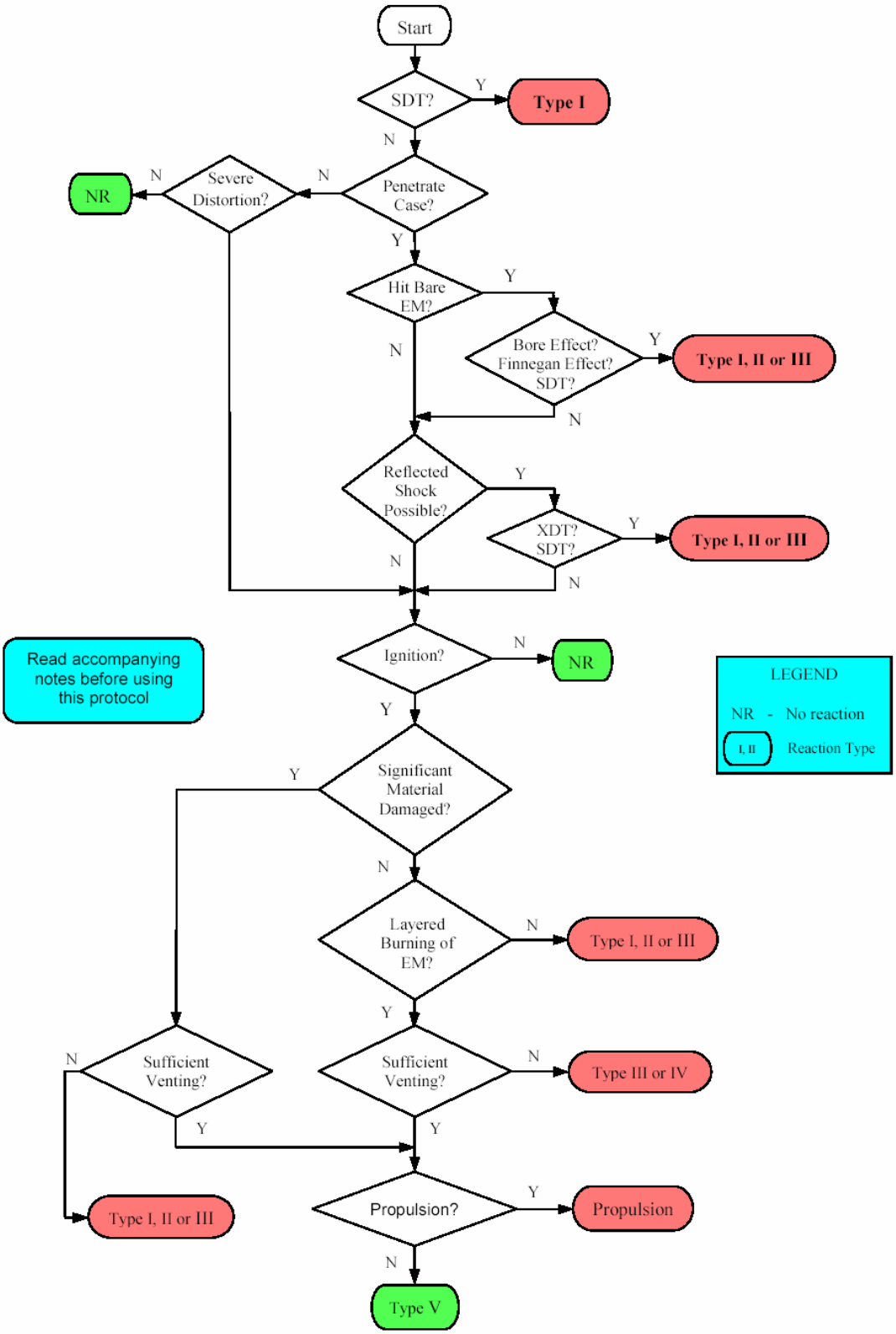

Figure D-1 Simplified Hazard Protocol – Bullet/Fragment Impact

The Detailed Bullet/Fragment Impact Hazard Protocol

9. The detailed protocol in Figure D-2 considers each step in the sequence of events leading to some response, and examines the details of each mechanism. The general philosophy behind the protocol is that there is a hierarchy of hazards faced by a munition impacted by a bullet or fragment.

10. The first hazard is the shock generated on impact. If it is transmitted to the charge, and shock criteria are satisfied, the response is prompt and, in most instances, severe. Failure to shock initiate the charge then leads to the possibility of a delayed response caused by the interaction of the case and/or projectile with the energetic material. The main interaction is a mechanical working of the energetic material by a rapidly distorting case, or by the penetration of the projectile. A lesser hazard under these circumstances appears to be the conduction of heat from fragment or case to the charge. The level of response to the charge distortion can vary from a mild burn to a severe explosion, depending on a number of variables which will be discussed more fully in the following notes.

11. For multiple fragments or bullets (with sequential rather than simultaneous impacts) it is possible that the first impact will not cause a severe reaction, but create sufficient damage to ensure that subsequent impacts will obtain a different response. Under these circumstances it is necessary to take account of the cumulative damage to the munition when attempting to predict the response to the next impact. Again these factors are discussed more fully in the following notes.

12. The flow chart which represents the hazard protocol shows the outcome of various types of impact. It is important to realise that these outcomes are probabilities – *not certainties.* In the shock initiation regime, for example, small changes in the loading density or composition of an explosive can create large differences in the shock sensitivity. This is almost certainly true in other areas, e.g. a charge damaged in transit to a military store may be more susceptible to ignition by case distortion than one carefully prepared for response testing. Consequently, however thoroughly a munition is tested, the above statement should be borne in mind.

13. In addition it will be seen that many areas of this protocol do not have quantitative predictive models. In its present form the protocol is intended to give a largely qualitative view of impact hazards. Where quantitative models exist, they should be used with caution.

14. In the following notes the term case is used as a generic description of case/liner/inhibitor/barrier; charge is used to describe any energetic material such as explosive or propellant; and any complete system containing a charge is referred to as a munition (this includes rocket motors). Fragment is used to denote any inert projectile impacting a munition (excluding shaped charge jets which are treated separately). Explosive bullets are not considered.

Notes (N) on the Detailed Protocol

N1. System Initial Conditions

Fragment Information

a. Distribution in space and time.

For multiple fragments, the effects of both simultaneous and sequential impacts have to be considered.

For simultaneous impacts the chances of two or more fragments being I close enough to reinforce each other is usually small. Consequently the first fragment considered by the protocol is either the first to impact or the largest striking surface of those impacting simultaneously. The latter decision is based on the probability that this fragment will impart a greater volume of shock to the charge and increase the chance of a prompt initiation. If this fragment does not cause shock initiation, then none of the others should. Consequently each of the simultaneous impacts can be examined in turn to see if a delayed reaction is created. To a first approximation each will see an undamaged charge (if this is the first cycle through the protocol), but the possible vent area (see N17, N18, N20 & N34) will be from the sum of the impacts.

A possible exception to the reinforcement statement made above is for projectiles in the form of strips to impact simultaneously (possibly from a bomb casing). Some computer modelling shows the reinforcement of shock from impacts at relatively wide spacing. In turn this enhances the likelihood of shock initiation, and so the effective fragment is larger than any individual fragment when considering shock criteria. Hence projectile geometry is a factor when considering the effects of simultaneous impacts.

The effect of sequential fragments will depend on the delay between impacts and the displacement between impact sites. The delay will determine how much damage is done by the previous fragment and, if previous impacts have created inadvertent propulsion of the munition, will partly determine displacement of the impact. The lateral spread of fragments will determine the degree of damaged material encountered by the projectile (see also N11, N15 and N32).

b. Fragment properties.

The trajectory and speed of the fragment are important in determining the subsequent response. The trajectory determines which part of the munition is to be impacted, and hence fixes many of the geometric factors discussed below, and in N3-N7 and N17, N18. Both the obliquity of the impact and orientation of the fragment, as well as the velocity, have an important bearing on the ability of the projectile to transmit a shock to the charge, and to distort or penetrate the case. Other factors include fragment surface shape (e.g. certain cones and irregular fragments have little chance of generating strong shocks) and length, and the homogeneity of the fragment (density gradients and fragment cohesion). The Hugoniot is needed for shock calculations and the strength for penetration predictions.

Munition Information

c. Case

The number and type of layers determines both shock transmission and penetration/distortion. A Hugoniot and strength factors should be known for each layer together with the effective thickness presented to an impacting fragment. The curvature of the case and air gaps between the layers could have an effect on the focusing and amplitude of transmitted shocks. Even relatively thin layers could play an important role, especially in shock initiation. It is possible, depending on the Hugoniots of fragment, case and charge, for certain cases to apparently increase the sensitivity of a charge to shock initiation.

A previous impact can change the Hugoniot (e.g. by changing material porosity), the strength (work hardening or failure zones) and the geometry of the case. This could affect both shock transmission and penetration/case distortion. The presence and width of any air gap between charge and case must be established. This will affect shock transmission (see N3-N7, N25), and could affect the penetration of the case (see N17, N18) and the mode of case failure (see N23). In addition such a gap may allow fragments of case or the projectile to strike what is effectively bare explosive, increasing the chance of shock initiation (N26) Such an impact would have to take account of case material ahead of the fragment (whether it is in contact with the fragment, what impedance mismatch there is, what velocity and shape it is if it's detached from the fragment). Any changes in velocity, geometry and equation of state of the fragment have to be found in order to calculate the shock produced, and subsequent penetration if shock criteria are not satisfied.

d. Charge

The material properties include the Hugoniot for shock transmission, and strength characteristics for resistance to penetration and ease of charge break-up (important in determining growth of reaction after non- shock ignition, see N34). Geometry is important both for delayed reactions and for small (or thin) charges, where either run-to-detonation (see N3, N5) is not satisfied, or reflections off a rear wall increase the shock level in the charge to the point where shock criteria are satisfied. Both charge dimensions and configuration are factors in the above (see N32 for further comments).

The sensitiveness of the charge corresponds to the ease which a chemical reaction can be triggered (ignition), and is of importance in delayed reactions. Shock sensitivity (prompt reaction) depends on porosity, grain size (mainly for explosives), web size (for propellants), critical diameter (propellants although some of the less sensitive explosives could also be affected) and ambient temperature.

A previous impact can change the Hugoniot and increase the shock sensitivity by introducing additional porosity through the break-up of the charge (providing the shock from that impact has decayed - see comment under N3). If a degree of chemical reaction has already been triggered, this could affect the sensitiveness of the charge to further impacts. Charge break-up could introduce additional burning surfaces to facilitate the growth of a DDT response (deflagration to detonation transition) triggered by one of the non-shock mechanisms (see N14, N20 & N34). Both the strength behaviour over a range of strain rates (work hardening, thermal softening and melt) and a fracture criterion are needed to predict the charge break-up.

If a munition has been damaged before the fragment impact (e.g. by being dropped, or thrown against a bulkhead by a blast wave), it is probable that the most important damage is to the charge (see above for possible effects). If an object penetrates the case in this pre-fragment phase, then in principle it should be treated as an impact in its own right.

N2. Failure Diameter of Charge

The diameter of the charge (D) needs to be greater than or equal to the failure (or critical) diameter (d_c) of the energetic material for prompt Shock-to-Detonation Transition (SDT) to take place.

N3. 1D Shock Initiation

A shock which has some volume of one-dimensional (1D) flow within it appears to be one of the most efficient initiators of energetic materials known. The response to such a shock is usually prompt and so only a small volume in the region of impact need be considered for a very limited time when attempting to understand shock initiation. Equally the material properties are relatively simple (Hugoniot for energy transfer and some global chemical reaction kinetics - which are far from simple but are usually “tuned” for a given set of experiments). Consequently this area is ideal for small scale testing and theoretical modelling. For this reason it is the best understood of all the areas on the flowchart.

If the charge is already shocked by a previous impact, but has not initiated, then subsequent shocks transmitted into the shocked material will encounter a reduction in shock sensitivity. This is due to the first shock closing up voids in the charge, and leaving less scope for hot-spots to form.

N4. Projectile Diameter

If the projectile diameter (d_f) is very much smaller than the critical diameter of the charge, prompt shock initiation fails and other mechanisms such as bow shock (see N23) come into operation.

N5. 1D Shock Criteria

A variety of empirical relationships exist in this region to describe the boundary between detonation and non-detonation. If the criteria are satisfied then detonation is the usual outcome. However, for impacts onto bare explosives, spheres and some cones have shown a response

which, although severe, falls short of full detonation. For explosives the initiation threshold has been described variously by:

- Critical Energy Criterion (for plates, rods and spheres, rods into cased explosives.
- P^nT (P = shock pressure, T = shock duration).
- Sometimes used as an approximation to Critical Energy with n = 2, sometimes as an independent criterion
- V^2D (V = impact velocity, D = projectile diameter) for rods and spheres.

All of the above rely on sufficient explosive being present to allow run-to-detonate to occur .For insufficient explosive the apparent shock sensitivity changes (see N1 d).

For propellants the web size, impact pressure and critical diameter are found to be important factors in a shock criterion. Hydrocode simulations are available which include a simplified description of the chemical kinetics and hot-spot growth. Such simulations usually have to be “tuned” using data from embedded gauges, or are based upon empirical observations such as the “Pop-plot” and in general should be used with care if operating away from the model’s data base.

Basic measurements to determine shock sensitivity are the gap or fragment impact tests, and the critical (i.e. failure) diameter is obtained from a wedge or stepped cylinder test. The run-to-detonation is obtained from the Pop-Plot.

N6. Divergent Shock Transmission

A region of impact has been found in which the 1D shock is either not transmitted, or is not transmitted in significant amounts, but a prompt initiation is still experienced. This can only be induced in this time scale by the diverging shock, which is at a high level since this phenomenon has only bean observed at high impact velocities.

N7. Divergent Shock Criteria

Unlike the 1D criterion, where for most instances detonation will follow once the initiation threshold has been achieved, more sophisticated reactive flow modelling is required to find the level of response which is ultimately obtained from a given stimulus. The response level is determined by the balance struck between release wave propagation and the speed of reaction growth once ignition criteria have been satisfied.

N8. Shock Collisions

Where the initial shock is not sufficient to trigger initiation, it is possible for the geometry of the charge to amplify the shock at later times. Two examples are,

a. A cylindrical charge in a dense container such as steel. The shock reflects from the container wall and converges on the centre-line of the charge, giving enhanced pressures, much in excess of the original, at late times which caused a delayed detonation.

b. A rocket motor where the shock runs both ways in the charge surrounding the bore of the motor and collides at a point opposite the original impact. Again enhanced pressures can be obtained leading to reactions which are not caused by the original shock.

N9. Enhanced Shock Criteria

As in N7, the criteria needed to predict the onset of reaction, and its subsequent growth, are more complex than for the 1D shock interaction. The shock collision, often at complex angles, needs to be simulated on hydrocodes using a very fine mesh to capture the transient peak pressures generated. Again sophisticated reaction growth models are required to obtain the final response levels.

N10. Shock Damage to Charge

If the charge is damaged due to the passage of the shock, this increases the possibility of subsequent ignition due to other stimuli such as penetration by the projectile. It will also alter the shock sensitivity for subsequent impacts, probably making the material more sensitive once the initial shock which has caused the damage has been released.

N11. Update Charge Properties

It should be noted that the descriptions of both the energetic and inert materials within the munition are constantly updated with time - both within a given cycle and between impacts. The types of possible changes are discussed in N1, N3 and N10. Where this box occurs in the flowchart, it is probable that the sensitivity of the charge to a range of stimuli will change - usually (although not always) making the energetic material more sensitive.

N12. Shock Entering Damaged Material

There is the possibility of a reflected shock, or a shock from another fragment which has impacted simultaneously, entering damaged charge material.

N13. Criteria for Shock Initiation of Damaged Charge

Similar problems exist to those of N7 and N9. Here the timing of the entry of such a shock into the damaged material will be important, since it is very likely, when considering the situations discussed in N12, that the damage will still be changing with time. Hence the geometry of the charge and the pattern of impact will be important in determining final response.

Also important is the fact that the sensitivity of the damaged material will also be changing, a factor that would have to be considered by any predictive criterion.

N14. Compression of Porous/Damaged Charge

In very porous or damaged charges there is the possibility that a compression wave (as distinct from a shock) could cause ignition by the production of heating due to the large amounts of plastic work associated with the compression of the voids, and the adiabatic heating of the trapped gas. In this instance it is only necessary to transmit a stress wave of sufficient amplitude into the charge rather than having to produce a shock. This is possible for lower velocity/thicker cases/smaller projectiles than needed for shock initiation. The large amount of surface area available for burning coupled with probable lack of an entry hole makes a fast reaction growth and its attended response (see N34) possible.

The factors required for such a condition are a large degree of porosity (e.g. propellant bed) or a high degree of damage without large scale dispersion of the energetic material. A theory is needed to predict the onset of chemical reaction, and the subsequent growth requires a description of the equations of state controlling the solid, solid and gas, and gaseous phases. Knowledge of the chemical reactions and heat transfer properties is also needed.

This process tends to give a delayed reaction, which in turn indicates that it may not be suitable for small scale tests since the time scale could allow conditions throughout the munition to affect the response.

N15. Charge already Damaged/Porous

If the charge is already damaged or porous it is probable that the dynamic element of damage growth/change discussed in N13 no longer applies. The sensitivity factors should have been set at the start of the cycle or in a previous cycle. Non-damaged or non-porous material is unlikely to undergo ignition due to compression mechanisms.

N16. Impacts into Covered Charges

For a non-frangible, uncovered, lightly-confined energetic material it is probable that such a charge will only undergo shock initiation and nothing else, in contrast to a heavily confined bare charge where other degrees of reaction have been observed. The impact of a projectile into

bare energetic material occurs in test vehicles or where there is an air gap within the munition (in which instance the impacting projectile can come from the protective casing as spall or a plug ahead of the main projectile).

N17. Possibility of Penetration Given the Projectile Velocity

On the flowchart the possibilities for penetration are evaluated by first asking whether the fragment velocity is sufficient to allow the fragment through the case.

The simplest theory for determining the ballistic limit is to equate the original energy of the projectile to the work done in causing failure in the case (for modes of failure see N23), plus the elastic energy introduced into the system This assumes a knowledge of the failure mechanism (which is affected by the shape of the projectile), the distribution of elastic stresses and the behaviour of strength (which will provide the amplitude of these effects) at various strain rates in case and projectile. Such data (plus a failure mechanism for the projectile) is also needed for calculating the possibility of projectile break-up, which could have an effect on both case and charge penetration.

The theory is complicated by the fact that in most munitions the case is in contact with the charge. This will affect the stress waves in the system and so, possibly, affect the mode of failure. Also the charge provides additional inertial backing for the case. Hence a slug of case material, even when failed, may then take additional energy to move out of the path of the projectile.

N18. Possibility of Penetration Given Projectile Dimensions

Assuming that the velocity criterion is met, the size of the projectile is one of the main factors which will determine whether penetration is accomplished. Other factors are the densities of projectile and case, the strengths (and their behaviour at various strain rates) of these materials and the shape of the impacting surface of the fragment. The charge will also affect the degree of penetration by taking energy from the projectile during charge break-up, and also providing inertial resistance to the fragment's progress. If a mild reaction is triggered in the charge, this may also affect the projectiles progress (a vigorous reaction probably makes the subject academic).

As an order of magnitude estimate, the Bernoulli penetration depth (which only depends on the square root of the density ratio of case to fragment) gives the case thickness needed to defeat a projectile of a given length. However, the situation is complicated by the fact that at low velocities (which are the case in the bullet/fragment regime) strength is a factor in this penetration (the Bernoulli depth is an overestimate.) The case is often relatively thin, which means a greater possibility of failure (see above and N23), and it may be layered with air gaps, both of which will affect the penetration.

N19. Ignition without Ventilation of the Charge

For heavily confined charges, ignition due to case distortion, but without subsequent penetration, means that the lack of venting imposes little restriction on the growth of reaction (see N34). Consequently there is a high probability of a severe explosion. It should be feasible to use small scale tests to warn of the possibility of this condition, since ignition probably occurs near the site of impact. An investigation of a range of impacts using a representative case, but small amounts of charge, will show if ignition occurs at maximum case distortion (but below penetration). Although the response will not be modelled, an ignition at this point indicates the possibility of a problem with a larger charge.

N20. Possibility of Ignition

Probably the main source of ignition is the heating of the charge by plastic work. This is carried out by rapid charge distortion (which does not allow time for heat to dissipate) and includes adiabatic shear banding, pinching, compression and extrusion. There is also the possibility of the deposition of hot spall for munitions with an air gap between case and charge. The key to ignition is the amount of heat the above mechanisms can generate, and the ease with which the charge molecules can use this energy to start breaking up (measured by the sensitiveness of the charge). The initial progress of ignition within the charge can be delayed by physical separation of the

charge material, especially by the presence of cracks, or propagation of cracks produced by the impact.

Important factors in this process are the ambient temperature of the charge, and for propellants the strain rate adjusted glass-transition temperature. However, there is a need for a general theory to predict the onset of chemical reaction.

N21. Brittleness of Charge Material

A key factor in the growth of reaction from the initial ignition is the mechanical properties of the charge. Brittle charges can break-up to give large surfaces which encourage burning. Rubbery or pressed charges tend not to have this problem.

Consequently a brittle charge which has been damaged by case deformation, and for which no venting is available, has a high probability of generating a severe response.

N22. Damage to Charge

The degree of damage to the charge will affect its subsequent sensitivity to a range of stimuli - see N10.

N23. General Points on Ignition Due to Case Distortion

The projectile will penetrate the case (see N17, N18) but ignition is due to the initial case distortion. Ignition mechanisms are discussed in N14. However, the mode of case failure may affect the dominant mechanism. Failure may be due to plugging, petalling or spalling depending on the shape of the fragment's impact surface and the presence of an air gap.

The promptness of ignition and the speed of reaction growth (see N34) could assign an importance to the speed at which the projectile clears the penetration hole in the case. If this hole is blocked for long periods after ignition (and especially if the projectile is brought to a halt in the hole) it is possible that the lack of venting could increase the severity of response (see N19).

N24. Damage to Charge from Case Distortion

See N22.

N25. Air Gap between Case and Charge

The size of any air gap will, within certain limits, determine the speed and shape of any projectile crossing it. After penetrating the case, the projectile, and any associated fragments (see N16), will change velocity due to the low impedance of the air gap. This change takes a finite time due to the time taken by the release waves within the fragment to impart the changes in velocity throughout the projectile material. Velocity gradients set up by this process within the fragment will lead to alterations in shape and size.

Small air gaps will have a negligible effect on the projectile, although their effect on any shock transmission into the charge could be considerable - leading to significant shock attenuation. The fragment velocity will eventually stabilise for a large air gap, although any fragment dispersion will continue until impact on the charge.

N26. Projectile Impact on Bare Charge

After crossing an air gap, the projectile, or case fragments preceding it, will impact on bare charge. If the velocity is high enough a shock will be generated. This requires a re-examination of the shock criteria taking into account the changes that have occurred to the projectile and charge since the first scan of these criteria. The projectile in this instance is the material that first comes into contact with the charge, and so could come from the case.

The velocity, density, shape and distribution of such material will all have been determined by the impact of the original projectile into the case (see N17 and N18), and will be needed when estimating whether shock criteria have been met.

Equally changes to the charge during the cycle (damage, pit-shocking etc.) need to be taken into account when considering these criteria.

N27. Fragment Penetration of Charge

The velocity of projectile penetration through the charge determines the dominant mechanism by which reaction is started in the energetic material.

N28. High Speed Projectile Penetration

It is assumed that in this instance the penetration rate is above the sound speed in the charge and so a bow shock is formed. Such a situation lies within the shaped charge protocol.

However, if no violent reaction occurs it is worth noting that large scale charge disruption is probable, to which the comments in N29 apply on both the likelihood of further reaction from fragment impact, and the chance of vigorous reaction from fast moving, broken-up charge material.

N29. Charge Break-Up from High Speed Impact

If another impact does not occur within a very short space of time, it is probable that such an event will scatter the charge. A large scale charge break-up will tend to deny other impacts the opportunity of spreading a reaction through a large body of energetic material, and so lower the response.

However, three possibilities exist that, if satisfied, may raise the response level. The first has another impact at a time before the charge has become widely scattered. The charge in this instance merely appears to be damaged, increasing sensitivity. The second has the case remaining largely intact and containing most of the charge. Again the charge material could appear as being merely damaged. The third possibility is that a significant mass of charge material remains intact (although damaged) but is thrown at high speed against a solid object. This may induce a shock into already damaged material with a correspondingly increased sensitivity.

In all of the above, much depends on the circumstances of the munition break-up and the surroundings in which it occurs.

N30. Low Speed Projectile Penetration

The penetration is below the local sound speed and so no bow shock is formed. The compression wave which may form in front of the projectile is not an efficient mechanism for starting a reaction unless the charge is porous or already damaged.

N31. Low Speed Fragment Lodges in Charge

Ignition due to a low speed fragment is the same as discussed in N20, with the additional hazards of heat generated by pyrophoric fragments, heat from normal fragments and the possibility of additional heat flow from a fragment that breaks up.

Also such a penetration into a porous or damaged medium may set up a stress wave ahead of the projectile that satisfies the requirements discussed in N14, but with a vent hole which will lessen the chances of a severe reaction (see N23 for discussion on the situation where fragments block vent holes).

N32. Low Speed Fragment Passes through Charge

Ignition hazards are as for N31, but with less likelihood of fragment heat being a mechanism. One additional hazard is the possibility of pinching or crushing the charge between the fragment and a back-plate. The increased venting (from entry and exit holes) may decrease the response (depending on the time scale over which reaction growth occurs). For a sufficiently massive fragment, the munition may break-up leaving little chance of other impacts creating a reaction.

However, there is a chance that broken-up (and hence porous) charge may be more susceptible to ignition and violent reaction if it is thrown at speed against a solid surface. This may happen if the case is split sufficiently or if there is a cavity or channel (especially one that is unlined) within the charge (such as in rocket motors). A projectile crossing such a cavity could cause a spall of charge material in front of it, or a spray of material behind it, either of which could be ignited by the stress wave formed on striking the far surface (see N14). Such an occurrence obviously depends on the geometry of the charge and the trajectory of the fragment through it.

For lightly confined frangible energetic materials there is a probability that, after fracture, subsequent shocks/compressions acting on the damaged material may cause initiation at lower thresholds than for the undamaged charge.

The break-up of the energetic material is principally caused by tensile waves, generated at free surfaces, damaging material in the body of the charge. The geometry of both projectile and charge is important in determining whether the projectile can generate a compression/shock in material that has been damaged by such a process, since the geometry will determine the time frame in which such damage can occur.

If XDT criteria are not satisfied, it is highly probable that the projectile will completely penetrate the charge, breaking it up and denying subsequent impacts (unless they are very close in time and sufficiently displaced from the first) the chance of initiation (but see also comments - particularly the second caveat - discussed under N29).

N33. Reaction Threshold

If no chemical reaction is triggered, then only mechanical damage to the munition needs to be accounted for before any further impacts are considered (see N11). If reaction is triggered, the level of response depends on factors discussed in N34.

N34. Growth of Reaction

This relates to the explosiveness of the material and can result in a wide range of responses from severe explosion (and possibly detonation) to mild burn. The main factors are the brittleness of the charge material (and hence its ability to easily produce large burning surfaces on fracture) and the amount of venting available which allows gas to escape and pressure to drop. A porous or damaged charge may fill the same role as a brittle one (see N14). The quantity of material present, the ambient temperature and the charge configuration (e.g. web geometry for rocket propellants) can also be important in determining the final response.

In general terms, a charge which is easily broken to form large surface areas and has little ventilation, is likely to undergo a rapid/sustained growth of reaction leading to a severe explosion. On the other hand a rubbery composition which deforms but is difficult to fracture, and has a large amount of ventilation, is likely to undergo a slow growth of reaction (or a growth that is quickly terminated) leading to a mild response. A variety of responses can be obtained for situations between these extremes, and a quantitative theory is needed to describe reaction growth. The major factors required are listed in N14. Small scale tests may not be applicable since the overall characteristics of the munition are important.

A projectile penetrating damaged/porous material will increase the possibilities of generating sufficient compression to ramp any reaction process into rapidly forming a shock and thence to detonation (XDT). Such a process causes a fast reaction growth.

N35. Mild Reaction

This could change the charge equation of state, sensitiveness and shock sensitivity to subsequent impacts. It could also change the penetration characteristics of the charge material and stress the case.

Inadvertent propulsion could change the charge orientation and position for the next impact.

N36. Further Impacts

For simultaneous impacts, the possibility has to be considered that another fragment impacting a different part of the munition may produce a higher response. This is applicable to non-shock mechanisms. See N1-a for the selection of the “first” fragment, and the degree of damage that will be seen by other simultaneous impacts.

Sequential impacts are more likely to produce a larger response from the munition because of damage already done to the charge. See N1-a. for a discussion of the factors involved.

N37. Finish

Although the immediate effects are small, with little in the way of blast and fragment production, some degree of burning is probable. When considering mass reaction in munition stores, it should be noted that this cycle produces the possibility of inadvertent propulsion of the munition under attack.

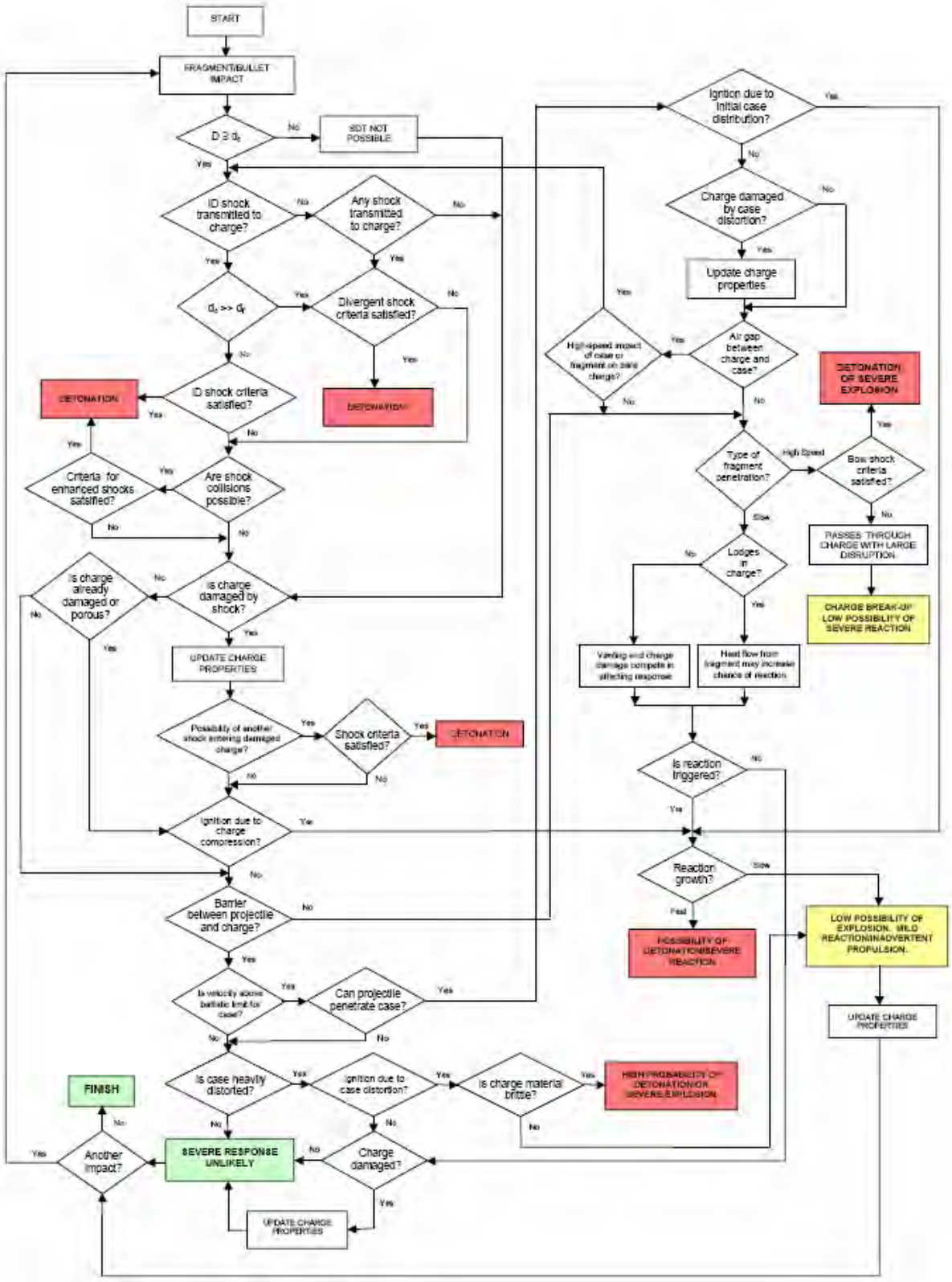

Figure D-2 Detailed Hazard Protocol – Bullet/Fragment Impact

TABLE D-1 Examples of tools available and data required to analyse bullet/fragment impact reaction paths

KEY FACTORS/ REACTION MECHANISMS	TOOLS FOR ANALYSIS	PROPERTIES REQUIRED
Shock to Detonation Transition (SDT)	Gap Test Wedge Test Critical Diameter Test Plate Impact Test	Scaling Effects Fragment Characteristics Shock Pressures Shock Duration Pop Plot Design Dependent
Penetrate Case / Severe Distortion	Mechanical Properties of Case and Projectile at High Strain Rate Projectile Physical Characteristics (Velocity, Geometry, Mass)	Mechanical Properties of Case and Projectile Geometry and Ballistics of Projectile Ballistic Limit for Case Projectile Break-up and Resulting Fragment Characteristics Design Dependent
Hit Bare EM	No Small Scale Tests Proposed	Design Dependent
Bore Effect / Finnegan Effect / SDT	Burn-to-Violent-Reaction (BVR) Subscale Component Testing High Velocity Shotgun Test High Strain Rate Mechanical Properties Testing Pick-up Test (Reaction Acceleration)	Shock Hugoniots of Energetic Materials and Impactor Damage Dependency
Reflected Shock Possible	Plate Impact Test	Munition Design Issue
XDT	Shock Test Damaged Material Double-shock Gap Test High Strain Rate Mechanical Properties Testing High Strain Rate Fracture Mechanics Testing	High Strain Rate Mechanical Properties Testing High Strain Rate Fracture Mechanics Testing

KEY FACTORS/ REACTION MECHANISMS	TOOLS FOR ANALYSIS	PROPERTIES REQUIRED
Ignition	DSC Temperature of Ignition Hot Ball Test / Hot Fragment Conductive Ignition Friction Sensitivity Mechanical Properties Testing at Relevant Strain Rates Fracture Mechanics Testing at Relevant Strain Rates	High Strain Rate Mechanical Properties Testing High Strain Rate Fracture Mechanics Testing Kinetics and Thermochemistry of EM Decomposition as a Function of Temperature and Pressure
Significant Material Damage	Friability (Shotgun Test) Tube Test Hopkinson Bar Fracture Mechanics Testing (Fracture Toughness)	Material Properties and Fracture Toughness at Appropriate Strain Rates (Fracture Mechanics Properties) Additional Surface Area Generation
Sufficient Venting	Mechanical Properties Testing Burn Rate (at High Pressure) Projectile properties (Velocity, Geometry, Mass, Orientation) Close Bomb Test Ballistic Limit Testing	Highly dependent on munition design High Strain Rate Mechanical Properties Testing Effect of Confinement
Layered Burning (normal surface regression)	Burn Rate (Strand Burner) Closed Bomb Burning Tube Tests Small Scale Motor Tests	Burn Rate as a Function of Temperature and Pressure
Propulsion	No Small Scale Tests Proposed	Dependent on Munition design

TABLE D-2 .Examples of tests that can be used to generate the data required in Table C-1

PROPERTIES	TESTS TO BE CARRIED OUT	GENERAL POINTS
Porosity	Density Measurements	
Pore Size	Refractive Matching Fluid Atomic Force Microscopy Scanning Electron Microscopy (SEM)	
Particle Size	AOP-7 test category 102-02-xxx Microsonic Techniques	
Crystal Quality	SEM Microscopical Techniques X-ray Diffraction Density measurement test	
Burn Rate	Strand Burner Closed Bomb Hybrid Combustion Bomb	Required as a function of temperature and pressure
Burn Rate (Damaged Material)	Strand Burner Closed Bomb Hybrid Combustion Bomb	Not measured routinely Highly dependent on damage characteristics - (Thermal or Mechanical)
Friability: propensity to fracture/damage	Shotgun Test (Friability Test) Bullet Damage Test Hopkinson Bar Failure Modulus Taylor Impact Test Fracture Toughness	
Damage Characterisation	Sectioning Microscopy X-ray Tomography Closed Bomb (Surface Area) Neutron and X-ray Diffraction Coefficient of Thermal Expansion	Fractures Porosity Dewetting Chemistry
Constitutive Properties and Related Tests	DMA (TG, Modulus, Elastic Properties) Uniaxial Tensile/Compressive Testing (Low Strain Rates) Servohydraulic Mechanical Test (at Rates up to 10^4/s Hopkinson Bar (at Rates up to 10^4/s) Parallel/Oblique Tests or Combined Pressure Shear (at Rates up to 10^6/s) Flyer Plate Impact Test (at Rates up to 10^6/s) (uniaxial	Stress is a function of strain, strain rate, temperature and pressure

PROPERTIES	TESTS TO BE CARRIED OUT	GENERAL POINTS
	strain).	
Chemistry	Tests to determine Arrhenius kinetics (low pressure decomposition) DSC Mass spectroscopy Adiabatic bomb calorimeter ODTX	Fast decomposition (μs) Slow decomposition (min) Very slow decomposition (Ageing) Arrhenius kinetics Activation energy Heat of reaction Parameters for chemical purposes Thermal expansion Compatibility issues in environment of IM tests
Bond Strength	AOP-7 test series	
System Properties		Geometry and physical size Loading density External confinement Gas tightness Free volume Casing type

ASSESSMENT OF SYMPATHETIC REACTION

Overview

1. The primary purpose of the Sympathetic Reaction (SR) protocols is to expose the underlying chemistry and physics, to identify important controlling parameters and phenomena, and to expose important data gaps. They may also provide helpful guidance to people who are trying to solve particular problems relating to energetic material response. However, they are not tools which can be used to predict results or to replace experiment. There are a number of questions, gaps in data, and gaps in understanding which preclude a fully predictive capability.

2. The SR protocols are based on the idea that a munition will face a hierarchy of hazards when an adjacent donor(s) undergoes an explosive reaction – usually detonation. The initial hazard, the shock generated during impact of fragments or blast on the munition, may lead to a prompt (and severe) response if shock criteria are satisfied. If not, then the munition may undergo a delayed response caused by interactions between the munition case and the energetic material. The protocols lead the user through this series of potential hazards and probable outcomes.

3. In order to simplify the task of developing a protocol for SR, the problem has been broken down into three categories:

- Single donor and single acceptor
- Single donor and multiple acceptor
- Multiple donor and multiple acceptor

4. The single donor and acceptor, or one-on-one scenario is the simplest to analyze. It has been further divided into two cases depending on the presence of a buffer between the donor and acceptor, since such a buffer can significantly affect the physics of the event.

5. In the single donor and multiple acceptor, or one-on-many situation, the single donor may be surrounded by multiple acceptor rounds and, possibly, some other confinement. The effects of this configuration can vary greatly from that of the one-on-one case.

6. Finally, the SR protocols treat the scenario of multiple donors and multiple acceptors, or stack-on-stack. This situation deals with the potential to propagate the detonation of one group of munitions to a second group. It takes into account the issues from the simpler scenarios, adds new issues, and, where necessary, refers the user back to the one-on-many protocol.

7. Table E-1 identifies tests and tools that are pertinent to each of the decision points in the protocols and the materials properties required to assist in the modelling or prediction of the results of such tests. Table E-2 gives examples of tests that can be used to determine values for the properties identified in Table E-1. These tables are neither exhaustive nor exclusive, and users of the protocols should seek to use the most up to date and well validated tools available to them.

The Simplified Sympathetic Reaction Hazard Protocol

8. The simplified protocol in Figure E-1, presents the hazard assessment protocol logic in a form that captures the overall response mechanisms. It combines the individual steps assuming that, given certain conditions, the overall mechanism will determine the response.

9. When applying the simplified protocol, the following should be considered:

a. The decision process does not allow for responses other than those caused by shock to detonation transition (SDT). In cases where XDT or DDT is a significant possibility (most notably TNT based explosives and detonable propellants), this possibility must be considered if it is shown that SDT does not occur first. At present, XDT and DDT cannot be predicted to occur, although they are known to be much less likely with solid plastic bonded explosive (PBX) charges than with other materials.

b. Where adjacent munitions are struck by the expanding donor case (with or without attenuating effects of buffers or packaging), the results can be predicted using hydrocodes with a suitable EM reactivity model.

c. Arena test results may be used to generate the fragmentation effects from the donor.

d. No account is made for the possibility of acceptor munitions reacting as a result of secondary impacts (impacts on the ground or surrounding structure after being propelled by the donor reaction). Such reactions may be very significant but are very dependant on surroundings and are not called up in the present test methods.

The Detailed Sympathetic Reaction Hazard Protocols

10. The primary purpose of the detailed sympathetic reaction protocols is to expose the underlying chemistry and physics, to identify important controlling parameters and phenomena, and to expose important data gaps. They may also provide helpful guidance to when trying to solve particular problems relating to energetic material response. However, they are not tools which can be used to predict results or to replace experiment; there are a number of questions, gaps in data, and gaps in understanding which preclude achieving a fully predictive capability.

11. The detailed protocols in Figures E-2 to E-5 consider each step in the sequence of events leading to some response, and examine the details of each mechanism. Because sympathetic reaction can occur in several configurations involving both single and multiple donors and acceptors, the problem has been broken down into three categories.

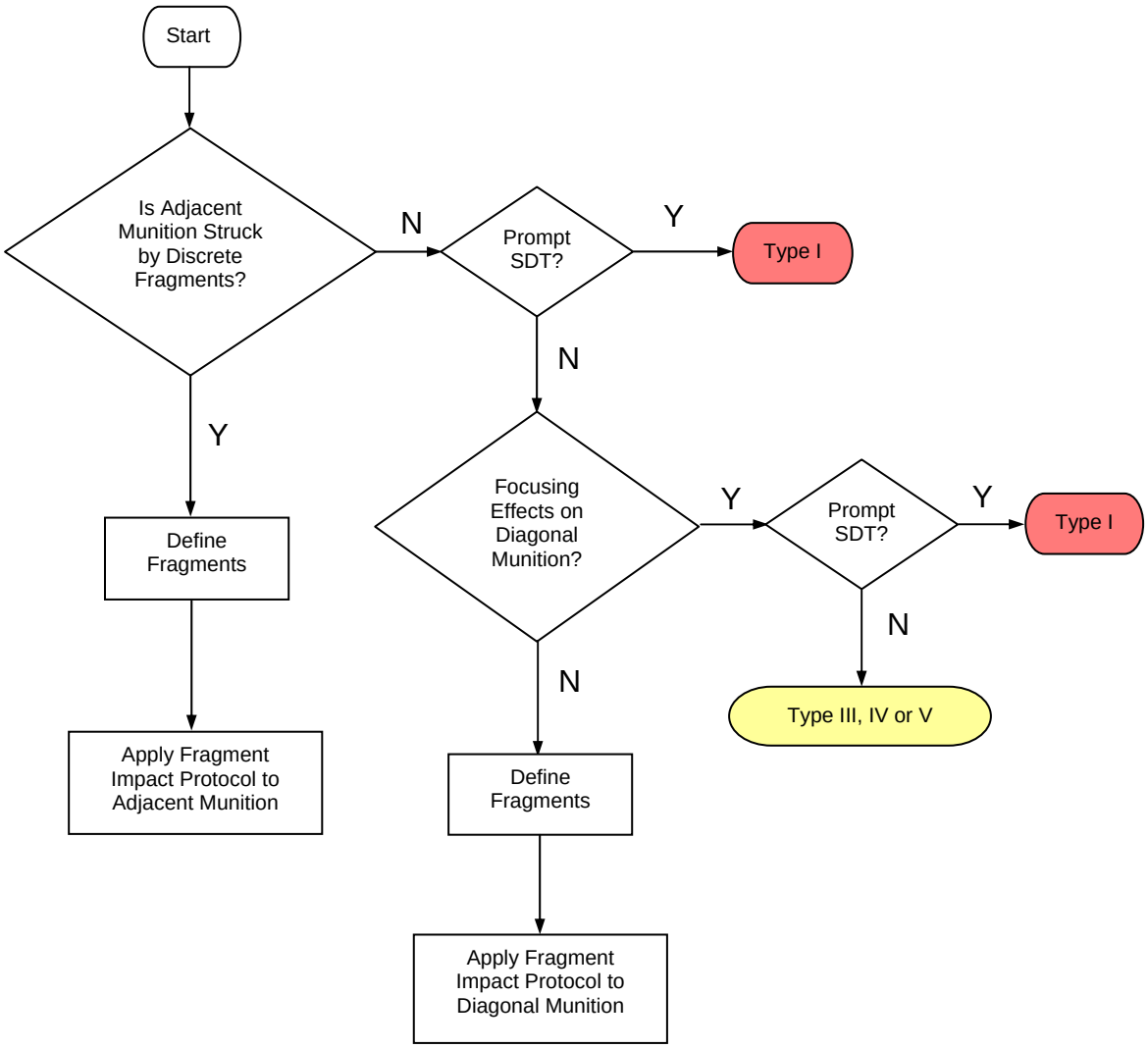

Figure E-1 Simplified Hazard Protocol – Sympathetic Reaction

General Breakdown of the problem

12. To simplify the task, the sympathetic detonation problem was broken into three categories, as shown in Figure E-2 and described below:

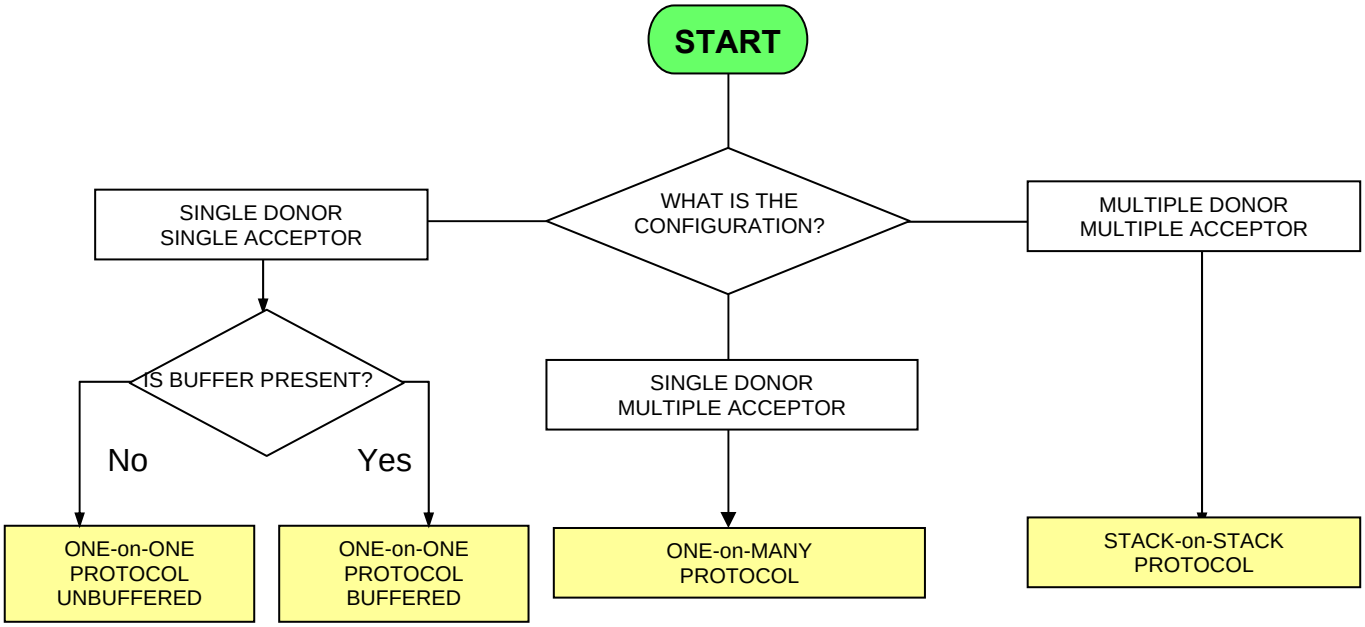

Figure E-2- General Breakdown of the Problem

12.1 **Single donor and single acceptor (one-on-one) tests**. This is the easiest case to analyze. It has been further subdivided into cases with and without a buffer between donor and the acceptor. The presence of a buffer can significantly alter some of the physics involved.

12.2 **Single donor and multiple acceptor (one-on-many) tests, with or without confinement.** In this category there is only one donor round, but the donor may be surrounded by multiple acceptor rounds and perhaps by other confinement, such as the wall of an ammunition compartment. The presence of multiple rounds and confinement can significantly alter the physics from what is seen in one-on-one tests.

12.3 **Multiple donor and multiple acceptor (stack-on-stack) tests**. In this category, a group of rounds are detonated, and the object is to prevent propagation to a second group. The issues involved become more complicated as one proceeds from category 1 to 3: the higher categories involve all of the issues in the preceding categories, plus others. Thus, the protocols for the higher categories refer back to the protocols for the lower categories.

Single Donor And Single Acceptor Tests

13. The protocol for the unbuffered one-on-one case is shown in Figure E-3. It deals with one-on-one tests where there is nothing, except air, between the donor and the acceptor. The physics of the process can change as the distance between the rounds changes. Thus, the protocol separates into three branches as follows:

13.1 **Widely spaced rounds (separation distance greater than about 2 round diameters).** In this case, the fragments from the donor act individually on the acceptor and the situation is relatively simple (at least from the point of view of writing a protocol). Generally, the problem reduces to one of fragment impact, a problem which is treated by a separate protocol. In rare cases, air blast may be a mechanism, but air blast is an inefficient initiation source and can generally be neglected with widely spaced rounds. Sensitive explosives which are either unconfined or lightly confined with low density (less than explosive density) material may be an exception, but this has not been included in the protocol chart.

13.2 **Closely spaced rounds (separation less than about one-half of a round diameter).** In this situation, the expanding case from the donor either hits the acceptor before it fragments, or it hits the acceptor in the form of closely spaced fragments which act as a curved plate. Broadly speaking, two types of initiation processes may occur:

a. Shock initiation. The most obvious and likely mechanism in this situation is shock initiation due to the impact of the flyer plate. The velocity of the expanding case and the shock pressure in the acceptor can be calculated relatively easily. For very close spacings, they increase with distance. Thus, there can be two critical separation distances, a lower limit below which propagation does not occur and an upper limit above which it does not occur (because the plate has separated into discrete fragments.) The response of the acceptor can be estimated using P^2t relations or computed more accurately using various shock initiation models.

b. “Non-shock” mechanisms. The term “non-shock mechanisms refers to a variety of processes resembling DDT or XDT which may cause initiation in some manner other than a simple shock to detonation transition. In the unbuffered, one-on-one situation they may be much less likely than they are in other situations, but they cannot be ignored. In the protocol, the non-shock mechanisms have been sub-divided as shown below:

   i. Initiation on recompression. There are well documented accounts of energetic materials initiating on recompression and the process is often referred to as “XDT”. Apparently, the initial shock damages the material, and perhaps ignites it, without driving it to detonation. A following compression initiates detonation reflected from the back of the round or it could be the acceptor round hitting some other object. Unfortunately, models of this process are still rudimentary at best, and this area constitutes one of the knowledge gaps.

   ii. Deflagration to detonation transition (DDT). DDT is not usually observed in secondary explosives with normal amounts (less than 3%) of porosity. However, in sympathetic detonation tests, there can be extensive damage to the acceptor charge, and there is a possibility that this could lead to DDT if the explosive is ignited on a multiplicity of fracture surfaces and if the confinement remains intact. Although DDT in porous media has been studied for many years, the events that are postulated here could be quite different (because the porosity is generally much less), and this must be considered another knowledge gap.

   iii. Secondary impacts. If the acceptor round is not immediately detonated, it may be thrown against some nearby object and detonate as a result of the second impact (much like an XDT event). This is a more likely mechanism in stack-on-stack tests, but it is included here because the stack-on-stack and one- on-many protocols branch back to this protocol.

   iv. Blast. For cased rounds, in this close-in situation, the blast wave is not separate from the impact of the casing. Consequently, it is not shown as a separate box in the protocol chart. Nevertheless, the explosive products can have a significant influence on the pressure time history in the acceptor round, and can affect all of

the possible mechanisms listed above. When the explosive is cased in a low density material, such as a plastic, the explosive products can dominate the process.

13.3 **The intermediate case where the fragments are discrete, but where the impacts may be close enough that they act synergistically**. In this regime, the fragments are typically long strips which are quite close together. Gas products are escaping between the strips, so a blast wave (explosive products) may be in front of the fragments and may have sufficient strength to influence the test results. The blast wave could pre-compress and pre-accelerate the acceptor so that it is less sensitive to the impact of the fragments, or it could damage the acceptor and make it more sensitive to the fragments. (The double compression associated with the impact of the blast wave and then the fragments could act like the double compression in an XDT experiment.) This effect might be especially significant if the acceptor has a large internal void (as in a rocket motor), which permits extensive cracking. A further complication in this regime is that the fragments may be close enough for the shocks from adjacent impacts to collide and amplify. After evaluating the effects of the blast wave and multiple fragments, the protocol chart branches to the Bullet/Fragment Impact Protocol. However, it should be noted that all of the phenomena considered for closely spaced rounds can still be active here (and are considered in the Bullet/fragment Impact Protocol).

One-On-One Tests With A Buffer

14. The presence of a buffer between donor and acceptor can significantly alter the physics of an experiment, and even thin buffers can often suppress sympathetic detonation. The protocol chart (Figure E-4)) first asks if the buffer is reactive. Reactive buffers (usually propellant charges) have been used successfully to suppress sympathetic detonation. However, reactive buffers are not always effective, and the WAG 11 group felt that there was too little information to try to create a protocol for them. After dealing with the reactive buffer question, the protocol divides into three branches which deal with different buffer configurations. The division is somewhat artificial and intermediate cases exist, but each of the specified configurations involves unique problems. A description of each configuration and its special problems follows.

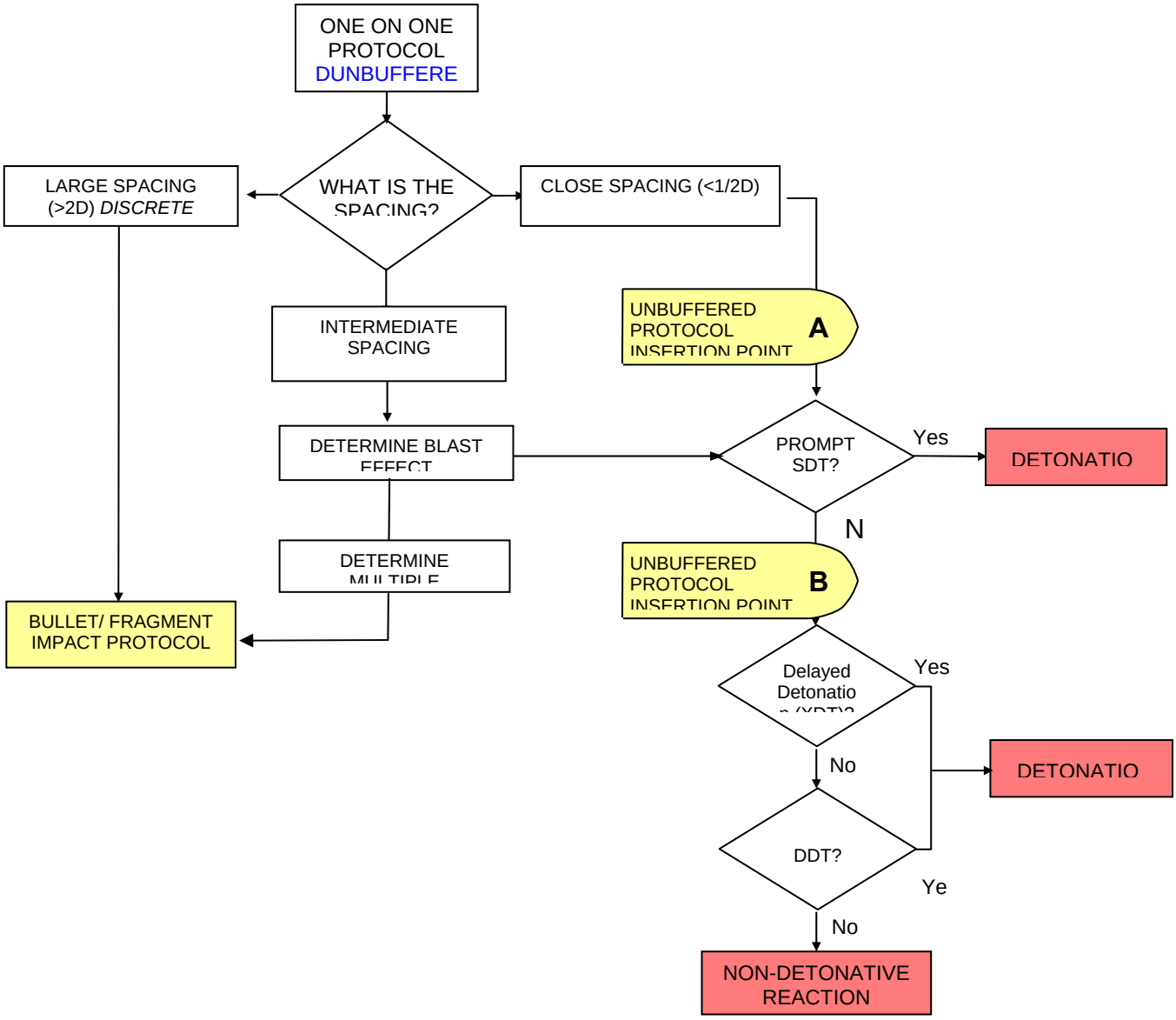

Figure E-3 One on One Protocol (Unbuffered)

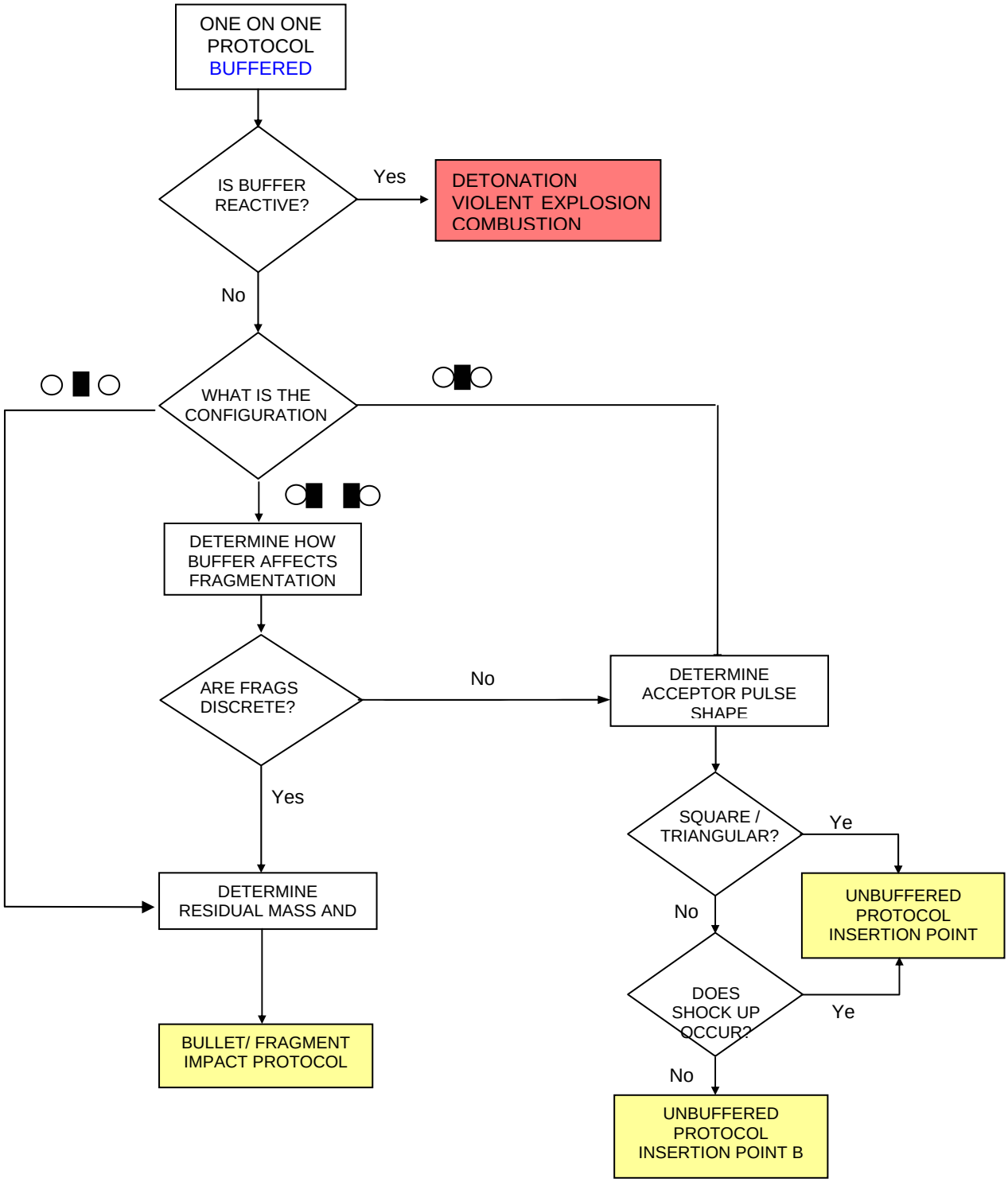

Figure E-4. One-On-One Protocol (Buffered)

14.1 **Configurations where the buffer fills the space between donor and acceptor**. Quite small buffers can often suppress sympathetic detonation in this case. Buffers work best when they fill the space between the rounds, because in this configuration, they keep the casing from achieving its maximum velocity. Such buffers profoundly alter the pressure time profile at the acceptor, The buffer significantly reduces the peak pressure seen by the acceptor round and also spreads the pressure pulse out so that the acceptor sees a ramped compression wave rather than a true shock. Both effects have a strong effect on shock initiation.

14.2 The effect of reduced pressure is easily treated by existing empirical rules and models, but the effect of rise time (ramp wave initiation) is more difficult to deal with. The degree of ramping (rise time) affects the formation of hotspots. Unfortunately, the experimental data base on rise time effects is sparse, and there are no empirical rules which can be used to predict the effect of rise time. Furthermore, the existing hot spot models must make many simplifying assumptions, so while they may be useful in a qualitative sense, they can not be used for quantitative predictions. Consequently, existing shock initiation models are inadequate to model ramp wave behaviour. Rise times as low as 1 microsecond will probably suppress shock initiation in most cases, but this will depend on the mean pore size in the explosive and other parameters. An additional complication is that ramp waves “shockup” as they propagate into the explosive, so the rise time at the back surface of the acceptor will not be the same as at the input surface. Thus a small rise time may serve only to delay, rather that prevent, initiation.

14.3 The protocol deals with these issues by first asking that the pulse shape be determined. Then it asks if the wave is sufficiently ramped to suppress hotspot formation. Unfortunately, this is a question which cannot be answered at present by any method other than experiment (and even then interpretation of the results may be difficult). If the answer is yes, the protocol assumes that the compression wave is equivalent to a shock and branches to the protocol for closely space unbuffered rounds (point A). If the answer is no, the protocol asks whether the pulse “shocks up” while it is still in the explosive, If the answer is yes, it is assumed that the pulse acts like a shock, and the protocol branches to the unbuffered protocol at point A. If the answer is no, it is assumed that shock initiation will not occur, but all of the other mechanisms which are considered by the unbuffered protocol are still possible, so the protocol branches to the unbuffered protocol at point B. Since buffers mitigate shock initiation, the “non-shock” mechanisms discussed above are probably more important in the buffered case than in the unbuffered case.

14.4 **A single buffer which is separated from both donor and acceptor by large air gaps.** In this case the fragments from the donor round form normally. The buffer reduces their mass and velocity, and it may deflect some so that they don’t hit the acceptor; but the situation may be treated using the Bullet/Fragment Impact Protocol.

14.5 **There is a buffer in contact with both donor and acceptor, but there is an air gap in between.** In this case, the presence of the buffer may affect the fragmentation of the donor round. The size and velocity of the fragments may be different (they are likely to be bigger and slower) than they would be without a buffer. When the modified fragments hit the acceptor, the buffer there will attenuate the impact shock and reduce the possibility of shock initiation. This phenomenon is treated in the One on One (unbuffered) protocol, so the SD Protocol branches to the One on One (unbuffered) protocol at this point.

Single Donor/Multiple Acceptor Tests, With Or Without Confinement

15. This category includes the case where one round in a large stack detonates or where one round in an ammunition compartment detonates. All of the considerations discussed in the previous category apply, but other considerations are necessary. The fact that a certain round, with or without a buffer, passes a one-on-one sympathetic detonation test does not mean that it will not sympathetically detonate in a stack or in the confinement of a compartment. Some specific examples of this are discussed below. The One on Many protocol (Figure E-5) starts by evaluating the one-on-one situation, and then addresses the additional factors which are described below:

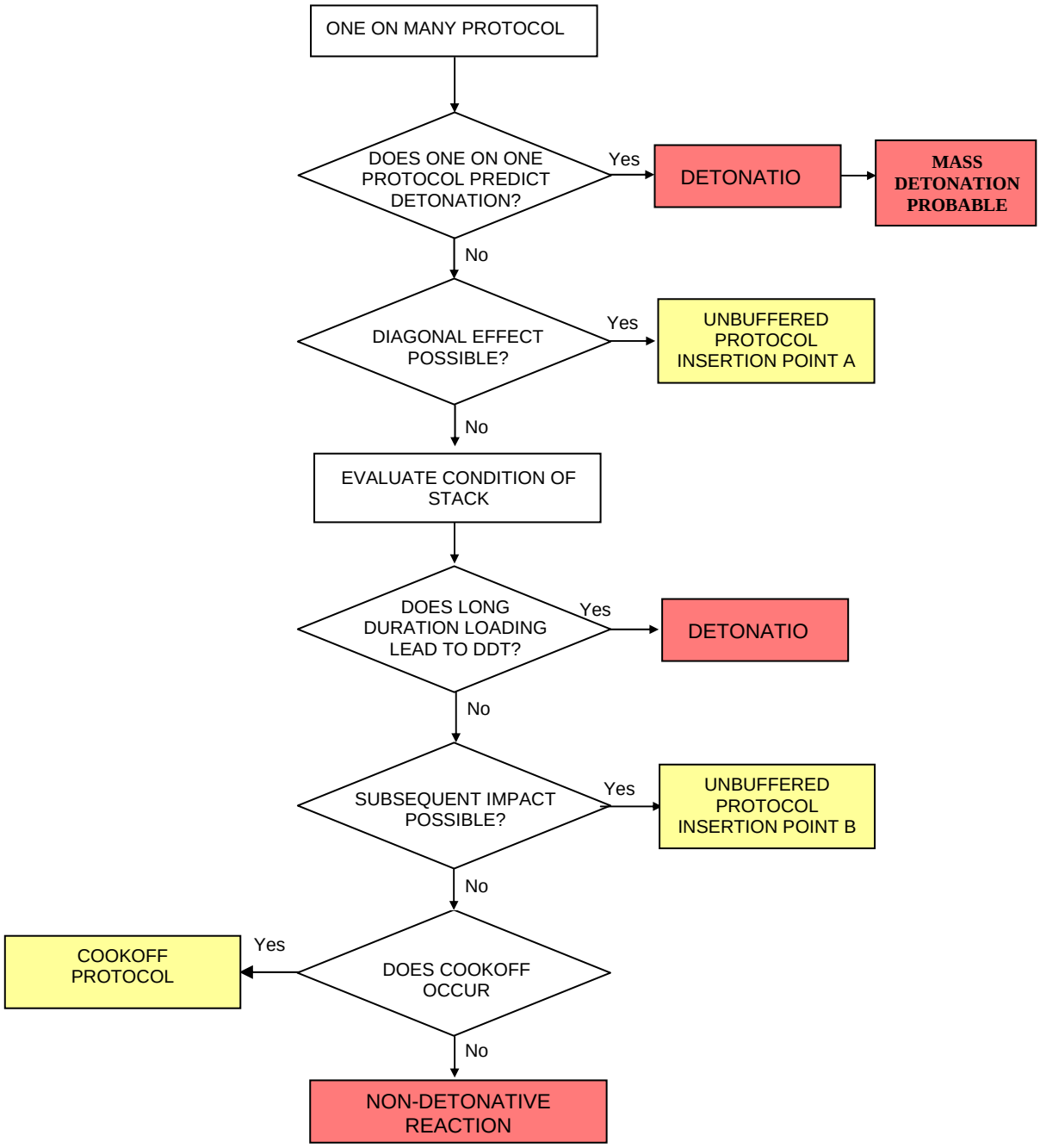

Figure E-5 One on Many Protocol

15.1 **Fragment focusing effects**. Fragment focusing must be considered when one tries to move from one-on-one tests to larger arrays.

15.2 **Subsequent impacts**. In these types of experiments, there are many opportunities for initiation by recompression (XDT). A round may be damaged by the impulse from the donor and then recompressed when it slams into an adjacent round or the wall of a compartment. Alternatively, a round may be damaged by the impulse from the donor, and recompressed when another acceptor round reacts in a low order (non-detonative) fashion. The multiply shocked round might then detonate.

15.3 **Long duration loading (the effect of compartment confinement and venting).** Ammunition compartment tests have shown that the strength of the compartment, the size and location of the vents, and the presence of gun propellant can affect the propagation of detonation between warheads. Furthermore, the failures that occurred in compartment testing frequently involved reactions which were delayed by times of several hundreds of microseconds or even several milliseconds. These times are much too long for shock initiation.

15.4 Detailed understanding of these types of events is almost totally lacking. The multiple stimuli effects mentioned above may be involved. If the rounds closest to the donor in a stack do not detonate immediately, they will nevertheless be crushed, damaged, and perhaps broken open. The crushed and damaged material may burn, and the rate at which it burns is determined by the pressure level and by the extent of the damage induced surface area. Confinement in a compartment will keep the pressure high and will increase the burn rate. The presence of propellant, even if the propellant doesn't detonate itself, will do the same thing. Thus all of these factors may facilitate a deflagration to detonation transition. It will be very difficult to develop criteria for the occurrence of this type of event, and there is certainly a data gap in this area.

15.5 **Cook-off**. If the rounds do not detonate immediately, they may be exposed to a fire. If a round detonates as a result of cook-off, sympathetic detonation may now be possible because the stack has been significantly altered as a result of earlier events.

15.6 **Mass reaction versus propagation to a few acceptors.** If sympathetic detonation occurs promptly in the nearest neighbours, there is little doubt that it will propagate throughout the stack. In other cases, one must evaluate whether the circumstances causing sympathetic detonation are peculiar to a few rounds in the stack and whether further propagation will occur (in the chart, the protocol branches back to the beginning to indicate this evaluation).

Multiple Donor/Multiple Acceptor Tests

16. This category involves tests where a whole stack of donors detonates, and the objective is to see if an adjacent stack will detonate. Once again all of the considerations given above apply, but some additional considerations are necessary. The protocol goes through the additional considerations, which are described below, and then branches back to the one-on-many protocol.

16.1 **Alternation of fragment sizes, velocities and spatial distribution**. When a whole stack detonates, the velocity, size, and spatial distribution of the fragments may be altered significantly from what they would be for a single munition. When two adjacent warheads detonate, an interaction zone forms between them which produces a concentrated jet of fragments at velocities which greatly exceed the velocity of the fragments from a single warhead. The number of fragments is also enhanced in these directions. When an array of donor munitions is initiated by "natural communication" (one round is initiated and the rest initiate sympathetically), the mode of fragmentation is altered, as compared with the detonation of a single munition, and very large fragments are formed and projected in certain directions. The fragment spray from the interaction areas probably presents the worst case for sympathetic detonation, but the larger fragments could be important in some situations.

16.2 **The impact of the buffer, if any, on the acceptors.** If a buffer is used in this type of test, it may be propelled at considerable velocity into the acceptors and may cause initiation of the acceptors by shock initiation or by massive crushing

16.3 **Effect of long duration stimuli**. This effect has already been discussed as part of the one-on-many protocol, but it can be particularly significant in these large scale tests.

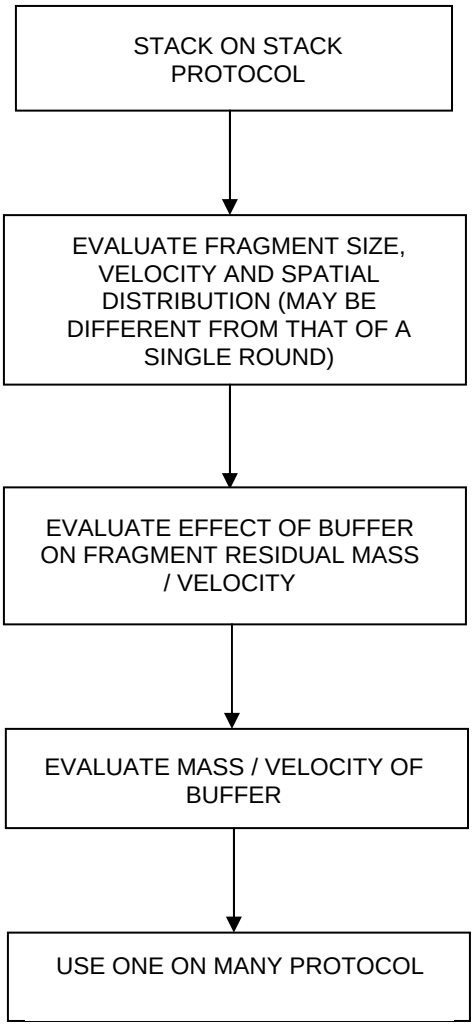

Figure E-6 Stack on Stack Protocol

TABLE E-1 Examples of tools available and data required to analyse sympathetic reaction paths

KEY FACTORS/ REACTION MECHANISMS	TOOLS FOR ANALYSIS	PROPERTIES REQUIRED
Shock to Detonation Transition (SDT)	Gap Test Wedge Test Critical Diameter Test Plate Impact Test	Scaling Effects Fragment Characteristics Shock Pressures Shock Duration Pop Plot Design Dependent
Penetrate Case / Severe Distortion	Mechanical Properties of Case and Projectile at High Strain Rate Projectile Physical Characteristics (Velocity, Geometry, Mass)	Mechanical Properties of Case and Projectile Geometry and Ballistics of Projectile Ballistic Limit for Case Projectile Break-up and Resulting Fragment Characteristics Design Dependent
Hit Bare EM	No Small Scale Tests Proposed	Design Dependent
Bore Effect / Finnegan Effect / SDT	Burn-to-Violent-Reaction (BVR) Subscale Component Testing High Velocity Shotgun Test High Strain Rate Mechanical Properties Testing Pick-up Test (Reaction Acceleration)	Shock Hugoniots of Energetic Materials and Impactor Damage Dependency
Reflected Shock Possible	Plate Impact Test	Munition Design Issue
XDT	Shock Test Damaged Material Double-shock Gap Test High Strain Rate Mechanical Properties Testing High Strain Rate Fracture Mechanics Testing	High Strain Rate Mechanical Properties Testing High Strain Rate Fracture Mechanics Testing

KEY FACTORS/ REACTION MECHANISMS	TOOLS FOR ANALYSIS	PROPERTIES REQUIRED
Ignition	DSC Temperature of Ignition Hot Ball Test / Hot Fragment Conductive Ignition Friction Sensitivity Mechanical Properties Testing at Relevant Strain Rates Fracture Mechanics Testing at Relevant Strain Rates	High Strain Rate Mechanical Properties Testing High Strain Rate Fracture Mechanics Testing Kinetics and Thermochemistry of EM Decomposition as a Function of Temperature and Pressure
Significant Material Damage	Friability (Shotgun Test) Tube Test Hopkinson Bar Fracture Mechanics Testing (Fracture Toughness)	Material Properties and Fracture Toughness at Appropriate Strain Rates (Fracture Mechanics Properties) Additional Surface Area Generation
Sufficient Venting	Mechanical Properties Testing Burn Rate (at High Pressure) Projectile properties (Velocity, Geometry, Mass, Orientation) Close Bomb Test Ballistic Limit Testing	Highly dependent on munition design High Strain Rate Mechanical Properties Testing Effect of Confinement
Layered Burning (normal surface regression)	Burn Rate (Strand Burner) Closed Bomb Burning Tube Tests Small Scale Motor Tests	Burn Rate as a Function of Temperature and Pressure
Propulsion	No Small Scale Tests Proposed	Dependent on Munition design

TABLE E-2 .Examples of tests that can be used to generate the data required in Table C-1

PROPERTIES	TESTS TO BE CARRIED OUT	GENERAL POINTS
Porosity	Density Measurements	
Pore Size	Refractive Matching Fluid Atomic Force Microscopy Scanning Electron Microscopy (SEM)	
Particle Size	AOP-7 test category 102-02-xxx Microsonic Techniques	
Crystal Quality	SEM Microscopical Techniques X-ray Diffraction Density measurement test	
Burn Rate	Strand Burner Closed Bomb Hybrid Combustion Bomb	Required as a function of temperature and pressure
Burn Rate (Damaged Material)	Strand Burner Closed Bomb Hybrid Combustion Bomb	Not measured routinely Highly dependent on damage characteristics - (Thermal or Mechanical)
Friability: propensity to fracture/damage	Shotgun Test (Friability Test) Bullet Damage Test Hopkinson Bar Failure Modulus Taylor Impact Test Fracture Toughness	
Damage Characterisation	Sectioning Microscopy X-ray Tomography Closed Bomb (Surface Area) Neutron and X-ray Diffraction Coefficient of Thermal Expansion	Fractures Porosity Dewetting Chemistry
Constitutive Properties and Related Tests	DMA (TG, Modulus, Elastic Properties) Uniaxial Tensile/Compressive Testing (Low Strain Rates) Servohydraulic Mechanical Test (at Rates up to 10^4/s Hopkinson Bar (at Rates up to 10^4/s) Parallel/Oblique Tests or Combined Pressure Shear (at Rates up to 10^6/s) Flyer Plate Impact Test (at Rates up to 10^6/s) (uniaxial strain).	Stress is a function of strain, strain rate, temperature and pressure

PROPERTIES	TESTS TO BE CARRIED OUT	GENERAL POINTS
Chemistry	Tests to determine Arrhenius kinetics (low pressure decomposition) DSC Mass spectroscopy Adiabatic bomb calorimeter ODTX	Fast decomposition (μs) Slow decomposition (min) Very slow decomposition (Ageing) Arrhenius kinetics Activation energy Heat of reaction Parameters for chemical purposes Thermal expansion Compatibility issues in environment of IM tests
Bond Strength	AOP-7 test series	
System Properties		Geometry and physical size Loading density External confinement Gas tightness Free volume Casing type

ASSESSMENT OF SHAPED CHARGE JET IMPACT

Overview

1. Reaction of a munition to the shaped charge jet impact stimulus occurs because there is either direct shock initiation (SDT), bow shock initiation (BSDT) or ignition of damaged energetic material as the jet passes through the energetic material. While a very wide range of shaped charge jet impact scenarios are possible in hazard situations, for the purposes of IM these are simplified to two generic categories, broadly representative of Rocket Propelled Grenades and top attack bomblets.

2. The principal factors affecting the response to such a stimulus are its shock sensitivity under confined conditions, the degree of confinement of the energetic material, the level of energetic material damage and the propensity for the energetic material to undergo Deflagration to Detonation Transition (DDT).

3. Table F-1 identifies tests and tools that are pertinent to each of the decision points in the protocols and the materials properties required to assist in the modelling or prediction of the results of such tests. Table F-2 gives examples of tests that can be used to determine values for the properties identified in Table F-1. These tables are neither exhaustive nor exclusive, and users of the protocols should seek to use the most up to date and well validated tools available to them.

The Shaped Charge Jet Impact Hazard Protocol

4. It has not proved possible to generate a simplified protocol for the assessment of Shaped Charge Jet Impact hazard. The complexity of the problem, coupled with the level of detailed mechanistic understanding that exists, has led to the development of a detailed protocol that is broken down into five parts for ease of use.

5. The protocols presented here are based on the original TTCP protocol, with modifications proposed by the group of experts at the NIMIC workshop on Shaped Charge Jet Impingement (1996).

6. These protocols, Figures F-1 to F-5, present the hazard assessment protocol logic in a form that captures the detailed response mechanisms.

Notes on the SCJ protocols

7. The general principles the reaction mechanisms are generally understood. The dynamic interaction of a hypervelocity jet and a bare, lightly covered or heavily covered HE can result in two types of shocks:

a. **The Impact shock.** This is the non-steady shock produced by the initial impact of the jet on a surface and transmitted to the HE either directly (if bare) or through a thin cover plate.

   Pressures at this initial point of contact can be in excess of one megabar. Initiation occurs immediately after impact within a few millimetres of the explosive surface or does not occur by this mechanism. The shock pressure is quickly weakened by rarefactions entering from the boundaries at local sound velocities. The related reaction mechanism is the Shock to Detonation Transition (SDT).

b. **The Bow shock.** This is the steady shock appearing only when the jet penetrates a material, in this case an explosive, at supersonic speeds. Its velocity is equal to the penetration rate.

The bow wave forms a shock front followed by a ramp wave towards the theoretical Bernoulli pressure at the interface with the jet tip. If the cover is more than a few jet diameters thick, the impact shock is attenuated before it reaches the explosive and the bow wave from the jet penetrating the explosive becomes the dominating mechanism for initiation.

Under certain conditions and a certain distance (the distance for the bow shock to set-up in the explosive and the explosive to be initiated), this shock can initiate the explosive. For bow waves below the critical condition, the explosive does not detonate. The jet penetrates through the explosive with the bow wave causing disruption and/or reaction. The related reaction mechanism is the Bow Shock to Detonation Transition (BSDT).

8. In the original TTCP WAG-11 protocol only continuous jets and first impact fragments from particulated jets were taken into account:

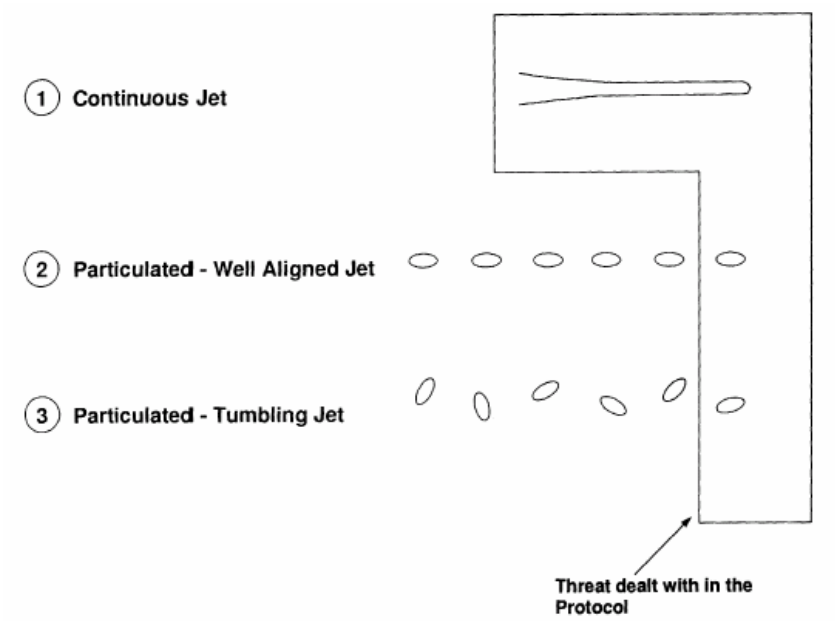

Figure F-1: Threats dealt with in the WAG-11 protocol

9. The principle modifications to the original WAG-11 protocols are as follows:

a. Adding a protocol taking into account multiple impacts. This protocol is referred to as the Shaped Charge Jet Multiple Impact Protocol (now Part 5 of the SCJ Impact Protocol).

b. Mixing and modifying the Bare/Thinly Covered Solid EM Branch (formerly Part 2) and the Thickly Covered Solid EM Branch (formerly Part 3) of the original WAG-11 SCJ Impact Hazard Protocol. This was done by considering the overall reaction mechanisms rather than the detailed criteria for each mechanism (new Part 2 of the SCJ Impact Protocol).

c. By doing so, the uncertainty concerning:

- The ratio critical diameter / sample diameter (d_c/d_s)
- The ratio critical diameter / jet diameter (d_c/d_j)
- The V^2d or u^2d configuration dependant values
  is removed, and the necessity to perform lots of tests to determine the V^2d values for the various configurations disappears.

d. **Adding a liquid energetic materials branch in the entrance** (Figure F-2, Part 4 of the SCJ Impact Hazard Protocol). No specific protocol is proposed due to the lack of knowledge in this field.

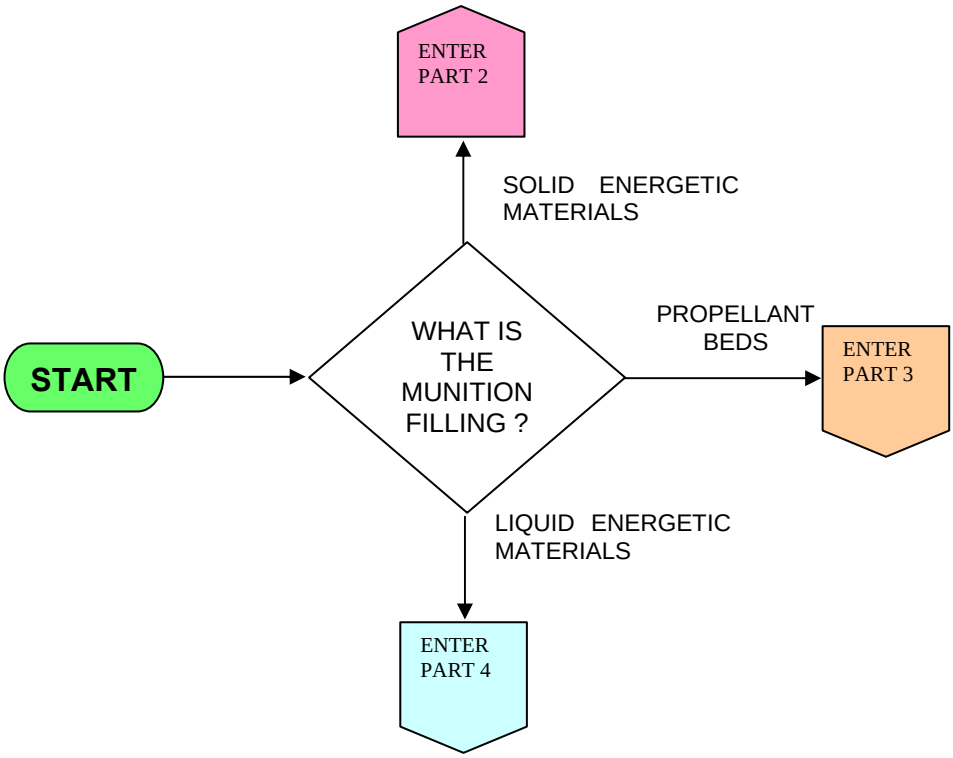

Figure F-2: Shaped Charge Jet Impact Hazard Protocol - Entrance (Part 1)

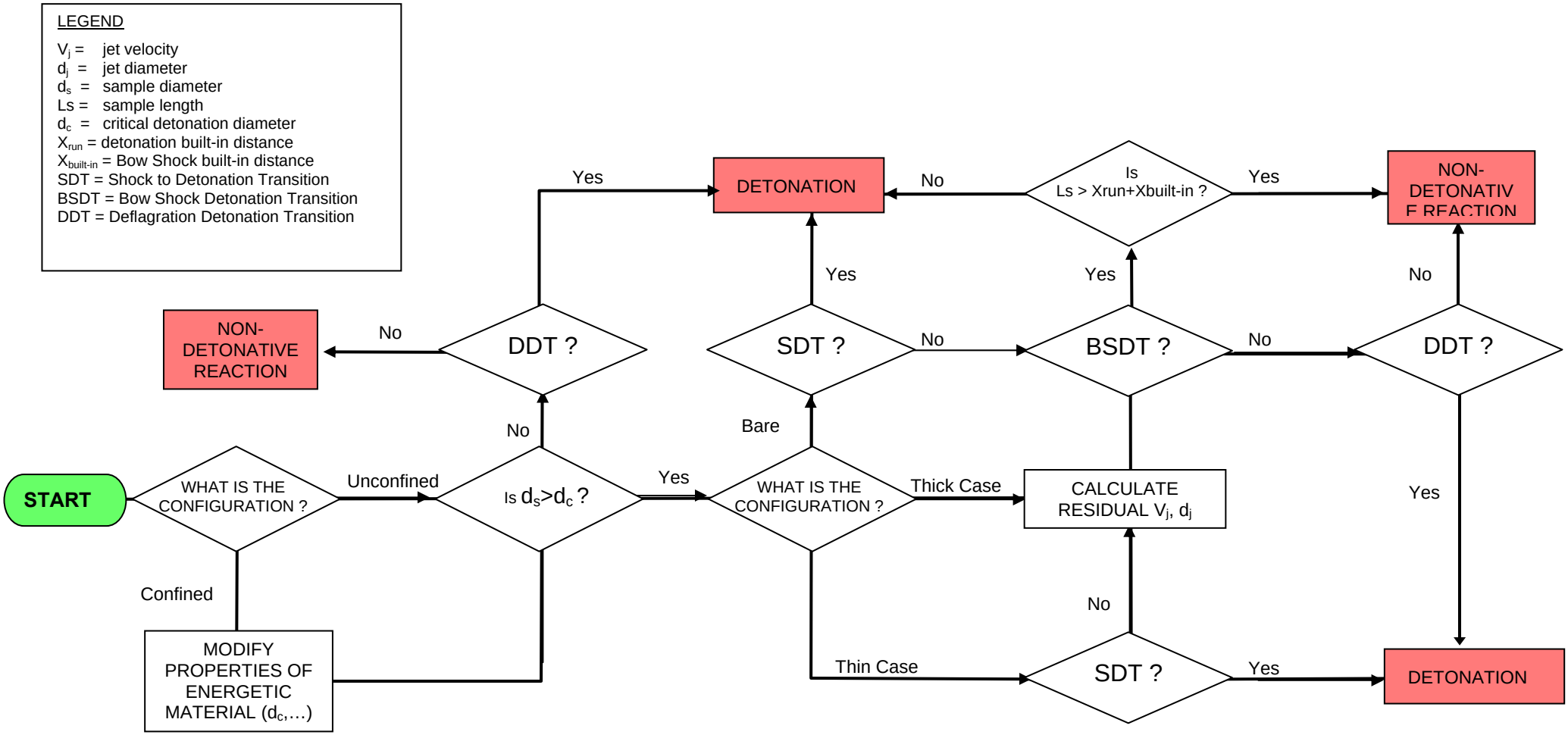

Figure F-3: Shaped Charge Jet Impact Hazard Protocol – Solid Energetic Materials branch (Part 2)

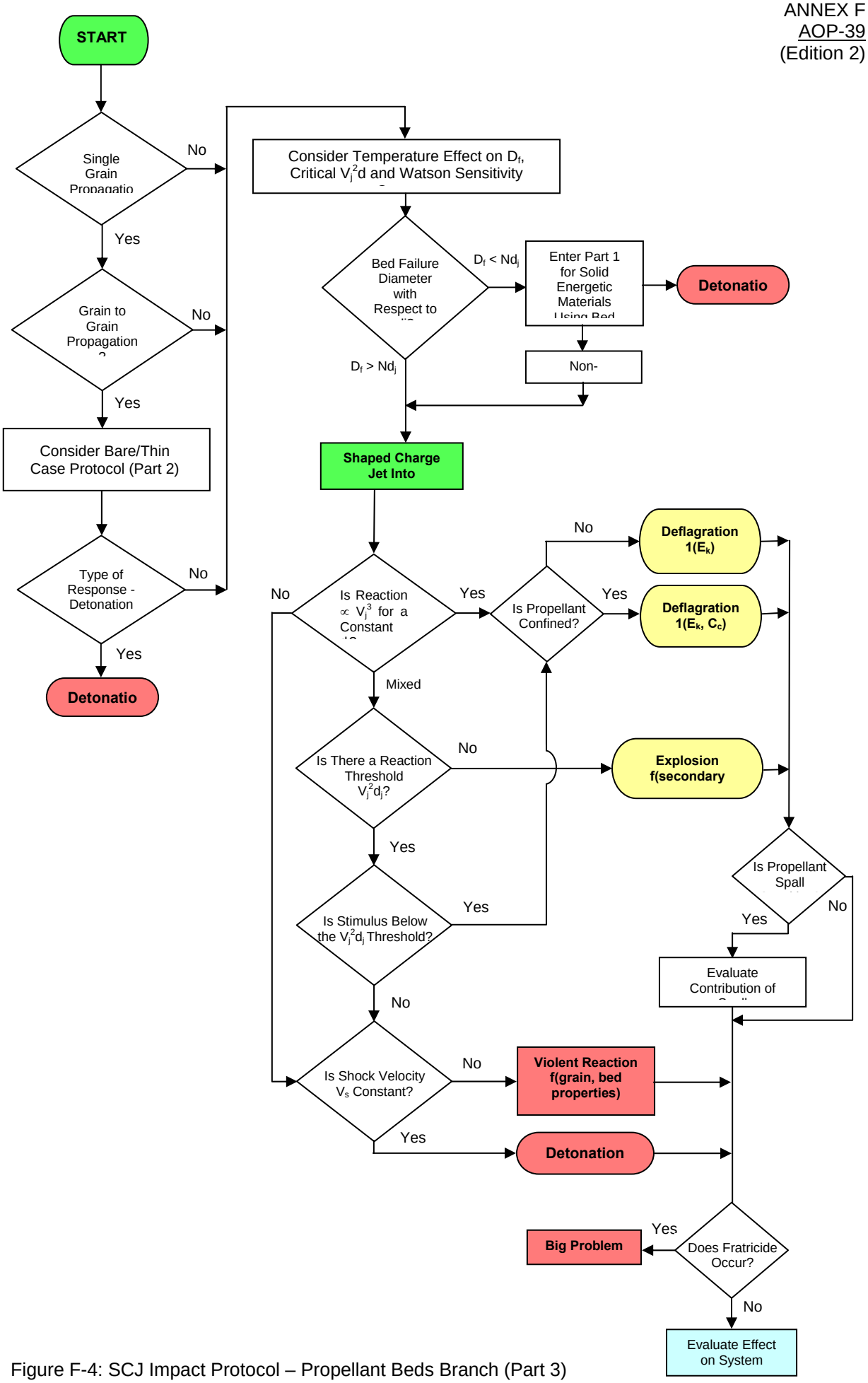

Figure F-4: SCJ Impact Protocol – Propellant Beds Branch (Part 3)

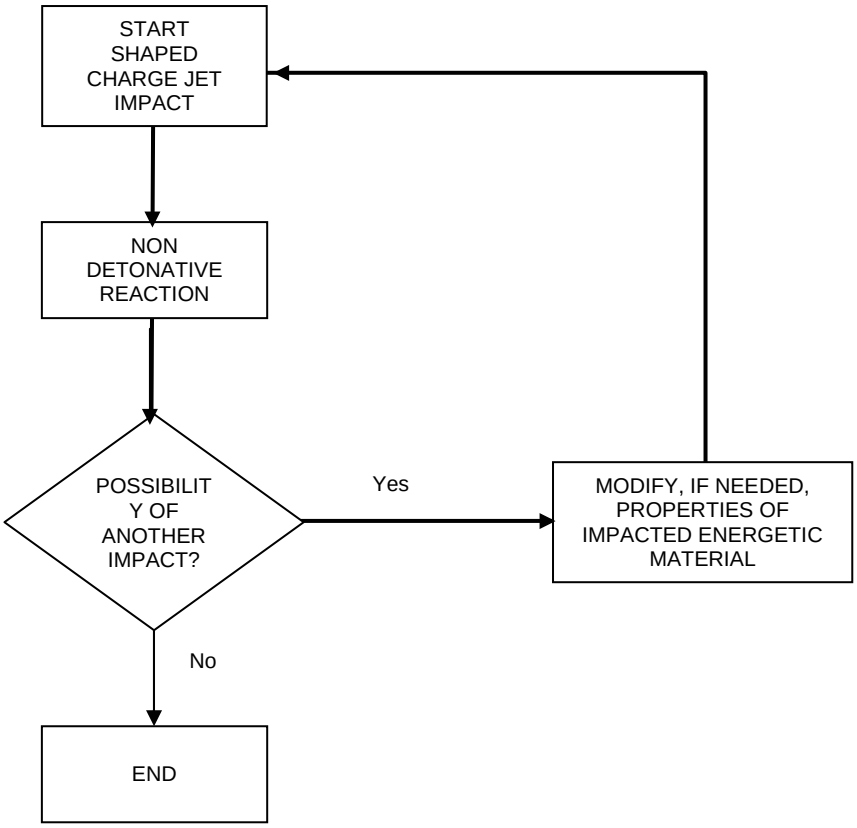

Figure F-5: Shaped Charge Jet Multiple Impact Protocol (Part 5)

TABLE F-1 Examples of tools available and data required to analyse bullet/fragment impact reaction paths

KEY FACTORS/ REACTION MECHANISMS	TOOLS FOR ANALYSIS	PROPERTIES REQUIRED
Shock to Detonation Transition (SDT)	Gap Test Wedge Test Critical Diameter Test Plate Impact Test	Scaling Effects Fragment Characteristics Shock Pressures Shock Duration Pop Plot Design Dependent
Penetrate Case / Severe Distortion	Mechanical Properties of Case and Projectile at High Strain Rate Projectile Physical Characteristics (Velocity, Geometry, Mass)	Mechanical Properties of Case and Projectile Geometry and Ballistics of Projectile Ballistic Limit for Case Projectile Break-up and Resulting Fragment Characteristics Design Dependent
Hit Bare EM	No Small Scale Tests Proposed	Design Dependent
Bore Effect / Finnegan Effect / SDT	Burn-to-Violent-Reaction (BVR) Subscale Component Testing High Velocity Shotgun Test High Strain Rate Mechanical Properties Testing Pick-up Test (Reaction Acceleration)	Shock Hugoniots of Energetic Materials and Impactor Damage Dependency
Reflected Shock Possible	Plate Impact Test	Munition Design Issue
XDT	Shock Test Damaged Material Double-shock Gap Test High Strain Rate Mechanical Properties Testing High Strain Rate Fracture Mechanics Testing	High Strain Rate Mechanical Properties Testing High Strain Rate Fracture Mechanics Testing

KEY FACTORS/ REACTION MECHANISMS	TOOLS FOR ANALYSIS	PROPERTIES REQUIRED
Ignition	DSC Temperature of Ignition Hot Ball Test / Hot Fragment Conductive Ignition Friction Sensitivity Mechanical Properties Testing at Relevant Strain Rates Fracture Mechanics Testing at Relevant Strain Rates	High Strain Rate Mechanical Properties Testing High Strain Rate Fracture Mechanics Testing Kinetics and Thermochemistry of EM Decomposition as a Function of Temperature and Pressure
Significant Material Damage	Friability (Shotgun Test) Tube Test Hopkinson Bar Fracture Mechanics Testing (Fracture Toughness)	Material Properties and Fracture Toughness at Appropriate Strain Rates (Fracture Mechanics Properties) Additional Surface Area Generation
Sufficient Venting	Mechanical Properties Testing Burn Rate (at High Pressure) Projectile properties (Velocity, Geometry, Mass, Orientation) Close Bomb Test Ballistic Limit Testing	Highly dependent on munition design High Strain Rate Mechanical Properties Testing Effect of Confinement
Layered Burning (normal surface regression)	Burn Rate (Strand Burner) Closed Bomb Burning Tube Tests Small Scale Motor Tests	Burn Rate as a Function of Temperature and Pressure
Propulsion	No Small Scale Tests Proposed	Dependent on Munition design

TABLE F-2 .Examples of tests that can be used to generate the data required in Table C-1

PROPERTIES	TESTS TO BE CARRIED OUT	GENERAL POINTS
Porosity	Density Measurements	
Pore Size	Refractive Matching Fluid Atomic Force Microscopy Scanning Electron Microscopy (SEM)	
Particle Size	AOP-7 test category 102-02-xxx Microsonic Techniques	
Crystal Quality	SEM Microscopical Techniques X-ray Diffraction Density measurement test	
Burn Rate	Strand Burner Closed Bomb Hybrid Combustion Bomb	Required as a function of temperature and pressure
Burn Rate (Damaged Material)	Strand Burner Closed Bomb Hybrid Combustion Bomb	Not measured routinely Highly dependent on damage characteristics - (Thermal or Mechanical)
Friability: propensity to fracture/damage	Shotgun Test (Friability Test) Bullet Damage Test Hopkinson Bar Failure Modulus Taylor Impact Test Fracture Toughness	
Damage Characterisation	Sectioning Microscopy X-ray Tomography Closed Bomb (Surface Area) Neutron and X-ray Diffraction Coefficient of Thermal Expansion	Fractures Porosity Dewetting Chemistry
Constitutive Properties and Related Tests	DMA (TG, Modulus, Elastic Properties) Uniaxial Tensile/Compressive Testing (Low Strain Rates) Servohydraulic Mechanical Test (at Rates up to 10^4/s Hopkinson Bar (at Rates up to 10^4/s) Parallel/Oblique Tests or Combined Pressure Shear (at Rates up to 10^6/s) Flyer Plate Impact Test (at Rates up to 10^6/s) (uniaxial strain).	Stress is a function of strain, strain rate, temperature and pressure

PROPERTIES	TESTS TO BE CARRIED OUT	GENERAL POINTS
Chemistry	Tests to determine Arrhenius kinetics (low pressure decomposition) DSC Mass spectroscopy Adiabatic bomb calorimeter ODTX	Fast decomposition (μs) Slow decomposition (min) Very slow decomposition (Ageing) Arrhenius kinetics Activation energy Heat of reaction Parameters for chemical purposes Thermal expansion Compatibility issues in environment of IM tests
Bond Strength	AOP-7 test series	
System Properties		Geometry and physical size Loading density External confinement Gas tightness Free volume Casing type

FULL SCALE TEST PROCEDURES

Threat	Test STANAG number
Magazine/store fire or aircraft/vehicle fuel fire	STANAG 4240
Fire in an adjacent magazine, store or vehicle	STANAG 4382
Small arms attack	STANAG 4241
Fragmenting munition attack	STANAG 4496
Shaped charge weapon attack	STANAG 4526
Reaction propagation in magazine, store, aircraft or vehicle	STANAG 4396

CONDUCT AND REPORTING OF FULL SCALE HAZARD TESTS

INTRODUCTION

1. Undertaking full-scale IM testing is a complex and expensive process and assessment of the response requires detailed data and expert judgement. Experience has shown that there is a need to provide guidance and advice on the IM full-scale testing and assessment process in order to assist those involved and to improve standards and practices and to maintain them at a consistent high level.

AIM

2. The aim of this guide is to provide guidance on the best practices for designing, conducting and reporting full-scale IM tests.

USERS OF THIS GUIDE

3. This guide is written for the wide range of users who are involved in full scale hazard testing and are responsible for the contracting, conducting, reporting and assessing of IM tests, including safety advisers, scientists, technologists and project staff; in test ranges, industry and at research establishments.

LAYOUT OF THIS GUIDE

4. This guidance is divided into the 3 chronological steps of designing an IM test programme, conducting the trial, and reporting the trial. It also provides guidance on the IM assessment process so far as those involved in designing, conducting and reporting trials are aware of the information needed by those who are responsible for the subsequent assessment of the results. The guide includes a template for reporting IM tests and a list of the issues which need to be considered in designing each of the 6 IM tests.

WHY IM TESTING IS DIFFERENT

5. IM testing differs from all other ordnance and munitions safety testing in that the pass criterion for each test involves an explosive response. For all other safety testing, the pass criterion is that there should be no explosive response at all and the munition is expected to remain safe, either for use or for disposal; it is relatively straightforward to assess whether that criterion has been satisfied. For IM testing, the reaction of the munition under test may range from full detonation to no explosive reaction at all and the different levels of reaction have been classified by NATO as a series of 'Reaction Descriptors', Type I to Type V, which are listed and defined in STANAG 4439.

6. The difficulty in full-scale IM assessment is in determining which level of explosive response occurred. Whilst it may be relatively straightforward to determine whether a full detonation or simple burning took place, differentiating between the intervening categories of partial detonation, explosion and deflagration is far from straightforward and requires specific evidence, generally of a quantitative nature, which must be evaluated by expert assessors.

PURPOSE OF IM TESTING

7. The primary purpose of full-scale IM testing is to establish the response of a munition to the unplanned stimuli defined in STANAG 4439 when tested under specified conditions. This information can then be used as evidence in the assessment to determine whether the munition is IM-compliant.

8. However, there are additional reasons for conducting full-scale IM testing which make an important contribution to the assessment of safety of a munition.

9. IM testing provides a measure of the explosive output from the munition's response to each particular threat. This enables an assessment to be made of the likely collateral damage from the munition's reaction which can be used to evaluate the risk posed by the response of the munition and to inform appropriate mitigation and risk reduction measures.

10. Other purposes of full-scale IM testing include:

- Evaluating the effectiveness of external mitigation concepts such as packaging and barriers.

- During development and technology demonstrator programmes, to establish the IM characteristics of specific design concepts.

11. It is important to note that whilst IM assessment is based on the full body of evidence, full-scale testing is a key component of the assessment process. Because only a very small number of full-scale tests are conducted, the results of which do not have statistical significance and which may not be repeatable, it is essential to take account of the characteristics of the energetic materials and the munition's design, small-scale and component level test results, modelling and theoretical analyses and read across from similar designs. These will provide a good indication of the likely result of full-scale testing. Full-scale testing should thus be seen as a means of confirming the predicted response based on the body of evidence.

12. Full-scale testing also ensures that any full-scale effects which are difficult to model or reproduce at the small- or sub-scale level are properly addressed in the testing and assessment process. It follows that there should be reasonable confidence in the likely outcome of every full-scale test before it is undertaken. This will also play an important role in the design of the test and the selection of appropriate instrumentation.

13. There may also be occasions when there is sufficient evidence from laboratory, small scale and component level testing, energetic material characterisation, modelling and read across, to provide a high level of confidence in the predicted outcome of full-scale testing. In such cases, it may not be necessary or appropriate to conduct a full-scale test and advice should always be sought from the National Authority. This has particular relevance to high cost munitions where there will be a requirement to minimise the number of test items.

IM AND HAZARD CLASSIFICATION

14. The full-scale tests used for IM assessment are also applicable to Hazard Classification. In the past, IM and Hazard Classification tests have been carried out independently. It has been recognised that this is inefficient and wasteful of resources and the objective today is to test once only for both purposes. Thus in developing a trial specification for IM testing, it is essential to take account of Hazard Classification test requirements. The initial review of test plans should address both aspects. In the processes for undertaking IM testing that are described in this guide, it will be necessary to bear in mind the issues that will arise of achieving hazard classification through combined testing and to seek to obtain any supplemental details that are required.

THE TRIAL FRAMEWORK

INTRODUCTION

1. This section describes the key factors in setting out the trial framework. Clear objectives and responsibilities are essential to provide the basis for a successful IM test programme and must be established before proceeding to the detailed work of designing the individual tests within the programme.

SETTING OUT THE TRIAL FRAMEWORK

2. Determining Trial Objectives

2.1 The first step in designing an IM test programme is to make a clear definition of the trial objectives. Normally there will be 2 overall objectives: to determine the response of the munition to the IM stimuli and to demonstrate compliance with a Nation's IM Policy. These objectives are not the same. It is important to establish the response of the munition to the IM threats even if non-compliant. This information is needed for safety, risk and vulnerability assessment and to inform any mitigation measures which may be needed to reduce risk to As Low As Reasonably Practicable (ALARP).

2.2 There may also be a variety of additional reasons for undertaking full-scale IM testing. Examples include:

- To determine time to response.
- To determine the effectiveness of different types of packaging and mitigation schemes.
- To determine the IM response of alternative filling and fuzing compositions.
- To determine the IM response using different munition design characteristics such as case material, case thickness, coatings and barriers, initiating devices, venting devices.

2.3 The trial objectives should also state how the results are to be assessed, who by, and define the acceptance criteria. For full-scale tests to demonstrate compliance with a Nation's IM Policy, the acceptance criteria will be achievement of a response against each relevant IM threat no worse than as stipulated in STANAG 4439.

3. Formation and Duties of Trials Planning Group

3.1 A project-based Trials Planning Group (TPG) will normally be established by the design authority at the outset of each munition programme. This should include representation from the project team, the relevant safety authority and, where appropriate, relevant specialists from research establishments and the test facility. The TPG will provide a collective overview of, and input to, all tests and trials relevant to IM and will contribute to ensuring that a full body of evidence is obtained from which both achievement of the contracted levels of IM compliance and compliance with the nation's IM Policy requirements (if different) can be assessed.

3.2 The activities of the TPG should extend to ensuring a Trials Readiness Review is held, ideally for each trial, to ensure that all aspects of the testing are sufficiently established to the satisfaction of all stakeholders and the tasking to the test agency has been effective in communicating the many items of detail involved. A trials compliance check sheet is a useful document for all concerned at the Trials Readiness Review. This gives satisfaction to all involved, not only the tasking and tasked staffs, that the trials and data collection are to be conducted as agreed, including allowing any waivers or amendments to original requirements to be recorded.

4. Responsibilities of the Project Team

4.1 The project team is responsible for ensuring that the contractor's IM test plan will provide sufficient evidence from which assessment can be made both of compliance with the contract requirements for IM and of compliance with the nation's IM policy requirements.

4.2 The project team is responsible for submitting the IM full-scale test plan to the National Authority for review before full-scale testing takes place and for presenting the results for formal assessment on completion of testing. This should normally take place within 3 months of an individual test or, for a test programme, within 3 months of completion of the final test in the programme. In addition to the test results, the national authority will require additional information on the munition's design, energetic materials and function. The project team is therefore responsible for providing guidance to the munition contractor on the application of this guide.

5. Responsibilities of the Test Agency

5.1 The test agency is responsible for carrying out the IM test programme in accordance with the test plan. If it becomes necessary to deviate from the conditions/parameters stated in the plan, the test agency should seek the agreement of the project team, who as necessary will seek specialist advice from the national authority.

5.2 The test agency is usually responsible for writing the test report. Since the test report is the permanent record of what occurred and plays a vital role in the assessment of the result, it is essential that the test report is comprehensive and contains all the information necessary to make an objective assessment. Guidance on how to construct a test report is included in Appendix 1.

DESIGNING THE IM TEST PROGRAMME

INTRODUCTION

1. This chapter describes the key factors in designing the IM test programme. Clear and well-considered test plans are essential to a successful IM test programme and the more effort that is devoted to the planning stage, the greater the likelihood of a successful outcome.

USE OF SPECIFICATIONS/STANAGs

2. The starting point for any IM trial is the relevant test STANAG. It is important that the latest edition is used. Where a contract calls up an edition current at the time the contract was placed, but a later edition is issued before testing takes place, wherever possible the testing should be adjusted to take note of any changes reflected in the later edition.

SELECTION OF TEST ASSETS

3. Design Standard

3.1 For full-scale IM testing, which is undertaken at the end of the development cycle to establish compliance with the Nation's IM Policy and with contract requirements, the munition under test, and any packaging, should always be fully representative of the final design standard.

4. Live and Inert Components

4.1 Ideally, the munition under test should be the complete item. For example, the various components of the explosive train may have a significant effect on the response of the munition and omitting one or more may result in an unrepresentative response.

4.2 However, there is little point in destroying expensive electronic components if these will not have any influence on the test response. Thus such components can be replaced by thermally, mechanically and geometrically representative inert components, provided that the thermal characteristics of the test munition and the mechanical confinement of the explosive components remain unchanged.

4.3 Where a munition has a removable fuze (e.g. artillery shell), the decision to test with or without the fuze fitted will depend on the configuration appropriate to the threat assessment and life cycle. For stores with a fixed fuze, it is not normally acceptable to test with an inert fuze.

5. Use of Environmentally Conditioned Munitions

5.1 There is no specific rule whether the munition under test should be factory-fresh, un-aged and in pristine condition or whether the munition should have been subjected to some accelerated ageing and/or environmental conditioning. Both are acceptable.

5.2 Use of new munitions can provide a useful baseline whilst use of aged/environmentally conditioned stores may provide closer representation of the condition of the munition when likely to be exposed to the IM threats in-service. Guidance should always be sought from specialists.

PRODUCING TEST DIRECTIVES (INSTRUCTIONS)

6. The test directive contains all details and instructions necessary for successful completion of the IM testing and should stand alone. It is the responsibility of the munition Design Authority to produce the test directive, which will normally be submitted to the project team for approval as specified in the contract.

7. The project team should seek the advice of safety advisers and relevant technology specialists. It is the project team's responsibility to seek the review panel's endorsement of the test directive before the testing takes place.

8. Specifying Test Parameters

8.1 In developing the full-scale test parameters, use should be made of all available information from earlier development testing and analysis such as modelling, laboratory and small scale tests, component level tests, characterisation of the energetic materials and from read across of IM test results from other munitions with similar design characteristics.

8.2 This body of information should be used both to make an assessment of the likely response of the full-scale test and to determine specific test parameters and conditions. Where the appropriate test STANAG offers a choice between a standard and a tailored test, this information may relevant to deciding which to choose.

9. Establishing Test Configuration

9.1 The threat assessment should provide the necessary advice on the munition configuration to be adopted. There are also a number of practical considerations which affect the choice of configuration for IM testing which are discussed in the following paragraphs.

10. Packaged vs. Unpackaged

10.1 The size and NEQ of a munition is an important consideration in determining the configuration in which the munition should be tested.

10.2 For small stores, such as pyrotechnics, CADs and PADs, small arms and cannon ammunition, which normally spend most of the life cycle packaged and are only unpackaged at the point of use, testing against all IM threats should be done in the packaged configuration. It makes little sense to conduct a Bullet Impact test against a single bare 20 mm round, whereas a Bullet Impact test against a full container of 100 rounds provides valid information about the response of the munition in the configuration in which it is most likely to be exposed to the threat and the configuration from which the greatest risk of collateral damage is likely to result.

10.3 For larger munitions, the threat analysis will determine the required configuration; in some instances it may be necessary to conduct a particular test in both the packaged and unpackaged configurations. It is usual to test for impact threats against larger munitions unpackaged.

10.4 The ability to determine the response may also be a factor in determining whether to test packaged or unpackaged. For example, in the slow heating test, where the test item is enclosed in a test oven, which itself will mask some of the effects of any reaction, to test in the packaged configuration may render it impossible to make an accurate assessment of the reaction. In such cases, far more useful information may be obtained if the item is tested unpackaged even though this may not be the configuration indicated by the threat assessment.

11. Component Level or AUR

11.1 The decision whether to test at AUR or component level will depend on a variety of factors. The first is the size of the munition. Small munitions will invariably be tested as an AUR, usually packaged. It is only the larger munitions such as missiles, incorporating both warhead and motor(s), where the option to test at component level arises.

11.2 For the thermal threats (Fast and Slow Heating), it can be useful to conduct tests at component level so that the response of each major component can be clearly determined in isolation. However, there may be interaction between the components which would lead to a different response and therefore it is usual to conduct an AUR test as well.

11.3 For the impact tests (Bullet, Fragment and Shaped Charge Jet), it is standard practice to conduct the tests at component level and the most violent response is then ascribed to the AUR.

11.4 Sympathetic Reaction tests may be conducted at component level to determine the response and inform mitigation, for example to determine the need for mitigating barriers between missile warheads or between missile motors. However, AUR tests will normally also be required in the packaged configuration unless the response can be assessed with confidence from the component level tests. There are examples in which detonation of a donor rocket motor has caused the warhead of an adjacent munition to detonate and vice versa.

11.5 Additionally, it is always necessary to consider the effect of the energetic or mechanical reaction from the component which reacts first onto the other components in the missile, e.g. from warhead reaction causing motor initiation; or from functioning/arming resulting from flight or propulsion of the munition, etc.

11.6 Where it is decided to test at component level, it is important to ensure that the component is in a configuration representative of the AUR. For example, if a thermal test is to be conducted on a rocket motor, omitting the external structure around the nozzle and blast pipe may reduce mechanical confinement and allow the nozzle assembly to be ejected from the motor with a consequently less violent explosive reaction than if the nozzle assembly had remained in place.

TEST CONSIDERATIONS

12. Package to Package Propagation.

12.1 For sympathetic reaction, the objective is to establish both the level of response and whether there is propagation of reaction from one item to another. For smaller stores, the package can be considered at the "item" and the requirement is thus to assess package-to-package propagation. Too often, the test is only conducted with a single package which may provide inadequate information.

12.2 If the reaction effects are contained within the single package, then it is clear that there will not be package to package propagation and no further testing is needed. However, if there is disruption of the package, then the effect on adjacent packages will need to be tested and assessed.

13. Aim/Impact Points

13.1 For the impact tests (bullet, fragment and shaped charge jet) it is important to select appropriate aiming points. Bullet impact should normally be carried out against both the most sensitive component/energetic material (eg motor igniter, warhead booster) and against the main charge filling. “Most sensitive component” should taken to mean the component which, if exposed to the threat, is likely to lead to the most violent response of the munition. It is important to be realistic about probability of this component being struck by the threat; for a very small booster or initiator buried deep within the munition, the chances of this being struck may be remote and there may be little point in attempting to do so in a test. In such cases, it is far more relevant to attack the main charge filling.

13.2 It is also important to consider the likely response of the “most sensitive component”. For a rocket motor, if attacking the igniter can confidently be predicted to lead to ignition of the motor in the design mode, there seems little point in conducting a test just to prove the point. For fragment and shaped charge jet impact, it is the reaction of the main charge filling which is of concern, in particular whether it can be shocked to detonation, and there may be little point in attacking the booster or igniter. Every test must be evaluated separately, using advice from specialists, to ensure that appropriate aiming points are selected, with appropriate tolerances to reflect the difficulty of achieving absolute precision in aiming.

14. Method of Initiation

14.1 For Sympathetic Reaction, it is particularly important to select an appropriate means of initiating the donor munition.

- For warheads, detonation in the design mode is the normal procedure. This is often achieved by removing the safety and arming device and initiating the booster explosive electrically.
- For rocket motors, a shaped charge is normally used to attack the motor propellant through the casing.
- For non-detonable stores such as pyrotechnics and CADs and PADs, functioning of the donor in the design mode is appropriate.

15. Restraint and Tethering

15.1 Where it is expected that a munition may become propulsive as a result of the test stimulus, it is likely to be necessary to restrain the munition to minimise the hazard to the test range and personnel. There are various ways in which this can be achieved. For example, the munition can be contained within a cage or within a concrete block enclosure, the munition can be clamped to the test stand, or the munition can be restrained by some tethering device such as a steel chain or cable.

15.2 Whatever method is used, it is essential that the restraint does not influence the response of the munition in any way thus leading to a false result. Cages and barriers can influence or invalidate blast overpressure readings and can prevent accurate measurement of debris throw.

15.3 For missiles, it will normally be important to establish whether propulsion occurred and some measurement of thrust will be required; the method of restraining the test item must not prevent measurement of thrust and confirmation of propulsion.

16. Pre-Conditioning

16.1 Full-scale IM tests are normally undertaken on test items at ambient temperature, unless there are specific reasons for pre-conditioning the item at either a higher or lower temperature. Testing at high or low temperature may result in a different response, for example due to embrittlement at low temperature and softening of the energetics and weakening of the case at high temperature.

16.2 However, if the threat analysis shows that a particular threat is most likely to occur at a high or low temperature, then it may be appropriate to test at this temperature.

16.3 The thermal tests (Fast and Slow Heating) should always commence with the test item at ambient, noting that the slow heating test allows rapid pre-conditioning to a higher temperature as part of the test procedure. In this latter case, it is often most useful and effective to precondition the munition and the oven together.

17. Marking and Colouring

17.1 For Sympathetic Reaction, it is essential to be able to distinguish between the debris of donor and acceptor munitions. Consideration should be given to colour coding the acceptors, for example by painting the external surface of each acceptor munition a different colour.

18. Re-use of Test Item if No Reaction

18.1 For impact tests in which the test item has not reacted at all, it may be possible to reuse the test item for a further impact test. This will depend on the amount of disruption caused to the munition or case and consequent reduction in confinement of the energetic material.

18.2 If it is assessed that the bullet or fragment entry (and exit if appropriate) holes from the first test will have little effect on the results of a subsequent test, then the test item can be re-used.

SELECTION OF APPROPRIATE INSTRUMENTATION AND RECORDING

19. Fast Heating

19.1 In the fast heating test, it is necessary to measure the flame temperature, both to establish the starting point for measuring the time to reaction, taken from the time that the flame temperature reaches 550ºC, and to measure the average temperature from the time that 550ºC is achieved until all munition reactions are complete; The average temperature must exceed 800ºC for the test to be valid.

19.2 It is necessary to use at least 4 thermocouples with a sampling rate greater than 0.2 Hz.

19.3 The temperature from each thermocouple should be recorded throughout the test.

19.4 Type K thermocouples (nickel-chromium/nickel-aluminium conductors), sheathed in inert hermetically sealed insulation and capable of withstanding 1200°C, are typically used to measure test temperatures.

20. Slow Heating

20.1 In the slow heating Test, it is necessary to measure both the surface temperature of the test item and the air temperature within the test chamber.

20.2 Where it is possible to get access to the interior of the test item without altering the test item, interior temperatures should also be measured.

20.3 In general, there should be at least two thermocouples mounted in pairs on opposite surfaces of the test item, one each in the air space near the air inlet and exit, and one each in the air space on opposite sides of the test item that will be expected to react first.

20.4 Temperature from all thermocouples should be recorded as a function of time throughout the test, being sampled at least once per minute.

21. Thermal Flux

21.1 Although not mandated by the IM test STANAGs, the measurement of thermal flux is a very useful metric in establishing the collateral damage from the reaction of a munition. The 1997 NIMIC Workshops on IM Testing made the recommendation that, in addition to assessing response type,

thermal flux, fragment throw and blast overpressure at set distances (5 m, 15 m, 50 m) should be recorded to provide a quantitative measure of the collateral damage.

21.2 For small stores, where the heat flux will be significantly lower than for a large store, it is suggested that these distances should be reduced to 2.5 m, 5 m and 15 m. Two rows of thermal flux gauges should be sited orthogonally to record the heat output from the reaction of the test item.

21.3 In the fast heating test, it is recognised that the fire itself will generate significant thermal flux readings but it is often possible to identify any increase in the total flux due to the reaction of the test item.

22. Blast Overpressure

22.1 Blast overpressure is a key parameter in assessing response type, and should be measured in all IM tests.

22.2 It is important to estimate before the test the likely response of the munition and the associated blast overpressure so that gauges of appropriate scale can be used. It can also be useful to calibrate blast overpressure measurement by measuring the output of the detonation of a single munition; this will provide a baseline for comparison in subsequent IM tests and will identify the contribution of the donor munition in Sympathetic Reaction.

22.3 Blast overpressure gauges should normally be sited at 5, 10 and 15 m unless either a low-order response is expected or the munition under test has a small NEQ, in which case the distances can be reduced to 2.5 m, 5 m and 10 m. It is important to maintain these standard distances for siting the pressure gauges to provide a basis for comparison between tests and munitions.

22.4 At least 2 rows of blast overpressure gauges, sited orthogonally, should be used in every test, despite some of the IM test STANAGs not having made this a mandatory requirement.

22.5 In the Sympathetic Reaction test, it is important to site the blast gauges such that they have the greatest opportunity of recording the output from the acceptor(s) rather than from the donor.

23. Ionisation Probes

23.1 Ionisation probes can be used to measure the velocity of propagation of the reaction in a munition, which in turn can give an indication of whether a munition has detonated. This can also be useful in confirming that the donor munition in a Sympathetic Reaction trial has achieved full detonation.

23.2 However, the use of ionisation probes has limitations. For example, they are only effective in measuring the velocity of propagation when the reaction starts at a single point in a munition. In sympathetic reaction, for example, the acceptor munition will normally be impacted along its length by the shock, blast and fragmentation from the donor and it is unlikely to be possible to obtain any meaningful record of velocity of propagation.

23.3 The utility of ionisation probes in discriminating between lower order reactions is also less clear, and on their own it is unlikely that the probes will provide sufficient information to make any assessment.

24. Witness Plates

24.1 Witness plates can be extremely valuable in discriminating between reaction types. The amount of pitting, marking and indentation can show quite clearly whether a munition has detonated (many witness marks from the fragmentation of the munition case and deformation due to blast) or has experienced a lower order reaction (fewer witness marks, minimal deformation, through to no marking at all).

24.2 Witness plates also have the benefit of providing a permanent record which can be examined in detail after the test, and should be strong enough to withstand detonation of the test item.

24.3 The optimum material to use for a witness plate depends on the type and velocity of the expected fragments. For heavy munitions with steel walls, a steel witness plate with a thickness of at least 25 mm is recommended. However, for munitions with aluminium skins or very thin steel skins, an aluminium witness plate may provide better results. For munitions with plastic or composite skins, witness plates may not be useful.

24.4 It can be useful to site witness plates beneath and on 2 or 3 sides of the item under test, at a suitable stand-off distance. Normally, witness plates should not be in direct contact with the test item since this might alter the heat flow into the round and the confinement of the energetic material. Ideally, there should be at least 200mm between the witness plate and the test munition so as not to interfere with the uniform heating of the munition.

24.5 It is important not to screen other instrumentation such as blast overpressure gauges or to restrict the throw of debris, whilst at the same time being close enough to the test item to obtain a meaningful record of fragmentation and blast damage.

24.6 In Sympathetic Reaction tests, it is useful to position a witness plate adjacent to or beneath the donor as well as the acceptors, so that the witness damage from the full detonation of the donor can be compared with that of the acceptors.

25. Fragment Throw, Velocity and Mass

25.1 One of the key determinants in assessing response type is the size and mass of the debris and the distance it has been thrown from the site of the test. In a detonation reaction, the case of the munition will be shattered into very small pieces and projected considerable distances, and all energetic material will be consumed; as the response type reduces in severity, so the munition fragments will increase in size, the amount of unconsumed energetic material will increase and the distances over which debris is projected will reduce.

25.2 A detailed debris map is an essential element of the report of any IM test. The map should show the location of each significant item of debris, recording its identity, mass and distance thrown. In order to achieve this, it is essential that the test arena is cleared of all debris from previous tests before any test is performed. The surface of the arena should ideally be smooth and hard, such as concrete or rolled sand; if the arena is grass covered, it should be cut as short as possible.

25.3 Access to all areas of the arena is essential for debris plotting and identification. Where test arenas overlap with other range safety traces it will be necessary to co-ordinate test activities to ensure that the necessary access is obtained.

25.4 Once debris mapping is complete, the debris should be collected and photographed; where more than one munition has been tested, debris should be separated and grouped by individual munition. The total weight of debris recovered per individual munition should be recorded, so that it can be compared with the original weight of the test item.

25.5 Fragment size and velocity can also be measured using absorbent material, such as strawboards, fibreboards or soft plaster panels to catch the fragments without breaking them. It is usual to have a number of layers which can be separated after the test. The fragments can be recovered, identified and weighed and the depth of penetration can be used to calculate fragment velocity.

25.6 Strawboards (or equivalent) should be sited at set distances from the test item; 5 m and 15 m are recommended, to provide a standard. The strawboards should be sited on opposite sides of the test item along the axis representing the line of greatest fragmentation. For a bursting store such as an artillery shell, this will be at right angles to the body of the shell but for a munition which has a directional fragmentation pattern, it will be necessary to select an appropriate worst-case axis.

26. Photographs and Video

26.1 Photographic and video evidence is vital to assessment of IM response. High speed photography should be used for all trials so that the test can be played back for analysis after the test.

26.2 In siting the camera(s), it is important to ensure that the field of view will not be obstructed by any of the test facilities or instrumentation and that the field of view will include all necessary information. For example, if it is expected that a rocket motor under test will exhibit propulsion, it is important that the field of view includes an area to the rear of the motor nozzle so that it can be determined whether a plume with shock waves has formed.

26.3 Ideally, there should be one high speed video giving an overall view of the test arena, which will include capture of debris throw and a view of any fireball that forms, and a second video giving a close up view of the test item.

26.4 Still photography should be used to record the test set up before the test. This should include general shots of the test arena and test stand, close ups of the test item including, for packaged items, a shot of the contents of the container with the lid removed to show packing method and orientation of test items, and close ups of the test item(s) on the stand. For impact tests, include shots showing the aiming point.

26.5 Post test, still photography should be used to show the test stand and remains of the test item, close ups of the witness plates, of any craters formed and of all significant items of debris including unreacted energetic material. It is important that the debris in each photograph is clearly identified in the subsequent report.

27. Measurement of Thrust (for Propulsive Reactions)

27.1 Measurement of thrust has rarely been attempted in past IM tests. However, as munitions become increasingly IM compliant and burning reactions rather than explosive reactions become the norm, so the likelihood of a propulsive reaction from a rocket motor under test becomes greater.

27.2 It is important for assessment of safety to determine whether a motor does become propulsive and whilst the formation of a plume and shock waves is perhaps the clearest indication, measurement of thrust is important for those occasions when the visual indication is inconclusive. Examples of techniques to measure thrust include the installation of a pressure transducer in the motor suspension arrangement on the test stand or between the nose of the motor and the wall of the test chamber.

27.3 For fast heating tests, it is unlikely that electronic measurement devices will withstand the 850+ºC to which the test item is exposed; it may be possible to allow the motor to move a short distance on its stand to impact and indent a witness screen so that, from a measure of the depth of indent, the energy of the motor at impact can be calculated. This would probably require the motor to be restrained in some way (e.g. by a chain or steel cable or by being confined in a cage) to ensure that it did not leave the hearth, but the method of restraint must not affect the heat transfer to the munition or the confinement of the munition.

28. Sound

28.1 It is important to record the sound throughout the test. All explosive events will be accompanied by sound and these can help to differentiate between the sharp crack of a detonation and the more prolonged sound of an explosion

28.2 Sound is particularly valuable when the test item is obscured from view, for example by the smoke and flame from the fast heating hearth or by the slow heating oven, or when the item is being tested packaged and multiple events are occurring within the package. A microphone should therefore be placed at an appropriate distance from each test item to record the sounds of any reaction.

APPROVAL OF TRIAL SPECIFICATION

29. All IM test plans should be agreed by the national authority before testing takes place. The objective of this review is to ensure that all aspects of the test plan are in accordance with best practice and that the test will achieve its objectives.

30. It is the responsibility of the project team to submit the test plans to. The project team and will normally have consulted safety advisers and science and technology specialists in the development of the test plan, making the formal review a straightforward process. To enable proper consideration and to ensure that there is time to incorporate any changes which the review body suggests, it is important that the final test plans are submitted for formal review as early as possible and in good time before the Trials Readiness review and actual testing is due to take place.

CONDUCTING THE TRIAL

CONDUCTING THE TRIAL

1. The trial should be conducted in accordance with the trial directive in a methodical and structured manner. Most IM tests will result in the destruction of an expensive test item, require the gathering of a large amount of transient data and it may not be possible to repeat the test. It is therefore essential that all aspects are completed satisfactorily.

2. Site Layout and Pre / Post Test Clearance

2.1 The layout of the test site and instrumentation must conform with the trial directive. It is essential that any debris from previous tests is cleared from the site before testing takes place.

2.2 Consideration should be given before the test to the level of response expected and the likely size and distance that debris will be thrown to ensure that a sufficiently large area is cleared.

2.3 Ideally, the surface of the test site should be concrete or firm sand, to enable location of debris. Where the test site is grass covered, this should be cut as short as possible.

3. Instrumentation and Recording

3.1 Instrumentation should be set up as detailed in the trial directive.

3.2 It is important that all instrumentation is appropriately tested and calibrated before the test and that all cabling and wiring is adequately protected so that there is no risk of vital connections being cut by the effects of an explosive reaction from the test item and vital data being lost.

4. Witnessing the Test

4.1 The test will normally be witnessed by representatives from the manufacturer, the project team and by the safety advisor. The project team may invite appropriate specialists, representatives from the review body, independent safety auditors and from the research establishments, to attend and witness the test.

4.2 First hand information from those witnessing the test can prove very valuable the assessment process, and it is important that all witnesses make appropriate notes and records for subsequent input to the body of evidence which will inform the assessment process.

5. Verification of Compliance with Test Directive and Trial Objectives

5.1 It is essential that the test is conducted in accordance with the test directive; one of the responsibilities of the project team is to confirm compliance.

5.2 Where deviations from the agreed test directive or the procedure concurred at the Trial Readiness Review prove necessary, these must be approved on behalf of the review body by the appropriate project team representative, taking advice as necessary from the safety advisor and technical specialists.

REPORTING THE TRIAL

THE TEST REPORT

1. It is standard practice for the test agency to produce a report of the test. This report may stand on its own or it may form the key input to a report from the Contractor or the Trials sponsor.

2. Where the Contractor or trial sponsor produces a report, this should include comments and observations as appropriate on the test house report and include confirmation that the requirements of the test have been achieved.

3. In making an assessment of the response, the review body will need to review both the test house report and the Contractor or trial sponsor's report. An example of a test report layout and the minimum content to be included is at Appendix 4.

Report Writing

4. Once a full-scale IM test has been completed, the test report and the photographic/video records are all that remain from which to assess the level of response. Since some level of explosive response is expected from IM tests, unlike all other munitions safety tests where no reaction is expected, it is essential that full details of the reaction of the munition are included in order that an informed assessment of the response can be made.

5. The report is a key element of the audit trail for the IM assessment which is likely to be referred to over the life of the munition and it must therefore contain information which is relevant, adequate, accurate and unambiguous.

Instrumentation Records, Measurements and Observations

6. All instrumentation records, measurements and observations (including those by witnesses) must be retained after the test as part of the dossier of evidence for review and assessment. This may include information in excess of that which is contained in the trial report.

Test Report Submission - Timescale, Approval and Acceptance

7. The test report should be submitted to the project team as soon as practicable, and not later than 3 months after completion of the test. It is important that the formal assessment takes place whilst all those involved in the testing are still in post and available and whilst the events of the test remain fresh in the minds of those attending.

8. The project team will confirm that the test report meets the required standard and formally accept the report from the contractor. Where there are shortcomings in the report, the project team may require the report to be re-written, which will delay the acceptance and assessment process; it is in the interests of all concerned that the report should of a satisfactory standard from the outset.

Test Report Configuration Control and Archiving

9. It is important that each test report can be clearly identified and referenced. There have been examples of programmes where extensive development testing has taken place and it has proved difficult to identify whether individual reports refer to the same or different tests.

10. If a report is changed or updated, it is important to identify the revised report accordingly. It is essential to retain all information relating to a full-scale test in a dossier; this will include the test report(s), photographs, cine and video records and any additional instrumentation records not included in the test report.

11. This dossier of evidence should be retained by and archived appropriately by the project team so that it can be accessed as necessary throughout the in-service life of the munition. Ideally, as electronic reporting becomes the norm, it should be possible to retain most of the relevant information on CD or DVD.

TEST REPORT TEMPLATE

1. The essential elements of an IM test report are described below. The precise format may vary depending upon the requirements of the customer and the standard procedures of the Test Facility.

2. The elements listed here are the absolute minimum and whilst reports should be as concise as practical, it is better to include information which may not be relevant than to omit information which may be relevant. Thus, where there is doubt, the author of the report should include information rather than omit it.

Executive Summary

- A one-page summary describing the test and concluding with an initial assessment of the response.

Introduction

- Background giving reason(s) for test, test sponsor, place and date of test, test procedure.
- Aim and Objectives of test
- Test Officials
- List of those attending the test

Test Equipment

- Identify all equipment used for the test. This will typically include:

  - Explosive stores, design standard, details of any inert components and packaging with diagrams and photographs of the test items before test
  - Exploded diagram of the packaged store (for packaged tests, to show packaging configuration and internal furniture)
  - Ancillary equipment (eg firing device for bullet and fragment impact)
  - Firing/Initiation System (eg detonator or shaped charge jet warhead to initiate donor in Sympathetic Reaction)
  - Instrumentation - list of all instrumentation used

- Test Procedure
- Test Configuration

Describe the test site and layout of test item, including test stand and method of fixing test item to the stand, and instrumentation. It is essential to include a diagram showing test arena, location of test item, position of witness plates, blast screens and similar devices, and all instrumentation with relevant distances. Include colour photographs of the test set up to show both general arrangement and close up details of the test item and how it is mounted.

Calibration

- Include details of any calibration tests, for example to achieve correct impact velocity and impact location for bullet and fragment impact.

Safety Measures

- Include details of range safety measures taken to protect personnel.

Results

- Describe the test in detail, including a diary or time log of events where appropriate (eg for Fast and Slow Heating). In particular, describe the reaction of test item. Include:

  - Details of all instrumentation measurements, temperature records and blast overpressure records.
  - A “pen picture” of how the test item reacted.
  - A debris map identifying all ejected debris, location and distance from test position.
  - Photographs of the test item post test and photographs of debris, the test site (to show damage and cratering) and of witness plates and screens. Label each photograph to clearly identify the subject, in particular the precise nature of the debris. Where the test has been conducted packaged and the lid of the container has remained in situ, include internal photographs with the lid removed but indicate that the lid was removed post-test. Include any post-test X-ray photography to determine condition of test items.

Meteorological conditions

- Record the relevant prevailing met conditions at the time of the test (eg wind speed, temperature).

Disposal of explosive items

- Include a brief statement of how the explosive test items were disposed of.

Conclusions

- A short summary of the results of the test and an initial assessment of the reaction Type, including rationale for the assessment.

References

- Should always include test directive and test procedure (eg test STANAG).

ISSUES RELEVANT TO SPECIFIC TESTS

1. Each of the IM test STANAGs currently includes guidance on the configuration and set up, instrumentation and conduct of each full-scale IM test. It is expected that in due course much of the guidance information in the test STANAGs will be transferred to AOP-39.

2. Information relevant to each of the IM tests has been widely debated within the NATO forum and, following the 1997 NIMIC Workshops on IM Testing, a NIMIC Report was presented to a joint meeting of AC/258 and AC/310 (now subsumed into AC/326).[1] One of the main recommendations of the workshop was the need for quantitative data – subjective and qualitative data should always play a lesser role.

3. This and other NIMIC reports, together with the information in the test STANAGs, form the basis for this Annex, which identifies the issues relevant to each of the IM full-scale tests. It is guidance rather than mandatory lists, but is intended to assist those responsible for developing IM test directives as well as those witnessing and conducting testing to ensure that all possible issues have been considered. It should always be read in conjunction with the relevant test STANAG.

[1] The Proposed Full Scale Test Procedures for IM Testing, NIMIC O-46 dated 26 Jan 99.

FAST HEATING - ISSUES TO BE CONSIDERED

1. Test Item Configuration

1.1 The test item configuration should be determined by the threat assessment. It should represent the configuration of the item appropriate to the life cycle phase being duplicated by the test. This may be packaged or unpackaged and it may on occasions be necessary to conduct a particular test both packaged and unpackaged. For small stores, the test will invariably be conducted packaged.

1.2 The test item should be to the full production standard. Non explosive sections of the item need only be geometrically and thermally representative.

1.3 The use of simulants, dummy units or structures may affect heat flow patterns. If used, these should exhibit closely comparable behaviour to those of the actual items they replace.

1.4 Complex electronic units should be thermally simulated only if it can be demonstrated that there is no possibility of the test environment causing the unit to produce a spurious signal capable of initiating a firing circuit.

1.5 Test fixtures and support stands should make minimum line contact with the test item and must not screen it from the enveloping fire. The test item should be supported to allow for any sagging likely to occur.

1.6 The test item should be mounted with its longitudinal axis horizontal such that the initial height of the bottom of the test item above the fuel surface at the start of the test is at least 0.3 m. The height should be chosen to ensure full combustion below the test item and not unduly increase the chance of occasional emergence of the test item from the flame envelope.

1.7 The test item should be prevented from falling into, and being quenched by, the fuel. Typically, a mesh tray may be placed beneath the test item; this should extend sufficiently to ensure that if the test item collapses or its contents fall out, such items will be held to remain exposed to the fire. The tray must not prevent complete engulfment of the test item by the fire and is typically sited about 50 mm below the surface of the fuel so that it retains its strength and does not affect the combustion of the fuel.

1.8 Any method used to restrain the test item in case of propulsion should not interfere with the heating of the item.

2. Test Conditions

2.1 The hearth should be large enough to allow at least 1m clearance on each side of the test item and designed to provide a volume of flame which completely engulfs the test item throughout the trial. The decision on whether to use a standard hearth or the mini-fuel fire test will depend upon the size of the item to be tested and the anticipated response.

2.2 The construction of the hearth and any associated walls should allow unrestricted debris throw and accurate measurement of blast overpressure to assist in determining the level of response.

2.3 Fuel – suitable liquid hydrocarbon fuels include JP-4, JP-5, JET A-1, AVCAT and commercial kerosene.

2.4 Where environmental concerns dictate, alternate fuel such as propane, or natural gas may be used if testing verifies that the overall test item heating rate, uniformity of spatial heating to the test item and type of radiation heat transfer duplicate those of the hydrocarbon fuel fire.

2.5 The quantity of fuel required is a function of the size of the fuel basin and the characteristics of the item being tested. There should be sufficient fuel for the test item to be completely engulfed in the flames for at least 150% of the estimated time to reaction.

2.6 The average flame temperature should be at least 800°C as measured by all valid temperature measuring devices at the test item without any contribution from the burning ordnance. This temperature is determined by averaging the temperature from the time the flame reaches 550°C until all ordnance reactions are complete.

2.7 The wind speed within the hearth area must not be greater than 10 km/h to ensure that the test item is fully engulfed in the flames.

2.8 Other meteorological conditions, eg rain that might influence the test outcome should be avoided.

3. Test Facility

3.1 The choice of a test facility will be determined by the size and shape of the test item, the type of fuel to be used, the expected response and the required test data.

4. Test Instrumentation

4.1 Appropriate and adequate instrumentation should be utilised to provide sufficient data so that the severity of the response of the munition can be determined. Such instrumentation should include the following:

- Temperature profile history of heating rates at a minimum of 4 sites (or more as determined by the test plan) on the test item to give adequate flame profile with adequate sampling rates until the response of the munition is complete.
- Measurement of flame temperature as a function of time.
- Blast pressure measurements.
- Witness Plates.
- Fragment Velocity Screens.
- Still photography of the pre and post-test conditions.
- High speed video or cine coverage of the test item and the surrounding area.
- Measurement of thermal flux.
- Measurement of sound via a microphone.
- Any other instrumentation as determined by the test plan and/or other requirement.

5. Observations and Records

5.1 The following minimum observations should be made and records kept:

- Test item identification (model, serial no etc.) including full details of any packaging.
- Type of energetic material and weight.
- The spatial orientation of the test item and method of suspension or mounting and/or restraint, height of bottom of test item above surface of fuel, distances from the test item to any protective wall or enclosure.
- Details of environmental pre-conditioning tests performed (if applicable).
- Temperature measuring device identification and locations.
- Description of test apparatus.
- Description of the instrumentation performance and of the methodology used to take the measurements.
- The type of fuel used for the test.
- Wind velocities and direction inside and outside the enclosure (if present) before the trial and any significant change in velocity/direction outside the enclosure (preferably well clear of the enclosure) during the trial.
- Record of the climatic conditions throughout the trial.
- Record of events versus time throughout the trial.
- Temperature-time history for each temperature measuring device.

- Pressure-time history.
- The time until flame temperature, as measured by any two of the temperature measuring devices, reaches 550°C shall be recorded.
- The average flame temperature.
- The identification and location of all debris, supported by a debris plot.

5.2 The following photographic records should be made:

- Still photographs of the test item before and after each trial, including the internal packing arrangement for packaged stores (ie with box lid removed). Include a dimensional reference.
- Still photographs of all significant debris resulting from the reaction of the test item (link with the debris plot). Include a dimensional reference.
- Colour cine film or video for the duration of each trial with time and audio correlation. Care should be taken in siting the camera(s) to ensure the best view of the test item and to minimise the likelihood of masking by smoke and flame. The cine or video should capture not only the reaction of the test item but also the ejection and spread of debris and firebrands around the test site.

SLOW HEATING - ISSUES TO BE CONSIDERED

1. Test Item Configuration

1.1 Normally, the test item will be unpackaged. Because the test item will be confined within a heating oven, observation and measurement of the level of response will be difficult and to add the additional complication of packaging might well prevent any sensible recording of the event.

1.2 There are exceptions, however. Small stores which are normally packaged throughout the life cycle up to the point of use such as Pyrotechnics, CADS/PADs, Small Arms and Cannon Ammunition, should be tested packaged. There is little point in conducting a Slow Heating test on a single bare 20 mm round of ammunition since it is the response of a full package that is of interest. Additionally, if there are strong reasons for undertaking the test on a larger munition in the packaged configuration, supported by the threat assessment, then a packaged test may be considered, but it may also be necessary to undertake an unpackaged test in order to obtain sufficient information to assess a level of response with any confidence.

1.3 For all-up rounds that contain more than one major energetic component (such as rocket motors and warheads), the energetic components may be tested either individually or as an all-up round.

1.4 The test item should be to the full production standard. Non explosive sections of the item need only be geometrically and thermally representative.

1.5 The use of simulants, dummy units or structures may affect heat flow patterns. If used, these should exhibit closely comparable behaviour to those of the actual items they replace.

1.6 Complex electronic units should be thermally simulated only if it can be demonstrated that there is no possibility of the test environment causing the unit to produce a spurious signal capable of initiating a firing circuit.

1.7 In slow heating tests, a substantial part of the explosive material may reach hazardous temperatures before ignition occurs. Therefore, subsequent events are often likely to be more violent than those that occur in fast heating tests.

1.8 The test fixtures should not interfere with the test stimulus (heating rate) imposed on the test item.

1.9 Any method of restraint to prevent propulsion should not affect the ability of the test item to rupture or fragment.

1.10 Extreme external conditions (e.g. wind, rain, temperature) that might influence the test outcome should be avoided.

1.11 The choice of test apparatus should be determined by the size and shape of the test item, the expected response and the required test data.

1.12 The test apparatus (such as the oven or the jacket) must be capable of providing the required thermal environment and increasing the temperature within the apparatus at the required rate throughout the anticipated temperature range. It should be designed to minimise hot spots and to ensure a uniform thermal environment for the item under test.

1.13 The test apparatus should be designed to minimise the possibility of secondary reactions such as those caused by exudate contacting the heating source. If exudation of the energetic filling is anticipated, consider ways of collecting the exudate to prevent such reactions.

2. Test Conditions

2.1 A rate of temperature rise of 3.3ºC per hour should be used for the purpose of standardisation. This represents a worst case scenario and this heating rate should not be taken as the most likely slow heating rate to be seen in service. For this reason, time to reaction may have little relevance to real life scenarios and, whilst it will be recorded, care should be taken in how it is subsequently used.

2.2 The test item should be at ambient temperature at the start of the test.

2.3 It is acceptable to raise the temperature of the test item more rapidly at the start of the test to reduce test time. The chamber temperature can be raised at up to 5.5ºC per minute until a chamber temperature of 50ºC is reached. At this point the heating must stop and the temperature maintained at 50ºC for 8 hours or until the test item reaches thermal equilibrium at 50ºC, whichever occurs first. Thermal modelling should be used to predict the length of time needed to achieve thermal equilibrium at 50ºC.

2.4 The temperature should then be increased linearly at 3.3ºC per hour until all reactions cease

3. Test Facility

3.1 The test is usually performed by placing the test item in a disposable oven and heating the item with circulating heated air.

3.2 The test facility should be capable of increasing the air temperature at the prescribed rate throughout the anticipated temperature range and maintaining a reasonably uniform temperature in the air around the test item. Some gradient in temperature between the input and exit air streams is to be expected, but this should not be greater than 5ºC.

3.3 As an aid to achieving uniform temperatures, there should be an air space at least 200 mm wide on all sides of the item to allow for air circulation, and the oven should be insulated.

3.4 A minimum of four thermocouples should be used to ensure that the oven is uniformly heated and to monitor the surface temperature of the test item. Where it is possible to get access to the interior of the test item without altering the test item, interior temperatures should also be measured.

3.5 In general, there should be at least two thermocouples mounted on opposite surfaces of the test item, one each in the air space near the air inlet and exit, and one each in the air space on opposite sides of the round. The oven should be constructed so as to provide the least possible confinement for any reactions that occur, and it should have a window to permit video coverage.

4. Test Instrumentation

4.1 Appropriate and adequate instrumentation should be utilised to provide sufficient data so that the severity of response of the munition can be determined. Such instrumentation should include the following:

- Temperature as a function of time should be recorded at multiple positions on the surface of the test item and within the chamber. The thermocouple sampling rate should be at least once per minute.
- Blast pressure measurements.
- Witness Plates.
- Fragment Velocity Screens.
- Still photography of the pre and post-test conditions.
- High speed video or cine coverage of the test item (via a viewing window in the oven) and of the surrounding area.
- Measurement of thermal flux.
- Measurement of sound via a microphone.
- Any other instrumentation as determined by the test plan and/or other requirement.

5. Observations and Records

5.1 The following minimum observations should made and records kept:

- Test item identification (model, serial no etc.) including full details of any packaging.
- Type of energetic material and weight.
- The spatial orientation of the test item and method of suspension or mounting and/or restraint, distances from the test item/oven wall to any protective wall or enclosure.
- Details of environmental pre-conditioning tests performed (if applicable).
- Temperature measuring device identification and locations.
- Description of test apparatus, including the oven.
- The method used to heat the oven.
- Description of the instrumentation performance and of the methodology used to take the measurements.
- Record of the meteorological conditions throughout the trial.
- Record of events versus time throughout the trial.
- Temperature-time history for each temperature measuring device.
- Pressure-time history.
- The identification and location of all debris, supported by a debris plot.

5.2 The following photographic records should be made:

- Still photographs of the test item before and after each trial, including the internal packing arrangement for packaged stores (ie with box lid removed). Include a dimensional reference.
- Still photographs of the test set up and the heating oven, and the method used to mount the test item.
- Still photographs of all significant debris resulting from the reaction of the test item (link with the debris plot). Include a dimensional reference.
- Colour cine film or video for the duration of each trial with time and audio correlation. Care should be taken in siting the camera(s) to ensure the best view of the test item; for slow heating, a cine or video record should be taken through a viewing window in the oven. A second cine or video should capture not only the reaction of the test item but also the ejection and spread of debris and firebrands around the test site.

BULLET IMPACT - ISSUES TO BE CONSIDERED

1. Test Item Configuration

1.1 Normally, the test item will be unpackaged. Small stores which are normally packaged throughout the life cycle up to the point of use such as Pyrotechnics, CADS/PADs, Small Arms and Cannon Ammunition, should be tested packaged. There is little point in conducting a Bullet Impact test on a single bare 20 mm round of ammunition since it is the response of a full package that is of interest.

1.2 However, if there are strong reasons for undertaking the test on a larger munition in the packaged configuration, supported by the threat assessment, then a packaged test should be considered which may either be in addition to, or in place of, an unpackaged test.

1.3 For all-up rounds that contain more than one major energetic component (such as rocket motors and warheads), the energetic components may be tested either individually or as an all-up round.

1.4 The test item should be to the full production standard. Non explosive sections of the item need only be geometrically and thermally representative.

1.5 The use of simulants, dummy units or structures may affect heat flow patterns. If used, these should exhibit closely comparable behaviour to those of the actual items they replace.

1.6 Complex electronic units should be thermally simulated only if it can be demonstrated that there is no possibility of the test environment causing the unit to produce a spurious signal capable of initiating a firing circuit.

1.7 It is normal to mount the test item on a supporting stand in the horizontal axis but, if required, or if shown by the threat assessment to be appropriate, alternative configurations may be considered.

1.8 The test fixtures should not interfere with the test stimulus imposed on the test item or on its ability to rupture or fragment.

1.9 Any method of restraint (eg clamping or tethering) to prevent propulsion should not affect the ability of the test item to rupture or fragment.

2. Test Conditions

2.1 The line of fire should normally be at right angles to the longitudinal axis of the test item.

2.2 The exact range from gun to target should be determined by the test authorities, and will depend on accuracy and safety aspects.

2.3 The impact velocity should be 850 **±** 20 ms^{-1}. Sighting shots (usually 3) should be fired to confirm that the impact point will be hit and to calibrate the velocity.

2.4 Two points of aim should normally be selected. The first should be the largest explosive component (ie the main charge filling of the warhead or the propellant of the rocket motor) such that the bullet passes through the explosive. The second should be the most shock sensitive component, such as the rocket motor igniter or warhead booster, provided that it is credible that the bullet can penetrate sufficiently to achieve an impact.

2.5 It is important to conduct both tests since in terms of presented area, the likelihood of the largest explosive component being struck will be significantly greater whilst a strike on the most shock sensitive

component may produce the most violent response. The aim point should be clearly marked on the test item and allowance made for the accuracy of the gun. Particular care is needed with packaged items to ensure that the desired aim point within the package is achieved.

2.6 The test item should be at ambient temperature at the start of the test unless the threat assessment shows that there are specific reasons for testing at a different temperature.

2.7 Extreme external conditions (e.g. wind, rain, temperature) that might influence the test outcome should be avoided.

2.8 If the impact of the bullet produces no reaction from the test item, it may be permissible to carry out a second bullet impact test on the same item. This will depend upon the amount of de-confinement caused by the entry (and, if appropriate, exit) of the bullet which, if significant, might invalidate the result of any subsequent test.

3. Test Facility

3.1 There are no special requirements for the test facility in relation to Bullet Impact.

4. Test Instrumentation

4.1 Appropriate and adequate instrumentation should be utilised to provide sufficient data so that the severity of response of the munition can be determined. Such instrumentation should include the following:

- Velocity sensors to measure bullet impact velocity.
- Blast pressure measurements.
- Witness Plates.
- Fragment Velocity Screens.
- Still photography of the pre and post-test conditions.
- High speed video or cine coverage of the test item and of the surrounding area. This should provide a view of the bullet striking the test item to confirm accuracy of aim.
- Measurement of thermal flux.
- Measurement of sound via a microphone.
- Any other instrumentation as determined by the test plan and/or other requirement.

5. Observations and Records

5.1 The following minimum observations should made and records kept:

- Test item identification (model, serial no etc.) including full details of any packaging.
- Type of energetic material and weight.
- The spatial orientation of the test item and method of suspension or mounting and/or restraint, distances from the test item to any protective wall or enclosure.
- Details of environmental pre-conditioning tests performed (if applicable).
- Description of the gun and ammunition used.
- Record of the aim point(s) selected.
- Record of where the bullet impacted the test item.
- Record of whether the bullet exited from the test item or remained within it.
- Description of the instrumentation performance and of the methodology used to take the measurements.
- Record of the meteorological conditions throughout the trial.
- Record of events versus time throughout the trial, from opening fire until all reactions from the test item have ceased. The times from impact of the bullet to initial reaction of the test item and,

if the initial reaction is burning, until any subsequent more violent response, are of particular interest.

- Pressure-time history.
- The identification and location of all debris, supported by a debris plot.
- Indication of propulsion (from video, thrust measurement device or witness plate)

5.2 The following photographic records should be made:

- Still photographs of the test item before and after each trial, including the internal packing arrangement for packaged stores (ie with box lid removed). Include a dimensional reference.
- Still photographs of the test set up and the method used to mount the test item.
- Still photographs of all significant debris resulting from the reaction of the test item (link with the debris plot). Include a dimensional reference.
- Colour cine film or video for the duration of each trial with time and audio correlation. Care should be taken in siting the camera(s) to ensure the best view of the test item. A second cine or video should capture not only the reaction of the test item but also the ejection and spread of debris and firebrands around the test site.

FRAGMENT IMPACT - ISSUES TO BE CONSIDERED

1. Test Item Configuration

1.1 Normally, the test item will be unpackaged. Small stores which are normally packaged throughout the life cycle up to the point of use such as Pyrotechnics, CADS/PADs, Small Arms and Cannon Ammunition, should be tested packaged.

1.2 There is little point in conducting a Fragment Impact test on a single bare 20 mm round of ammunition since it is the response of a full package that is of interest. However, if there are strong reasons for undertaking the test on a larger munition in the packaged configuration, supported by the threat assessment, then a packaged test should be considered which may either be in addition to, or in place of, an unpackaged test.

1.3 For all-up rounds that contain more than one major energetic component (such as rocket motors and warheads), the energetic components may be tested either individually or as an all-up round.

1.4 The test item should be to the full production standard. Non explosive sections of the item need only be geometrically and thermally representative.

1.5 The use of simulants, dummy units or structures may affect heat flow patterns. If used, these should exhibit closely comparable behaviour to those of the actual items they replace.

1.6 Complex electronic units should be thermally simulated only if it can be demonstrated that there is no possibility of the test environment causing the unit to produce a spurious signal capable of initiating a firing circuit.

1.7 It is normal to mount the test item on a supporting stand in the horizontal axis but, if required, or if shown by the threat assessment to be appropriate, alternative configurations may be considered.

1.8 The test fixtures should not interfere with the test stimulus imposed on the test item or on its ability to rupture or fragment.

1.9 Any method of restraint (eg clamping or tethering) to prevent propulsion should not affect the ability of the test item to rupture or fragment.

2. Test Conditions

2.1 The line of fire should normally be at right angles to the longitudinal axis of the test item.

2.2 The exact range from fragment gun to target should be determined by the test authorities, and will depend on accuracy and safety aspects.

2.3 A single 18.6 g steel fragment, to the dimensions described in STANAG 4496 should be fired at the test item. STANAG 4496 Edition 1 calls up a standard test at a fragment velocity of 2530 ms^{-1}; an alternative test at a lower velocity of 1830 ms^{-1} can be used where the threat assessment shows that there is an extremely low probability of the test munition experiencing a fragment at the higher velocity.

2.4 Two points of aim should normally be selected. The first should be the largest explosive component (ie the main charge filling of the warhead or the propellant of the rocket motor) such that the fragment passes through the explosive. The second should be the most shock sensitive component, such as the rocket motor igniter or warhead booster, provided that there is a credible probability that the fragment can penetrate sufficiently to achieve an impact; otherwise this second test can be omitted.

2.5 The aim point should be clearly marked on the test item and allowance made for the accuracy of the fragment gun. Particular care is needed with packaged items to ensure that the desired aim point within the package is achieved.

2.6 The test item should be at ambient temperature at the start of the test unless the THA shows that there are specific reasons for testing at a different temperature.

2.7 Extreme external conditions (e.g. wind, rain, temperature) that might influence the test outcome should be avoided.

3. Test Facility

3.1 There are no special requirements for the test facility in relation to Fragment Impact.

4. Test Instrumentation

4.1 Appropriate and adequate instrumentation should be utilised to provide sufficient data so that the severity of response of the munition can be determined. Such instrumentation should include the following:

- Velocity sensors to measure fragment impact velocity.
- Blast pressure measurements.
- Witness Plates.
- Fragment Velocity Screens.
- Still photography of the pre and post-test conditions.
- High speed video or cine coverage of the test item and of the surrounding area. This should provide a view of the fragment striking the test item to confirm accuracy of aim.
- Measurement of thermal flux.
- Measurement of sound via a microphone.
- Any other instrumentation as determined by the test plan and/or other requirement.

5. Observations and Records

5.1 The following minimum observations should made and records kept:

- Test item identification (model, serial no etc.) including full details of any packaging.
- Type of energetic material and weight.
- The spatial orientation of the test item and method of suspension or mounting and/or restraint, distances from the test item to any protective wall or enclosure.
- Details of environmental pre-conditioning tests performed (if applicable).
- Description of the fragment gun and of the fragment including weight, dimensions and material.
- Record of the aim point(s) selected.
- Record of where the fragment impacted the test item.
- Record of whether the fragment exited from the test item or remained within it (where the case of the test item remains intact.)
- Description of the instrumentation performance and of the methodology used to take the measurements.
- Record of the meteorological conditions throughout the trial.
- Record of events versus time throughout the trial.
- Pressure-time history.
- The identification and location of all debris, supported by a debris plot.
- Indication of propulsion (from video, thrust measurement device or witness plate)

5.2 The following photographic records should be made:

- Still photographs of the test item before and after each trial, including the internal packing arrangement for packaged stores (ie with box lid removed). Include a dimensional reference.
- Still photographs of the test set up and the method used to mount the test item.
- Still photographs of all significant debris resulting from the reaction of the test item (link with the debris plot). Include a dimensional reference.
- Colour cine film or video for the duration of each trial with time and audio correlation. Care should be taken in siting the camera(s) to ensure the best view of the test item. A second cine or video should capture not only the reaction of the test item but also the ejection and spread of debris and firebrands around the test site.

SYMPATHETIC REACTION - ISSUES TO BE CONSIDERED

1. Test Item Configuration

1.1 The sympathetic reaction test is designed to assess the propagation of reaction of a munition in the logistic configuration and will therefore require a packaged donor munition and a number of packaged acceptor munitions.

1.2 In order to provide a representative logistic configuration (eg pallet load) with representative confinement, additional inert packaged munitions (or containers filled with sand to replicate the level of confinement) may also be used.

1.3 The number of acceptors and inert stores will depend on the logistic configuration. Normally at least 3 acceptors should be used, including one positioned diagonally so that the test replicates the focussing effect which can result in greater fragment energy in a diagonal direction.

1.4 For small stores, such as Pyrotechnics, CADs and PADs and Small Arms Ammunition, the purpose of the test is to determine package to package propagation. If it is assessed as likely that all the effects will be contained within the donor package, then the test can be conducted using a single package. If this shows that effects external to the package do occur, then the test will have to be repeated using donor and acceptor packages.

1.5 There may be circumstances in which it is also necessary to test the munitions unpackaged, if the threat assessment requires it, for example for stores which are stacked unpackaged and are likely to be exposed to threats which might cause one or more stores to detonate, or for stores which are mounted in close proximity on an aircraft pylon or in a ship's magazine.

1.6 For all-up rounds that contain more than one major energetic component (such as rocket motors and warheads), the energetic components may be tested individually. However, because of the interaction between components, a test using all-up rounds will always be required.

1.7 The test items should be to the full production standard. Non explosive sections of the items need only be geometrically and thermally representative.

1.8 The use of simulants, dummy units or structures may affect heat flow patterns. If used, these should exhibit closely comparable behaviour to those of the actual items they replace.

1.9 Complex electronic units should be thermally simulated only if it can be demonstrated that there is no possibility of the test environment causing the unit to produce a spurious signal capable of initiating a firing circuit.

1.10 Acceptor stores should be marked (eg by painting each a different colour) to assist with debris identification.

2. Test Conditions

2.1 For HE munitions, the donor should be initiated in design mode to achieve full detonation. This may be done using plastic explosive to initiate the booster or using electrical means to initiate a detonator. It is essential that full detonation is achieved.

2.2 For rocket motors, the normal method of initiating the donor is to attack the propellant through the motor case using a shaped charge warhead at an appropriate stand off. For smaller stores which are not designed to detonate, the donor store should be initiated in design mode.

2.3 The test items should be at ambient temperature at the start of the test unless the threat assessment shows that there are specific reasons for testing at a different temperature.

2.4 Extreme external conditions (e.g. wind, rain, temperature) that might influence the test outcome should be avoided.

3. Test Facility

3.1 There are no special requirements for the test facility in relation to Sympathetic Reaction.

4. Test Instrumentation

4.1 Appropriate and adequate instrumentation should be utilised to provide sufficient data so that the severity of response of the munition can be determined. Such instrumentation should include the following:

- Velocity sensors to measure fragment impact velocity.
- Blast pressure measurements. It is useful to conduct a preliminary test to record the blast overpressures generated by the donor alone; this will also provide confidence that the method of initiation does achieve a full detonation.
- Witness Plates.
- Fragment Velocity Screens.
- Still photography of the pre and post-test conditions.
- High speed video or cine coverage of the test item and of the surrounding area. This should provide a view of the fragment striking the test item to confirm accuracy of aim.
- Measurement of thermal flux.
- Measurement of sound via a microphone.
- Any other instrumentation as determined by the test plan and/or other requirement.

5. Observations and Records

5.1 The following minimum observations should made and records kept:

- Test item identification (model, serial no etc. for donor and all acceptors) including full details of the packaging.
- Type of energetic material and weight.
- The spatial orientation of the test items and method of suspension or mounting and/or restraint, distances from the test item to any protective wall or enclosure.
- Details of environmental pre-conditioning tests performed (if applicable).
- Confirmation that the donor detonated as required.
- Description of the instrumentation performance and of the methodology used to take the measurements.
- Record of the meteorological conditions throughout the trial.
- Record of events versus time throughout the trial.
- Pressure-time history.
- The identification and location of all debris, supported by a debris plot. It is important to distinguish between donor and individual acceptors.

5.2 The following photographic records should be made:

- Still photographs of the test items before and after each trial, including the internal packing arrangement for packaged stores (ie with box lid removed). Include a dimensional reference.
- Still photographs of the test set up and the method used to mount the test item.
- Still photographs of all significant debris resulting from the reaction of the test item (link with the debris plot). Include a dimensional reference.
- Colour cine film or video for the duration of each trial with time and audio correlation. Care should be taken in siting the camera(s) to ensure the best view of the test item. A second cine

or video should capture not only the reaction of the test item but also the ejection and spread of debris and firebrands around the test site.

SHAPED CHARGE JET IMPACT - ISSUES TO BE CONSIDERED

1. Limitations

1.1 The test is most appropriate for systems containing energetic materials having a detonation failure diameter significantly larger than the jet diameter. Systems containing energetic materials with small failure diameters, including most current warheads, will normally fail this test. This should be considered this when determining whether or not to conduct the test.

1.2 If other data indicate that the test item is very unlikely to pass the test, there is little point in wasting resources by conducting the test just to confirm failure.

1.3 The test may also be unnecessary if it can be reliably shown that the detonation failure diameter of the energetic material is larger than the diameter of the munition (so that a detonation cannot be sustained in the munition), and if the threat assessment indicates that reactions less severe than Type I or Type II are not a concern. In order to make this judgement, determine the detonation failure diameter with the energetic material confined as it would be in the real munition.

1.4 Make such a judgement only for very large and expensive test items, and support such a determination by data on the energetic material that is validated by knowledgeable national authorities. Materiel that passes this test is not necessarily acceptable in a tactical situation. Other tests may be required.

1.5 Where a shaped charge jet is used to initiate a donor munition in a Sympathetic Reaction test, the resulting response of the donor can be used as evidence of the reaction to Shaped Charge Jet Impact and there is no need to perform a separate test.

2. Test Item Configuration

2.1 The test may be carried out packaged or unpackaged (or both) as determined by the threat assessment. Small stores which are normally packaged throughout the life cycle up to the point of use, such as Pyrotechnics, CADS/PADs, Small Arms and Cannon Ammunition, should be tested packaged. In such cases, where it is assessed that the input energy of the Shaped Charge Warhead will significantly exceed the output energy from the test item, there may be little point in conducting the test.

2.2 For all-up rounds that contain more than one major energetic component (such as rocket motors and warheads), the energetic components may be tested either individually or as an all-up round.

2.3 The test item should be to the full production standard. Non explosive sections of the item need only be geometrically and thermally representative.

2.4 The use of simulants, dummy units or structures may affect heat flow patterns. If used, these should exhibit closely comparable behaviour to those of the actual items they replace.

2.5 Complex electronic units should be thermally simulated only if it can be demonstrated that there is no possibility of the test environment causing the unit to produce a spurious signal capable of initiating a firing circuit.

2.6 It is normal to mount the test item on a supporting stand in the horizontal axis but, if required, or if shown by the THA to be appropriate, alternative configurations may be considered.

2.7 The test fixtures should not interfere with the test stimulus imposed on the test item or on its ability to rupture or fragment.

2.8 Any method of restraint (eg clamping or tethering) to prevent propulsion should not affect the ability of the test item to rupture or fragment.

3. Test Conditions

3.1 STANAG 4526 Ed 2 includes both a standard test and a tailored test. For the standard test, the test item is subjected to the jet from a shaped charge representing the 50 mm Rockeye warhead, or an equivalent having a similar V^2d value. For the tailored test, the shaped charge is selected according to the threat assessment. The STANAG gives guidance on typical V^2d values associated with particular threat types and the requirements for characterisation of the jet if the standard 50 mm Rockeye is not used.

3.2 The aim is to attack the main energetic material filling of the munition and the line of fire should be chosen to give the longest possible path length in the energetic material. Unlike bullet and fragment impact tests, there is no point in attacking small components such as the igniter.

3.3 The shaped charge should be placed at a realistic stand off from the munition or its packaging/shielding as determined by the threat assessment. The stand off influences the V^2d delivered by a shaped charge and it is important to specify the stand off as part of the jet characterisation.

3.4 The test item should be at ambient temperature at the start of the test unless the threat assessment shows that there are specific reasons for testing at a different temperature.

3.5 Extreme external conditions (e.g. wind, rain, temperature) that might influence the test outcome should be avoided.

4. Test Facility

4.1 There are no special requirements for the test facility in relation to Shaped Charge Jet Impact.

5. Test Instrumentation

5.1 Appropriate and adequate instrumentation should be utilised to provide sufficient data so that the severity of response of the munition can be determined. The passing criterion is a Type III reaction and higher order reactions are possible. Thus the instrumentation should be selected noting that Types I to III responses are likely. Such instrumentation should include the following:

- Velocity sensors to measure fragment impact velocity.
- Blast pressure measurements.
- Witness Plates.
- Fragment Velocity Screens.
- Still photography of the pre and post-test conditions.
- High speed video or cine coverage of the test item and of the surrounding area.
- Measurement of thermal flux.
- Measurement of sound via a microphone.
- Any other instrumentation as determined by the test plan and/or other requirement.

6. Observations and Records

6.1 The following minimum observations should made and records kept:

- Test item identification (model, serial no etc.) including full details of any packaging.
- Type of energetic material and weight.
- The spatial orientation of the test item and method of suspension or mounting and/or restraint, distances from the test item to any protective wall or enclosure.

- Details of environmental pre-conditioning tests performed (if applicable).
- A full characterisation of the shaped charge jet.
- Record of the aim point selected and the angle of the jet to the munition.
- Description of the instrumentation performance and of the methodology used to take the measurements.
- Record of the meteorological conditions throughout the trial.
- Record of events versus time throughout the trial.
- Pressure-time history.
- The identification and location of all debris, supported by a debris plot.
- Indication of propulsion (from video, thrust measurement device or witness plate)

6.2 The following photographic records should be made:

- Still photographs of the test item before and after each trial, including the internal packing arrangement for packaged stores (ie with box lid removed). Include a dimensional reference.
- Still photographs of the test set up and the method used to mount the test item, including the positioning of the shaped charge.
- Still photographs of all significant debris resulting from the reaction of the test item (link with the debris plot). Include a dimensional reference.
- Colour cine film or video for the duration of each trial with time and audio correlation. Care should be taken in siting the camera(s) to ensure the best view of the test item. A second cine or video should capture not only the reaction of the test item but also the ejection and spread of debris and firebrands around the test site.

INTERPRETATION OF MUNITION TYPES OF RESPONSES

To assess a munition response type it is vital to record as much relevant data as possible. Blast and fragmentation are two key elements:

- Blast overpressure measurements at 5, 10 and 15 m will give an indication of the level of response although there is no absolute scale; the explosion of a large munition with a high NEQ will give considerably higher blast overpressures than explosion of a small munition with a low NEQ. Damages to neighboring structures are also good indicators of the shock wave intensity.

- The degree of case fragmentation, fragment size and distance thrown are another measure used to judge reaction type. Detonation reactions typically shatter the munition case into small fragments and project debris over considerable distances, with the entire energetic filling being consumed in the reaction. As the violence of reaction reduces through explosion to deflagration, so the size of fragments will increase, the distance thrown reduces and greater amounts of unreacted filling will remain, whilst for a burning reaction, there will be no fragmentation or debris throw beyond 15 meters. It is therefore important to map the debris throw from each test, identifying each item, its size and weight, and the distance it has been thrown, supported by photographic evidence of the debris. It is also very important to clear the test range of debris from a previous test before the next test is started, otherwise the test site will be contaminated with old debris which will confuse the identification and mapping process.

- Other means of measuring violence of response include the use of witness plates to record blast and fragment output from an explosion or detonation and velocity screens to measure fragment velocity and size. Ionisation probes placed along the body of the test item to measure the speed of the reaction and distinguish between detonation and explosion is also a possibility. The video record of the test is a vital piece of evidence and can often provide a good indication of the violence of reaction which, when combined with other data, enables the reaction type to be assessed with some confidence.

This Annex lists typical munition behaviour and resulting effects on the environment corresponding to the NATO response descriptors (i.e. munition types of response). The types of reactions are: response type I, II, III, IV and V as defined in STANAG 4439 edition 2.

RESPONSE TYPE	MUNITION BEHAVIOUR		EFFECTS			
	Energetic materials	**Case**	**Blast**	**Projection of energetic materials**	**Projection of fragments**	**Other**
I	- detonation - supersonic decomposition reaction	- very fast plastic deformation - total fragmentation	- intense shock wave - damage to neighbouring structures	- all the materials react	- perforation, plastic deformation or fragmentation of adjacent metal plates	- large craters in the ground
II	- partial detonation	partial fragmentation + large fragments	ditto	ditto	ditto	ditto proportional to % of detonating material
III	- fast combustion of confined material (explosion) - local pressure build up	- violent breaking into large fragments	- blast effect < detonation - damage to neighboring structures - $\Delta P > 50$ mbar at 15 m	- scattering of burning materials - risk of fire	- long-range projection - damage to metal plates (breaks, rips, cuts)	- small craters in the ground
IV	- combustion/ deflagration - non-violent pressure release	- breaks but does not fragment into more than 3 parts - expulsion of end caps - gases release through opening	- blast effect limited to $\Delta P < 50$ mbar at 15 m	- scattering of materials - risk of fire	- expulsion of end caps and large structural parts - no significant damage	- damage caused by heat and smoke - propulsion of unattached sample
V	- combustion	- splits in a non-violent way - smooth release of gases - separation of ends	- blast effect limited to $\Delta P < 50$mbar at 5m	- energetic materials remain nearby (< 15m)	- debris remains in place, except covers - no fragment of more than 79J or more than 150 g beyond 15m	- heat flow < 4 kW/m^2 at 15m

PRESENTING THE IM SIGNATURE

1. The IM signature is a representation of the IM level of the munition, i.e. the response level of the munition to the IM threats.

2. The IM signature should report the following information:

- Munition assessed and configuration
- The threats: Slow Heating (SH), Fast Heating (FH), Bullet Impact (BI), Fragment Impact (FI), Sympathetic Reaction (SR), Shaped Charge Jet Impact (SCJI).
- The range of validity of the assessment (specific threat, baseline range, full range …)
- The response type for each threat: Type I response (Detonation) (I), Type II response (Partial Detonation) (II), Type III response (Explosion) (III), Type IV response (Deflagration) (IV), Type V response (Burning) (V), No reaction (NR).
- The assessment methodology for each response type (Analysis and/or Full Scale Test)
- The fulfilment with the IM requirements

3. Example 1: in the following IM signature, the symbol (**O**) represents the assessed response in a particular configuration (configuration 1). A simple colour coding system is included to readily identify a pass (white area) or a failure (shaded area). To be compliant with the IM requirements defined in STANAG 4439, all the symbols should be positioned in the white area.

Table 3 - IM Signature example 1

Munition configuration 1

	FH	SH	BI	FI	SR	SCJI
No Reaction			**O**			
Type V	**O**	**O**				
Type IV				**O**		
Type III						**O**
Type II						
Type I						

IM requirement fulfilled

IM requirement not fulfilled

Not Assessed

3. Example 2: in the following IM signatures, a more detailed traffic light colour coding system is used to reflect fulfillment or how far from fulfillment the munition is. The colour coding system is presented in Table 2. To be compliant with IM requirement defined in STANAG 4439, all the boxes should be coloured light green.

Table 2 - IM Signature Colour Coding

Colour Coding	IM Compliance	
Green	IM requirement fulfilled.	Pass (P)
Yellow	IM requirement not fulfilled. One response level difference between the assessed response level and the IM requirement	Fail (F)
Red	IM requirement not fulfilled. Two and plus response levels difference between the assessed response level and the IM requirement	
White	Not Assessed (N/A)	Not Assessed

Examples of IM signature integrating both a colour code and a response type code are presented in Table 3.

Table 3- IM Signature: Example 2

		FH	SH	BI	FI	SR	SCJI
Configuration 1		**V**		**NR**	**IV**	**N/A**	**III**
Configuration 2		**III**		**IV**	**N/A**	**N/A**	**I**
Configu-ration 3	**Warhead**	**(I)**	**N/A**	**NR**	**V Main Charge** **III Booster**	**P**	**F**
	Propulsion Unit	**IV**	**V**	**V 0.50 AP** **IV 7.62 Ball**	**N/A**	**N/A**	**(P)**
	Full-up Round	**(I)**	**V**	**IV**	**III**	**P**	**F**

( ) – Analysis

4. The IM compliance signature corresponding to the worst credible life cycle configuration identified for each considered threat, the relevant configurations and threats have to be clearly reported.

In the following example of IM compliance signature for the munition X, the symbols **O**, ☐, ∇ represent the assessed response in particular configurations (respectively bare configuration, logistical package unfuzed configuration and logistical packaged fuzed configuration).

To be compliant with the IM requirements defined in STANAG 4439, all the symbols should be positioned in the white area.

Table 4 - IM Compliance Signature example

Munition X: IM compliance signature

	FH	SH	BI	FI	SR	SCJI
No Reaction			**O**			
Type V	**O**	☐				
Type IV				▽		
Type III						**O**
Type II					▽	
Type I						

IM ASSESSMENT REPORT

At a minimum, the following elements shall be included in the IM Assessment Report.

Executive summary
The executive summary is a summary of the information able to be released to nations requesting information related to the IM level of the munition. At least the following information should be reported:

- Information related to the munition energetic materials, design and packaging.
- IM signature(s) for the different configurations.
- IM compliance signature.
- The assessed threat range validity.

Munition system information
- Munition specific reference
- Intended operational use.
- Munition design information including design trade studies affecting IM.
- Energetic components. All energetic components should be specifically addressed.
- Hazard Classification for transport and/or storage. Identify whether the Hazard Classification is Interim or Final.
- Munition Safety information in accordance with STANAG 4297.

Assessed configuration(s)
- Tactical Configuration.
- Logistics Configuration(s).
- Packaging Design.
- Palletization Layout.

Munition threat analysis
- Definition of the service environment including the manufacture-to-target or disposal sequence for the munition (Life-cycle profile).
- Description of the significant threats to the weapon system during its “cradle to grave” life cycle. Include both hostile and “friendly” threats with a special emphasis on the IM threats. Describe how the analysis was conducted (include references) and present a summary table of the results.

Supporting evidence
- **Modelling results**
  Modelling can be used where proven capabilities exist, properly validated against experiment.
  This statement also lends support to the idea that small scale testing and modelling data should be considered complementary to test data or, in some cases replace them, and should, in fact, be the primary means of assessment, with full-scale tests used to validate the modelling results. Of course, this methodology depends on the existence of proven models. But the methodology should be in place to use the current modelling capabilities as they improve and evolve over time. It should be noted also that the usefulness of complementary information will always depend on its validity, and whether it is interpreted in the proper context. Only then can it serve to increase confidence.

- **Tests results**
  Tests results may include laboratory testing, small scale testing, sub scale testing, full scale testing, components testing, and energetic material(s) testing in accordance with STANAG 4170 and AOP-7. Concerning the IM tests, the following information should be thorough enough to permit a clear scoring of the test results.

  - Test report(s)
  - Setup information/item configuration

- Photographs and videos of set up and results.
- Description of information and any quantitative data recorded (e.g., pressure, temperature).
- Debris maps.
- Describe the results of IM tests on components and all-up-rounds.
- Describe the type of reaction which occurred in accordance with definitions of reaction and provide references.

- **Historical data including results on munition variants and read-across results from similar munition**

IM Signature(s)
See Annex J for more information

IM DESIGN TECHNIQUES

The most effective method for achieving successful Insensitive Munition (IM) design is to use a systems approach. The three key elements in the IM systems approach are:

- The choice of the energetic materials (EMs)
- The mitigation technologies and design tradeoffs integrated in the design of the case and more generally in the non-explosive parts of the munition.
- The mitigation technologies and design tradeoffs integrated in the design of the packaging

These three key elements will be reviewed in the following sections.

1. The Energetic Material Selection

Normally, the first step is to determine the EMs that are to be used. The decision on which EM matches an application is governed by many factors that each needs to be tradeoff to provide the most practical solution:

- Cost
- Performance
- Producibility (infrastructure availability, supply decisions and off-sets for ingredients…)
- Technology maturity (development status, existence of specifications, whether qualified or not…)
- H&S (Environmental considerations, toxicity…)
- Sensitiveness to shock, heat and impact
- Ageing

Since it is the energetic materials that create the hazard, it is necessary to take into account the characteristics of the energetic material which determine its propensity for giving benign responses to the stimuli defined. Material qualification in accordance with the requirements of STANAG 4170 and AOP-7 will provide some of the necessary data.

When selecting a suitable EM for an IM application, it is highly desirable that it possesses inherent low vulnerability (i.e. reduced response) to the IM stimuli (shock and thermal). The factors that contribute to the EM response are discussed below.

1.1 Response of the EM to shock stimuli

The basic physical phenomena underlying the initiation of heterogeneous high explosives due to shock waves are finite rate chemical reactions involved in the conversion of solid explosive to gas reaction products at localized “hot spots” or more generally at localized energy sources. Void collapse, visco-plastic effects, multiphase reactions, shear banding, adiabatic gas compression, friction and shock reflections from internal imperfections, all of these mechanisms have been proposed as energy sources. Because the relative importance of each of these mechanisms is still subject to considerable conjecture, a simple ordering of materials by shock sensitivity is not possible. Indeed, the shock required to initiate an EM charge is dependent on:

- The microstructure, which determines the nature of the hotspots,
- The chemistry, which determines the response
- The macrostructure, which determines the propagation of the response.

Microstructural parameters that can influence the response to shock include particle size, particle distribution, particle shape, intragranular porosity/voids and extragranular porosity/voids. Macrostructural parameters that can influence the response to shock include density, intrinsic sensitivity, total solids content, mechanical properties, voids and cracks.

EMs should, wherever possible, have the following characteristics:

- High resistance to damage
- Non friable
- Toughness (high elongation with plastic failures, particularly at low temperature limits and high loading rates, low glass transition temperature ingredients);
- Good mechanical properties with low elastic modulus binders;
- High specific heats and heats of fusion polymers to encourage hot spot quench
- Low sensitivity components;
- Particle distributions that are optimum for binder wetting and particle to particle bond strength
- Minimum porosity
- Reduced total solids level.

1.2 Response of the EM to thermal stimuli

Cook-off involves chemistry and physics and covers a diverse range of subjects such as combustion, material properties and thermal explosion theory. Two phases have to be distinguished:

- The pre-ignition phase where the combined thermal, chemical and mechanical behaviour of decomposing energetic material has to be determined. To predict the evolution of the energetic material state during the thermal insult, the effects of thermal expansion, mechanical loading, phase transformation, and chemical decomposition have to be captured. This includes elasticity, volumetric and deviatoric creep, thermal expansion, chemical decomposition, porosity and phase change. In this phase, the mechanical response of the case is quasi-static.

- The post-ignition phase where the mechanical response of the case becomes dynamic. The dynamic response of the energetic material is anticipated to be strain rate, stress rate, and temperature dependent. Combustion is heavily dependent on thermal damage. Specifically increased surface area and pressure have an important role to play.

The key factor in determining the final violence of reaction is the order of magnitude of the pressure increase, i.e. the pressurization rate. This pressure increase will be controlled by the dynamic interaction between:

- The external and internal surface area available for burn (damage influence)
- The burn rate (flame spread rate influence),
- The venting to the outside (confinement influence).

EM properties that can influence the response to thermal stimuli include:

- Thermal properties that control the heat flow, ignition and growth of reaction. These include the thermal conductivity and the ignition temperature.
- Mechanical properties that determine the ability of the energetic material to flow into gaps to block vent path or to sustain internal pressures and deflagration behaviour.

Some recommendations regarding the EM to be used are.

To prevent damage by:

- Decreasing subsurface porosity produced
- Minimizing cracks and voids formation
- Minimizing molten phase

To prevent high flame spread rate by:

- Resisting or reducing the propagation of flames in the early stages of the growth of the reaction
- Limiting void growth if ignition occurs in the solid phase (i.e. Melting Temperature < Critical Temperature)
- Increasing pressure deflagration limit
- Decreasing thermal conductivity

2. The Munition Design

2.1 Hardware material selection and design

When designing a munition, mitigation technologies and design tradeoffs can be integrated into the design of the case to reduce the level of reaction. These technologies are divided into three types:

1. Barrier technologies aiming to prevent or/and mitigate the effects of the IM stimuli.

2. Venting/de-confining technologies aiming to release/prevent the catastrophic build-up of pressure due to the reaction of the energetic material if reaction occurs.
The critical parameters for designing a suitable venting system are the rate of pressurization and the rate of pressure release through venting. Venting can be achieved either through the natural disruption of the case (this is for example the case for lightly confined systems that are usually able to break open once the EM ignites) or the utilization of mitigation techniques (this is for example required for heavily confined casing).

   - Concerning the natural venting, a tradeoff needs to be made between performance and IM reaction level for the considered case thickness and strength. The following Table compares IM related advantages and disadvantages between some natural venting technical solutions.

Table 5: Comparison of natural venting technological solutions

	Advantages	Disadvantages
Thick vs. Thin case	Higher shock attenuation Higher protection against impact Lower temperature increase vs. time	Smaller venting after perforation Higher pressure build up Lower critical diameter Higher weight
High strength vs. Low strength case	Higher performance Lower pressure build up (if brittle)	Higher weight
Metallic vs. Non metallic case	Higher protection against impact Lower cost	Higher pressure build up

   - Concerning the mitigation techniques, the venting systems can be divided into two basic types, active and passive.

     i. Active systems rely on the initiation of an energetic device to cut open the case or create sufficient weakness to allow a relatively benign separation at a certain pressure.
     ii. Passive systems rely on chemical or physical changes within specific materials to allow the creation of vent holes or the benign expulsion of end plates/closures.

3. In some cases the technology can both act as a barrier and a venting system.

A compilation of mitigation technologies is presented in Table 6.

Table 2: Mitigation Technologies relevant to munitions design and possible localizations

Technology Type	Mitigation Technology	Mechanism	Applications/Locations
Barrier	Intumescent paint	Increases time to reaction to thermal stimuli	External casing surface
	Bore mitigant foam	Reduces impact loads from propellant debris.	Rocket motor conduit
Venting	Fusible devices (plastics, metals)	Melts at temperatures well below the ignition temperature providing a usually small vent path.	Within end closures/caps
	Forward/aft venting plates	Allows pressure release through a large vent.	
	Mechanical release	Releases a confining end closure at a pre-determined pressure or temperature.	
	Stress riser groove	Allows the case to fail along a thinner area when pressure builds up.	External casing surface
	Preferential insulation	Allows the case to fail along a non-insulated or less insulated area.	
	Case cutters	Cut through the munition casing at a pre-determined pressure or temperature.	
	Bonded Structures	Lose mechanical strength at a temperature well below the ignition temperature during thermal exposure. Under impact loads, perforation of the case creates a large entry and exit hole for subsequent venting. Reduces number of possible resultant hazardous fragments.	Casing
	Combustible cartridge case	Allows the case to fail through a thermal decomposition of the casing	
	Pre-emptive ignition devices	Ignites the EM prior to its auto-ignition temperature	Internal
	Vented booster	Prevents pressure build up following the booster ignition	Junction Booster/Casing
Dual-Purpose	Internal liner	Attenuates shock and bullet impacts and provides a vent path when thermally decomposed	Between energetic material and casing

2.2 Energetic Material Charge Design

Three design parameters could be considered:

- The charge dimensions. Designing a charge that is below the critical diameter when confined is certainly the most efficient way of avoiding a detonative event. Nevertheless, this is possible only for munitions components not required to detonate when functioning, i.e. the propulsion section.
- The presence of external gaps (nose gap, base gap or surface voids for example). These voids are either designed to allow thermal expansion of the EM at the working temperatures (thermal shrinkage or expansion) or are inherent to the production process. To prevent compressive heating of air trapped, friction or shear, removing air, improving the production quality control, removing irregularities from case surface, and using fillers (foam and felt mitigants) are possible solutions.
- The use of dual EM charges, one being less sensitive than the other one.

3. The packaging Design

The principal roles of munition packaging are to provide protection for the munition against credible stimuli and to reduce the projection of explosive effects should the munition initiate.
Any IM packaging solutions must take in account the following constraints that have a major impact on the choice of available materials and technologies:

- Logistical and tactical storage and operational considerations.
- For large numbers of relatively inexpensive munitions e.g. artillery shells, the cost of implementing the solution needs to be minimal.
- Environmental impact.

Akin to the techniques used for munition design, three principles can be applied to the design and configuration of the packaging.

3.1. Reduce the stimuli energy input into the munition.

The only method applicable for packaging is the use of barriers. The type and configuration of any barriers will depend on the particular stimulus to be mitigated and any logistic constraints (such as weight, size etc.). Three types of barriers can be considered:

a. Mechanical Impact Barriers

Barriers suitable for defeating a mechanical threat do so by either stopping or decreasing the kinetic energy of the impactor. The important parameters in this process are the penetrator's length, diameter, velocity, density and strength and the barrier's density, strength, geometry and energy release.

The difficulty in designing the best barrier resides in the large threat magnitude. Each barrier is therefore application and threat-design specific. The tendency nevertheless is to design multicomponent armors that combine layers of dissimilar materials, e.g. usually a hard material to deform/strip the projectile and a somewhat flexible material (spall liner, fabric,…) to slow down the projectile and/or the debris.

These barriers need to be located in or around the packaging so that the sensitive parts of the munition (i.e. the energetic materials) are protected from impact from all possible angles. Beyond the limit of cost, the occupied volume of the usually retrofitted installed materials and the weight are critical (and major materials selection concern).

Five main classes of materials and five main classes of material combinations achieved through multilayered materials or "sandwich structures" are identified in Table 7 and Table 8. Concerning cost issues, in general, materials get more expensive as one proceeds through the classes, just as the cost of protection increases with the level of safety. Other concepts such as Non-Energetic Reactive Armor (NERA). Explosive Reactive Armor (ERA), Electromagnetic Armor, Smart Armors and Active Armors are not described in this section because generally used at a platform level.

Table 7: Example of Energy absorber materials

Materials	Example	Performance/Principles of operation
Geo materials	Granular materials (Pumice, soil…)	• See "shock impact barriers" section below
Polymers	Simple fabric (nylon) Polymer foams	
Metals	Steel such as Rolled Homogeneous Armor (RHA), Cast Homogenous Armor (CHA), High Hardness Armor (HHA) Titanium such as Ti-6Al-4V Aluminium Alloys such as Aluminium-magnesium, Aluminium-magnesium-zinc, Aluminium-copper-manganese	• Metals absorb the projectile kinetic energy through plastic deformation. • Metals with high density are more efficient against high velocity projectiles and metals with high strength more efficient for low velocity projectiles. • Steel offers the best compromise between cost and resistance to penetration of all of the metals but at the expense of added weight to the application. • Titanium provides higher mass efficiency than steel and aluminium alloys but at a higher cost. • Aluminium alloys are comparable to steel in cost and penetration resistance, but require a much greater thickness. • Titanium and aluminium weight savings compared to steel is between 25% and 40% with aluminium having better machining and welding capabilities than Titanium.
Polymer matrix composites	Fiberglass Aramid Fiber Polyethylene fiber composites	• Can provide equivalent ballistic protection to metals but at reduced areal densities.
Ceramics	Alumina (Al_2O_3) Boron Carbide (B_4C) Silicon Carbide (SiC) Titanium Diboride (TiB_2)	• Ceramics absorb the projectile energy through fracture of the ceramic. • Ceramic have excellent hardness and strength properties that cause most penetrators to break upon impact, but are susceptible to brittle failure. • Pressureless sintered alumina is the most widely used due to its low cost, while reaction-bonded or hot pressed B_4C offers the best combination of performance and low weight.

Table 8: Sandwich structures

Concept	Principles	Performance/Principles of operation
Metallic hybrid laminates	Consists of a hard face that defeats the projectile by fracturing and a soft back that catches the debris.	• Developed to improve performance over HHA. • Difficult to form and weld.
Metal-Composite hybrids	Consists of a metal plate backed by a polymer matrix composite.	• Developed to minimize debris.
Metal-Ceramic hybrids	Consists of a hard ceramic face that defeat the projectile by breaking, shattering, eroding, dwelling or conditioning the projectile before it hits a hard metallic backing.	• Metal-encapsulated ceramic have been developed to defeat medium and large caliber threats at a velocity of 1.3 to 1.6 km/s.
Ceramic-Composite hybrids	Consists of a ceramic backed by a polymer matrix composite.	• More effective than metal backed designs on a weight basis. • The large elastic and plastic deformations that result in the composite require additional engineering as well as design requirements for multi-hit capabilities.
Metal-Ceramic-Composite hybrids	Consists of Metal-Ceramic hybrids backed by a soft polymer matrix composite.	• Developed to minimize weight and debris, and maximize performance. • By combining metal or fiber composites as a backing material, the resultant ceramic composite armors offer excellent mass and space efficiencies, particularly for light and medium class armors. • Assures a protection level 2-3 times better than RHA with a weight 2-3 times less.

Making benefit of the tumbling of moderate Length to Diameter ratio (L/D) projectile, mechanical impact barrier designers have also designed spaced targets that deflect the projectiles before defeating them. They consist of (n) homogeneous metal plates separated by (n-1) air gap or a sandwich target separated from a thin steel plate by an air gap. Against small arms projectiles, the performance of these barriers can be twice as effective as RHA on a weight basis.

b. Thermal Barriers

The key properties of effective thermal barriers are thermal conductivity and heat capacity. Possible technological solutions are given in the following table.

Table 9: Thermal barrier Types

Solution	Principles Of Operation
Fire-retardants	Increased temperature causes retardant materials to inhibit the combustion process.
Ablatives	Increased temperature causes a chemical transformation of the exposed surface forming a heat resistant layer. This layer requires further energy for removal.
Surface barriers	A gas-proof thermally insulating layer reduces heat transfer.
Intumescent paint	Exposure to heat transforms the paint into a rigid foam (by gas evolution followed by carbonisation) with low thermal conductivity. Preferential shielding can also be achieved using such a solution.

c. Shock Impact Barriers

Effective materials for shock attenuation need to be able to reduce acoustic and shock waves, peak overpressure, reflected overpressure, reflected peak overpressure, impulse and after-burn effects. This can be accomplished through:

i. Shock decoupling. A shock propagates with a given speed, pressure and particle velocity relative to the shock impedance of the material through which it is propagating. Shock modification occurs when the shock wave encounters a discontinuity. At the interface with a material of different shock impedance, the shock is usually decoupled in a reflected and a transmitted shock. The reflected and the transmitted shock peak pressures can be reduced using a material with appropriate impedance.

ii. Shock energy absorption/dissipation. Shock energy can be reduced by using the available energy to create irreversible material changes such as crushing of porous media or phase changes. Highly crushable, low compressive strength and high degree compressible materials are good candidates.

To prevent the barrier material to become a threat to the munition due to its projection or to become a more stringent threat to the surrounding munitions due to a shock reflection following a non-adapted impedance (high impedance mismatching results in increased reflection), it is possible to use materials that will break into small pieces or to use porous materials such that the shock can pass trough.

Examples of possible technological solutions are given in Table 10.

Table 10: Shock impact barrier Types

Solution	Examples
Shock decoupling	Water, water spray, water deluge
	Two phases materials (Confined stabilized aluminium foam, Aqueous foam)
	Multilayered materials with adapted impedance (Steel/PMMA, Aluminium/Plastic/Air/Plastic…)
Energy absorption	Materials with high extragranular porosity/voids such as geo-materials in a confining skin (sand-cement, pumice, cement-bonded wood fiber)
	Materials with high intragranular porosity/voids such as pumice, stone sponge, honey comb filled with granular materials (or not), low density shock absorbing concrete, high porosity shock absorbing chemically bonded ceramic …

3.2 Reduce the effects of packaging configuration

If the munition reacts to a stimulus non-denotatively, confinement within the packaging could increase the severity of the response. If this is considered likely, the packaging will need to include some form of venting device or system to dissipate excess internal pressure build up. This is akin to the technique used for munitions venting. In addition to venting systems, the packaging needs to be designed so that munition-venting devices can operate effectively.

3.3 Reduce the projected explosive effects

If the packaged munition reacts to a stimulus and produces explosive effects beyond the packaging that are considered unacceptable, it will be necessary to mitigate these effects. This is often referred as shock hardening. Mitigation of these effects can be achieved by:

- The use of suitable barriers within the packaging to absorb energy (shock/thermal). It is recommended to refer to the section related to the reduction of the stimuli energy input into the munition for more information on the possible technologies to be used.

- Or by appropriate spatial dispersion of the munitions to prevent the reacting munition to become or to create a more stringent threat to the other munitions such as in the diagonal effect. Diverters within munitions can also be used to prevent this geometry dependent effect.

CHAIRMAN OF THE JOINT CHIEFS OF STAFF MANUAL

J-8 CJCSM 3170.01C
DISTRIBUTION: A, B, C, J, S 1 May 2007

OPERATION OF THE JOINT CAPABILITIES INTEGRATION AND DEVELOPMENT SYSTEM

References: See Enclosure I.

1. Purpose. This manual sets forth guidelines and procedures for operation of the Joint Capabilities Integration and Development System (JCIDS) regarding the development and staffing of JCIDS documents in support of reference a.

2. Cancellation. CJCSM 3170.01B, 11 May 2005, "Operation of the Joint Capabilities Integration and Development System," is canceled.

3. Applicability. In accordance with references a and b, this manual applies to the Joint Staff, Services, combatant commands, Defense agencies, Department of Defense (DOD) field activities and joint and combined activities. It also applies to other agencies preparing and submitting JCIDS documents in accordance with references a, b, and c.

4. Summary. Guidance on the conduct of JCIDS analyses, the development of key performance parameters, and the JCIDS staffing process are provided in this manual. It also contains procedures and instructions regarding the staffing and development of joint capabilities documents (JCDs), initial capabilities documents (ICDs), capability development documents (CDDs), capability production documents (CPDs), and joint doctrine, organization, training, materiel, leadership and education, personnel, and facilities (DOTMLPF) change recommendations (DCRs).

5. Summary of Changes

a. Provides additional guidance on the capabilities-based assessment (CBA) process and provides guidelines for use in determining the adequacy of the analysis.

b. Per reference d, implements streamlining changes to the staffing process.

c. Per reference e, provides new guidance on the incorporation of the safe weapons endorsement.

d. Per reference f, incorporates the mandatory force protection and survivability key performance parameters (KPP).

e. Per reference g, incorporates various changes to include: incorporation of joint capability areas (JCA); defining a more rapid process for updating KPPs; deleting the post independent analysis as a requirement; adding the requirement for a CBA study plan for Joint Requirements Oversight Council (JROC)-directed CBAs; including an alternate CONOPs in the FSA; requiring a more complete description of the threats and mitigation strategy; and permitting the use of CONOPs to initiate a CBA.

f. Per reference h, provides new guidance on implementation of a mandatory sustainment KPP and selectively applied system training and energy efficiency KPPs; additional guidance on a process to identify appropriate KPPs and key system attributes (KSA) for each CDD; and direction to identify the timeframe when capabilities are required.

g. Per reference i, implements new guidance on timelines for comment resolution and the process for ensuring critical comments are resolved in a timely manner.

h. Removes the requirement for functional process owners (FPOs) to provide an endorsement statement.

i. Removes the requirement for an insensitive munitions certification or waiver per JROC direction.

6. Releasability. This manual is approved for public release; distribution is unlimited. DOD components (to include the combatant commands), other federal agencies, and the public may obtain copies of this manual through the Internet from the CJCS Directives Home Page--http://www.dtic.mil/cjcs_directives.

7. Effective Date. This manual is effective upon receipt.

WALTER L. SHARP
Lieutenant General, USA
Director, Joint Staff

Enclosures:
A -- Capabilities-Based Assesment Process
B -- Performance Attributes and Key Performance Parameters
C – JCIDS Staffing Process
D -- Joint Capabilities Document
E -- Initial Capabilities Document
F -- Capability Development Document
G -- Capability Production Document
H -- Joint DOTMLPF Change Recommendation
I -- References
GL -- Glossary

(INTENTIONALLY BLANK)

DISTRIBUTION

Distribution A, B, C, and J plus the following:

	Copies
Secretary of Defense	2
Under Secretary of Defense for Acquisition, Technology and Logistics	2
Under Secretary of Defense (Comptroller)	2
Under Secretary of Defense for Personnel and Readiness	2
Under Secretary of Defense for Policy	2
Under Secretary of Defense for Intelligence	2
Assistant Secretary of Defense (Health Affairs)	2
Assistant Secretary of Defense (Networks & Information Integration)/DOD CIO	2
Director, Program Analysis and Evaluation	2
Director, Operational Test and Evaluation	2

(INTENTIONALLY BLANK)

LIST OF EFFECTIVE PAGES

The following is a list of effective pages for. Use this list to verify the currency and completeness of the document. An "O" indicates a page in the original document.

PAGE	CHANGE	PAGE	CHANGE
1 thru 4	O	F-1 thru F-8	O
i thru x	O	F-A-1 thru F-A-8	O
A-1 thru A-18	O	G-1 thru G-6	O
B-1 thru B-10	O	G-A-1 thru G-A-8	O
B-A-1 thru B-A-6	O	H-1 thru H-8	O
C-1 thru C-14	O	H-A-1 thru H-A-6	O
D-1 thru D-4	O	I-1 thru I-2	O
D-A-1 thru D-A-4	O	GL-1 thru GL-22	O
E-1 thru E-4	O		O
E-A-1 thru E-A-6	O		O

(INTENTIONALLY BLANK)

RECORD OF CHANGES

Change No.	Date of Change	Date Entered	Name of Person Entering Change

(INTENTIONALLY BLANK)

TABLE OF CONTENTS

ENCLOSURE PAGE

A CAPABILITIES-BASED ASSESSMENT PROCESS A-1

Capabilities-Based Assessment (CBA) A-1
Exemplar CBA Process Flows A-3
CBA Study Team Organization and Study Plan A-7
Functional Area Analysis (FAA) A-8
Functional Needs Analysis A-11
Functional Solution Analysis A-13
Joint Concept Technology Demonstration (JCTD) and Advanced Concept Technology Demonstration (ACTD) Transition A-17
Prototypes A-18
Joint IED Defeat Initiative Transition A-18

B PERFORMANCE ATTRIBUTES AND KEY PERFORMANCE PARAMETERS B-1

Performance Attributes and Key Performance Parameters B-1
Required KPPs B-2
Development of KPPs B-7
Changing KPPs B-10

Appendix A – Attributes for Potential Key Performance Parameter Designation B-A-1

C JCIDS STAFFING PROCESS C-1

Process Overview C-1
Certifications and Weapon Safety Endorsement C-4
Staffing Process C-6
Waivers C-13

D JOINT CAPABILITIES DOCUMENT D-1

General D-1
JCD Focus D-1
JCD Development and Documentation D-2
JCD Validation and Approval D-3
JCD Publication and Archiving D-3

ENCLOSURE PAGE

Appendix A – Joint Capabilities Document Format D-A-1

E INITIAL CAPABILITIES DOCUMENT E-1

General E-1
ICD Focus E-2
ICD Development and Documentation E-2
ICD Validation and Approval E-3
ICD Publication and Archiving.....E-3

Appendix A – Initial Capabilities Document Format E-A-1

F CAPABILITY DEVELOPMENT DOCUMENT F-1

General F-1
CDD Focus..... F-4
CDD Development and Documentation..... F-4
CDD Validation and Approval..... F-5
Certifications and Weapon Safety Endorsement..... F-5
Formal CDD Staffing F-5
CDD Review and Revalidation..... F-6
CDD Publication and Archiving F-6
System Capabilities F-6
Key Performance Parameters F-6

Appendix A – Capability Development
Document Format F-A-1

G CAPABILITY PRODUCTION DOCUMENT G-1

General G-1
CPD Focus G-3
CPD Development and Documentation G-3
CPD Validation and Approval G-4
Certifications and Weapon safety Endorsement G-4
Formal CPD Staffing..... G-4
CPD Review and Approval G-4
CPD Publication and Archiving..... G-5
System Capabilities G-5
Key Performance Parameters G-6

Appendix A – Capability Production
Document Format G-A-1

ENCLOSURE PAGE

H JOINT DOTMLPF CHANGE RECOMMENDATION H-1

Purpose H-1
Procedures -- Integrating Joint DCRs Into the JROC Process H-1
Formal Change Recommendation Review Process H-3
Implementation of Joint DCRs H-3

Appendix A – Joint DOTMLPF Change Recommendation Format H-A-1

I REFERENCES I-1

GLOSSARY GL-1
Part I – Acronyms GL-1
Part II – Definitions GL-5

FIGURES

A-1 Key Strategic Documents A-2
A-2 CBA Flow and Resulting Documents A-3
A-3 Exemplar Combatant Command CBA Process A-4
A-4 Exemplar FCB CBA Process A-5
A-5 Exemplar Sponsor CBA Process A-6
B-1 CDD and CPD Attributes B-9
C-1 Gatekeeping Process C-1
C-2 JROC Interest Staffing Process C-7
C-3 Joint Integration Staffing Process C-10
C-4 Joint Information and Independent Staffing Process C-11
H-1 Joint Staff DOTMLPF FPOs H-5

TABLES

A-1 Functional Area Analysis (FAA) Guide A-10
A-2 Functional Needs Analysis (FNA) Guide A-13
A-3 Functional Solutions Analysis (FSA) Guide A-16
C-1 Staffing Matrix C-4
D-1 JCD Linkage to Program Documents D-2
E-1 ICD Linkage to Program Documents E-1
F-1 CDD Linkage to Program Documents F-2
G-1 CPD Linkage to Program Documents G-2

(INTENTIONALLY BLANK)

ENCLOSURE A

CAPABILITIES-BASED ASSESSMENT PROCESS

1. Capability-Based Assessment (CBA). The CBA is the analysis part of the JCIDS process that defines capability needs, capability gaps, capability excesses, and approaches to provide those capabilities within a specified functional or operational area. Based on strategic guidance and centered on the Joint Operations Concepts (JOPsC) reference j, CBAs become the basis for the development of JCIDS documents and result in the potential development and deployment of integrated, joint capabilities.

a. A CBA may be based on a JROC approved Joint Integrating Concept (JIC); a CONOPs endorsed by a combatant command, Service, or defense agency; or an identified operational need. A CBA may be initiated by any number of organizations, to include combatant commands, Functional Capabilities Boards (FCBs), Services, and Defense agencies.

b. The CBA process is rooted in a chain of strategic guidance documents. The National Security Strategy, the National Defense Strategy (NDS) and the National Military Strategy (NMS) provide the overarching description of the country's defense interests, objectives, and priorities. In addition, the Strategic Planning Guidance, the Contingency Planning Guidance, and the Quadrennial Defense Review Report contain further refinement of objectives and priorities, and help provide a framework for a CBA.

c. This guidance is further refined at the battle space level in reference j, as shown in Figure A-1. The Joint Operations Concepts -- consisting of the Capstone Concept for Joint Operations (CCJO), and the various Joint Operating Concepts (JOCs), the Joint Functional Concepts, and the JICs -- provide a common vision of how the Department of Defense would like to operate in the future, along with the desired attributes of the force.

d. These documents provide the foundation for a formal JCIDS CBA. The major outputs of a CBA are: the functional area analysis (FAA), a description of the mission area being assessed; the functional needs analysis (FNA), an assessment of how well the current or programmed force performs that mission; and the functional solutions analysis (FSA), an analysis of possible solutions to shortcomings in mission performance.

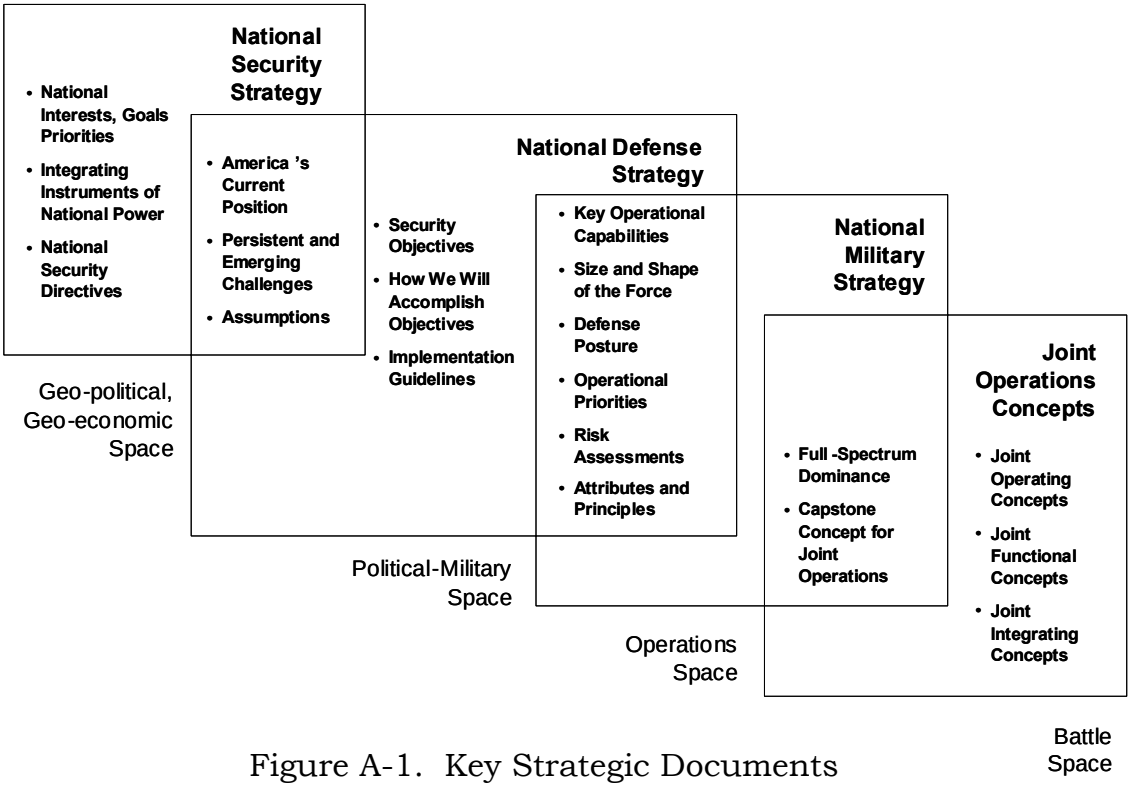

Figure A-1. Key Strategic Documents

e. When a CONOPs is used as the basis for a CBA, it must be first endorsed by the JROC, combatant command, or sponsoring DOD component. CONOPs that have not been staffed through the JROC for endorsement must be attached as an appendix to the JCD, ICD, or joint DCR so that the reviewers can understand the context used to identify and evaluate the capabilities identified. There is no strict format for a CONOPs, but it should cover the following areas at a minimum: the problem being addressed, the mission, the commander's intent, an operational overview, functions or effects to be carried out/achieved, and the roles and responsibilities of affected organizations.

f. Figure A-2 shows the general flow of the CBA and the key documents that may result from a CBA. In particular, combatant commands and FCBs may sponsor a JCD resulting from an FAA and FNA into the Joint Staff for JROC approval. For a CBA that will lead to an ICD, a sponsor must participate in the CBA as early as possible to ensure the resulting document is a logical result of the assessment. The sponsor-initiated JCIDS analyses also provide the necessary information for the development of joint DCRs.

g. The CBA should include information and analysis that will support development of integrated architectures that are used to fully define solutions to capability gaps; furthermore, the CBA can use existing architectures as means of assessing current and programmed approaches to the military problems being assessed. The results of the CBA are also used to support an analysis of alternatives (AoA) when required. In addition, joint experimentation

(reference j) and technology development are linked to the CBA process. The results of experimentation may be used as input to the CBA; or, the results of the CBA may direct new experimentation efforts or identify areas where additional technology development is required to deliver the required capability. Due to the wide array of issues that will be considered through the CBA process, the breadth and depth of the analysis must be tailored to suit the issue. The depth of analysis for a potential acquisition category (ACAT) III program is not expected to be the same as it would be for a potential ACAT I program. The analysis must be sufficient for the validation authority to validate the capabilities and capability gaps identified.

h. Organizing and executing a successful JCIDS CBA is a significant challenge. The JOpsC are specifically designed to induce progress in the Department of Defense, and achieving its aims as well as the demands of the strategic guidance poses significant challenges to the force. Consequently, a CBA, particularly one aimed at a broad mission area, must be conducted with a capable joint team that can bring the necessary spectrum of expertise to bear on the problem. While this manual outlines the CBA process, other documents (such as references k, l, and m) offer much more comprehensive advice in performing such analyses.

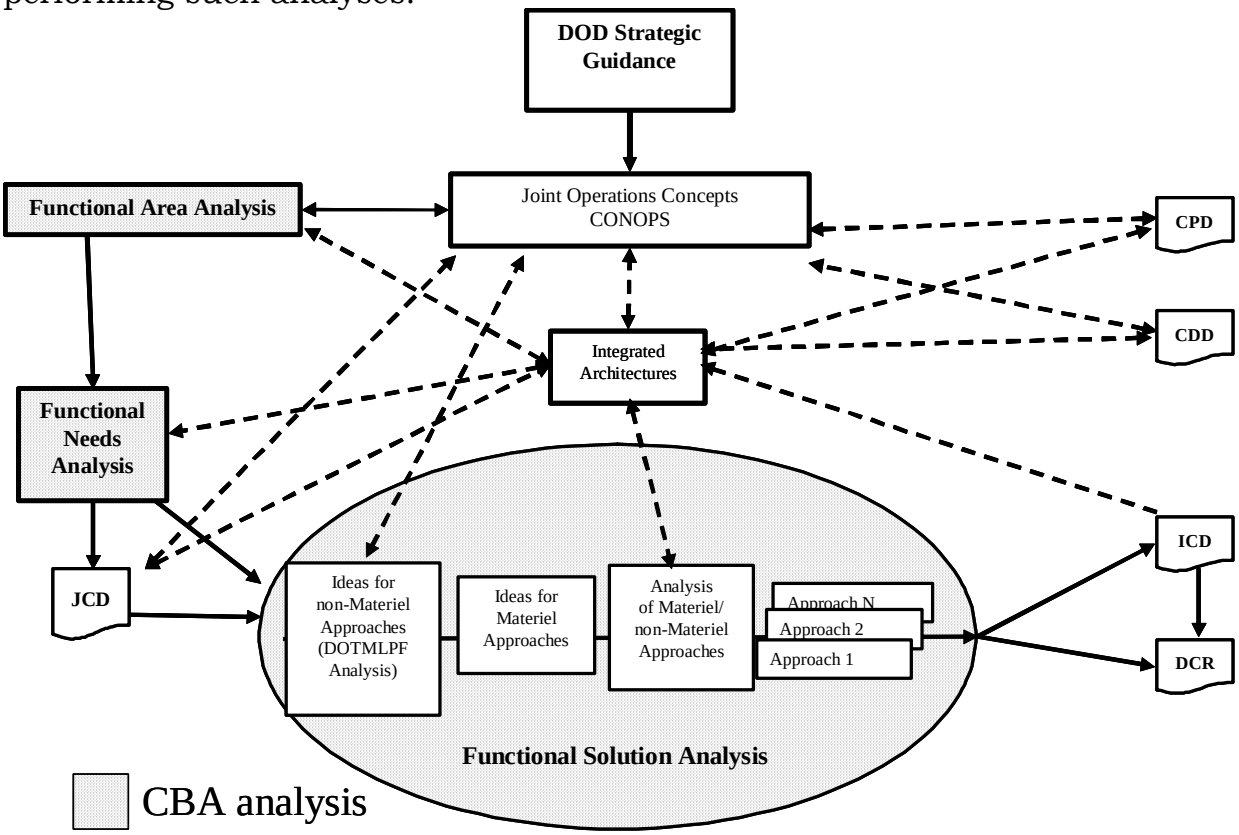

Figure A-2. CBA Flow and Resulting Documents

2. Exemplar CBA Process Flows

a. Figure A-3 describes the CBA process as it could be used by a combatant command. The combatant commander may initiate the CBA process based on: a CONOPs developed for the command's Unified Command Plan (UCP), Joint Strategic Capabilities Plan (JSCP), or other assigned missions; a JROC directed and approved JIC where the combatant command is the lead; or the results of a Senior Warfighter Forum (SWarF). The CBA performed by the combatant command may consist of only the FAA and FNA. The results of these analyses will be documented in a JCD submitted by the combatant command for JROC validation. The JROC will assign a Service or agency as appropriate to perform the necessary FSAs and develop the requisite DCRs or ICDs to support AoAs (if required) and initiate the development of solutions to the gaps identified by the combatant command. The combatant command and the JROC will also identify those gaps where the department will take risk and not pursue solutions.

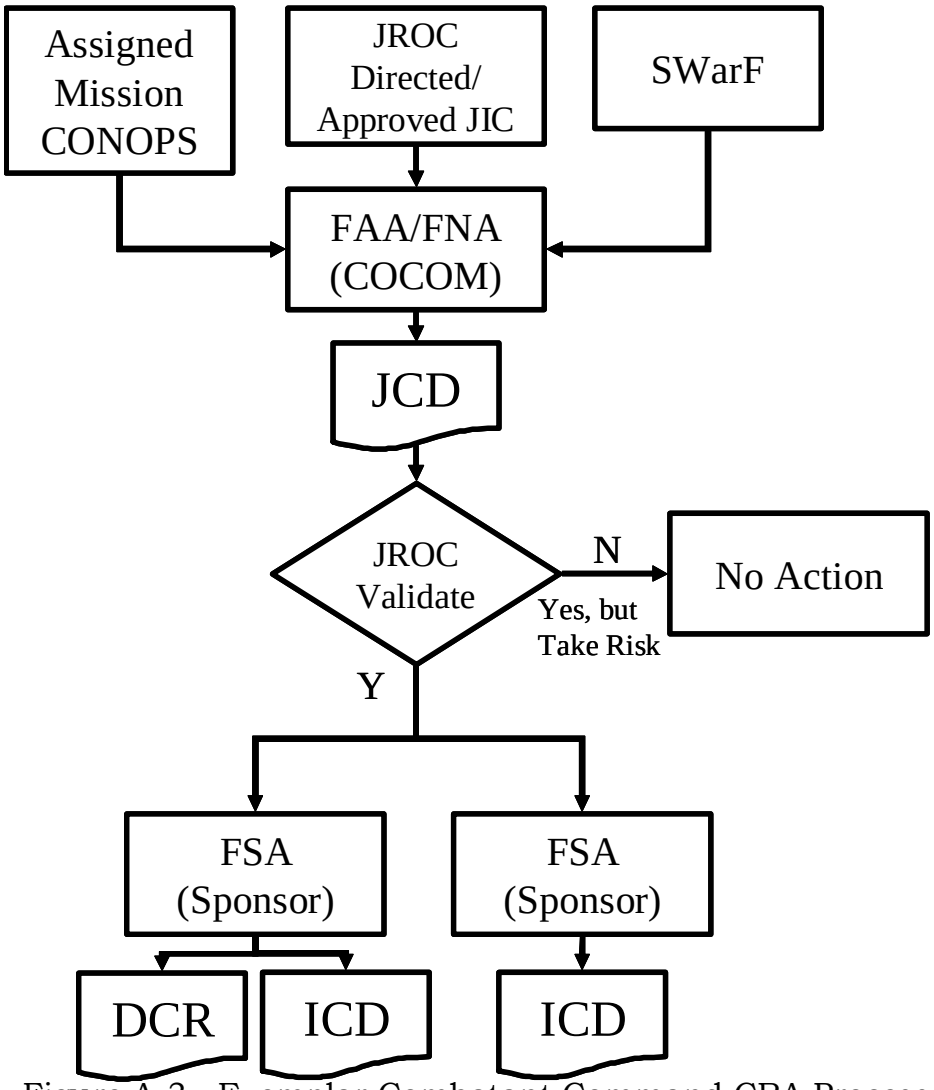

Figure A-3. Exemplar Combatant Command CBA Process

b. Figure A-4 describes the CBA process as it could be used by an FCB. The FCB initiates the CBA process based on a JROC-directed and approved JIC where the FCB is the lead. The CBA performed by the FCB will consist of only the FAA and FNA. The results of these analyses will be documented in a JCD submitted by the FCB for JROC validation. The JROC will assign a Service or agency as appropriate to perform the necessary FSAs and develop the requisite DCRs to initiate non-materiel changes or ICDs to support AoAs (if required) and to initiate the development of solutions to the gaps identified by the FCB. The FCB and the JROC will also identify those gaps where the department will take risk and not pursue solutions.

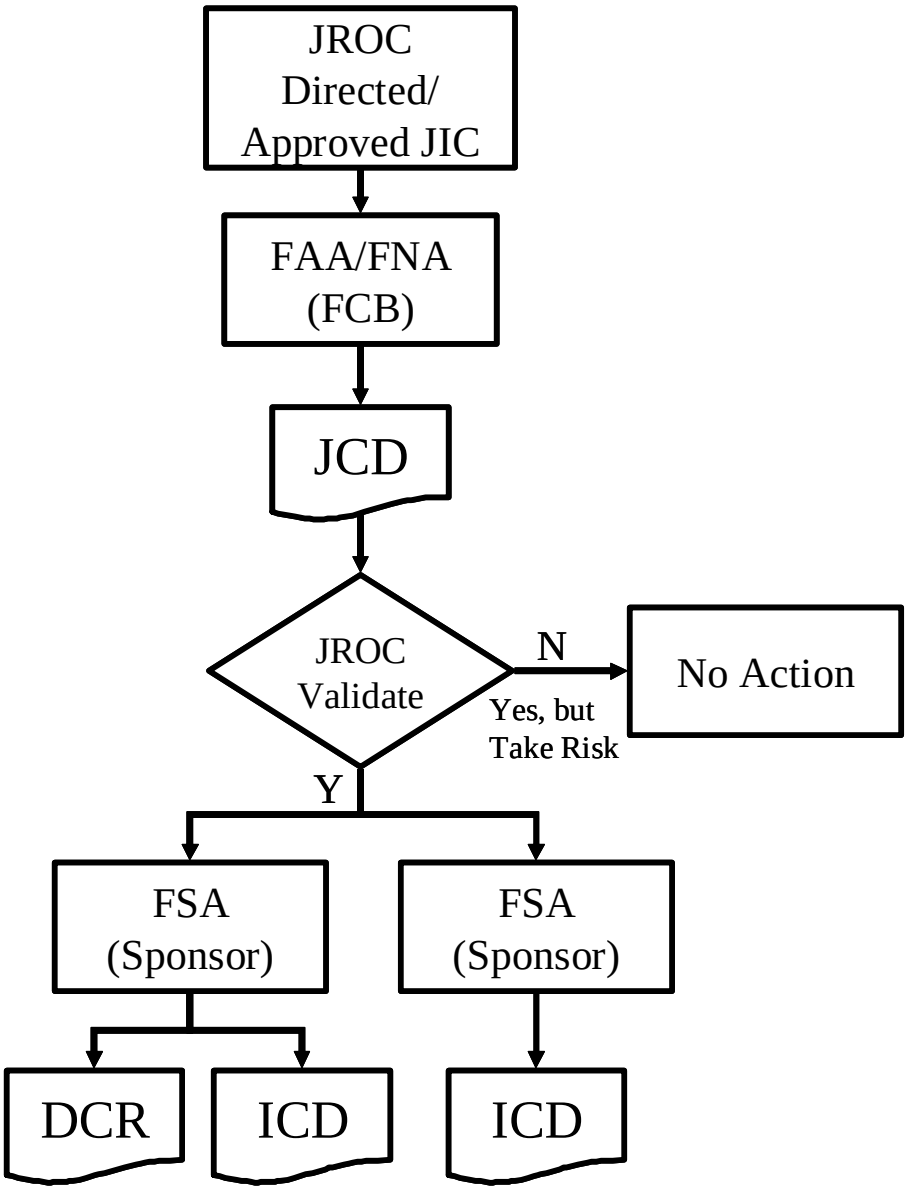

Figure A-4. Exemplar FCB CBA Process

c. Figure A-5 describes the CBA process as it could be used by a sponsor (Service or Defense agency). The sponsor may initiate the CBA process based on a sponsor CONOPs that is either derived from, or directly supports, the JOpsC or a valid operational need. The CBA performed by the sponsor begins with the FAA and FNA. At the conclusion of this portion of the CBA, the sponsor working with the lead FCB will determine whether or not to draft a JCD. If the assessment addresses a broad set of capabilities and gaps, then the development of a JCD is appropriate. If the assessment describes a very specific capability or gap unique to that sponsor, then it is more appropriate to continue the CBA with the performance of the FSA and the development of a DCR or ICD. The results of these analyses will be documented in a JCD, ICD, or DCR (as determined by the sponsor) and submitted by the sponsor to the

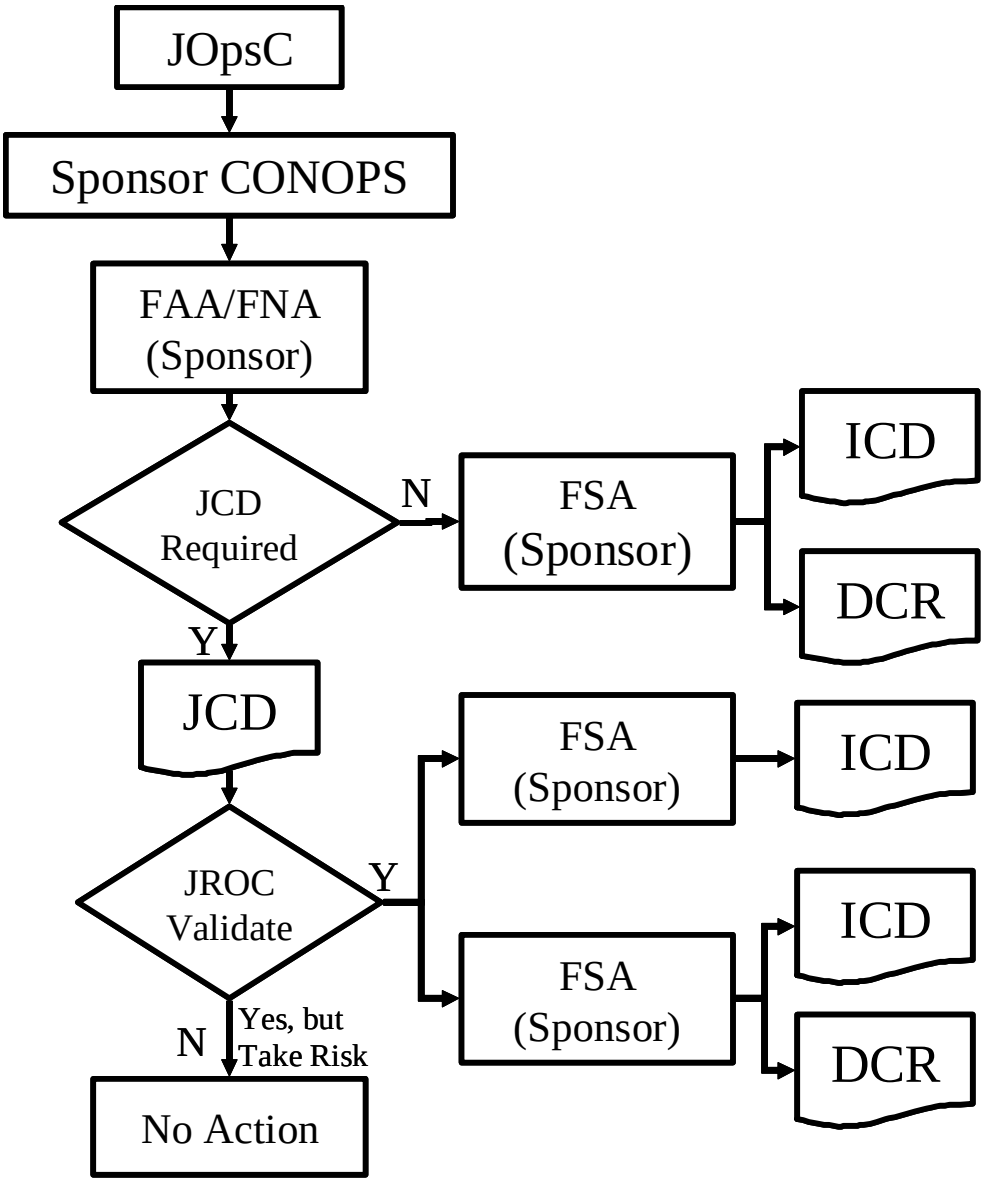

Figure A-5. Exemplar Sponsor CBA Process

JROC for validation. For the JCD, the JROC will assign an appropriate sponsor to perform the necessary FSAs and develop the requisite DCRs to initiate non-materiel changes or ICDs to initiate the development of solutions to the gaps identified by the FCB. For the ICD, the JROC will validate the gap and solution set as appropriate, or decide to take risk on the gap.

3. CBA Study Team Organization and Study Plan. The size and composition of a CBA study depends on the area being assessed, the time available to do the effort, and organization responsible for conducting the CBA. If directed by the JROC, the JROC will appoint a CBA team lead; otherwise, the organization initiating the CBA will identify the leader.

a. A CBA study team should contain at least the following types of expertise:

(1) knowledge of adversary objectives and capabilities;

(2) knowledge of current doctrinal approaches and capabilities;

(3) knowledge of possible technical (materiel) alternatives and risks;

(4) knowledge of possible policy and other non-materiel alternatives and risks;

(5) analytical capability to assess the effectiveness, costs, and risks of alternatives;

(6) ability to formulate and execute a joint assessment;

(7) ability to communicate findings and recommendations clearly and concisely; and

(8) knowledge of appropriate integrated architectures and the ability to analyze them.

b. The requirements above clearly show the need for a joint study team with a broad range of skills. While there are many options for finding and employing the necessary expertise, the point is that the assessment, to fully consider the breadth of solutions demanded by JCIDS, must be supported by expertise that knows the spectrum of possible solutions and can estimate their effectiveness. Sometimes necessary expertise lies outside expected channels, such as in other combatant commands, Defense agencies, and non-warfighting portions of the Services.

c. While only required for a JROC-directed CBA, every CBA should have a written study plan that clearly defines, scopes, and schedules the assessment. While this is not a required submission for CBAs initiated by the combatant

commands, Services, or agencies, it is a best practice that ensures a complete understanding of the scope of the problem being assessed. At a minimum, the study plan should contain the following:

(1) purpose;

(2) background and relevant strategic guidance;

(3) objectives;

(4) scope, including scenarios to be used, capabilities desired, functions to be assessed, doctrinal approaches to be assessed, and the time horizon of the assessment (near-, mid-, or far-term);

(5) methodology;

(6) CBA organization and governance;

(7) responsibilities;

(8) projected schedule; and

(9) references.

d. CBAs commissioned by the JROC must have their study plans coordinated through the Joint Staff/J-8 Deputy Director for Force Management, and the final study plan must be approved by the Joint Capabilities Board (JCB) or the JROC.

4. Functional Area Analysis. An FAA identifies the mission area or military problem to be assessed, the concepts to be examined, the timeframe in which the problem is being assessed, and the scope of the assessment. As noted in the sections above, a CBA is motivated by both the existence of military objectives to be achieved and by the publication of a concept or a formal CONOPs for achieving them. The FAA describes the relevant objectives and CONOPs or concepts, and lists the relevant effects to be generated. Since a capability is the ability to generate an effect, the FAA connects capabilities to the defense strategy via objectives, concepts, and CONOPs. Furthermore, the capabilities identified in the FAA also scope the assessment and identify which capabilities will be examined. The capabilities must be defined (with associated tasks, conditions, and standards) using the common lexicon for capabilities established in the JCAs. The definitions of the JCAs are maintained at www.dtic.mil/futurejointwarfare. The FAA identifies the joint interdependencies between Service and agency capabilities.

a. The mission area or military problem considered by the CBA must have operational context that is both relevant to the problem and the needs of the

defense strategy. As a result, the FAA should use either formally tasked operational and contingency plans for near-term assessments or the Defense Planning Scenarios (DPS) published by OSD under the Analytic Agenda (reference n). Furthermore, the scenarios must be chosen in such a way that the full spectrum of operational situations relevant to the defense strategy will be examined. Capstone documents such as the NDS, the NMS, and the CCJO provide several frameworks for describing the breadth of the strategy environment, and these documents should be used to select an adequate scenario sample. While it is important to scope the assessment to make it manageable, it is equally important that the assessment not be limited to a very narrow set of operational situations.

b. The military objectives of these scenarios provide a source for developing the list of capabilities to be examined. These capabilities, coupled with the scenarios, should be further refined in the Universal Joint Task List (UJTL) or Service or Defense agency task lists. At this point in the assessment, the emphasis should be on describing how the objectives would be achieved with the programmed force. The task representation, however, must also be able to account for the proposed concept or CONOPs, so some flexibility is required. The JCAs are currently the preferred method the Department of Defense uses for reviewing and managing capabilities; for the associated tasks, several frameworks, such as the UJTL, are readily available.

c. FAA conditions are derived from scenarios, and tasks are derived from capabilities needed to achieve the military objectives of those scenarios. The final output of the FAA is the standards, which are the set of metrics used to assess the programmed capabilities of the force in the FNA. A standard is a quantitative or qualitative measure for specifying the level of a performance of a task, and the FAA defines the standards for the CBA. Along with standards, the FAA should use attributes derived from the JOpsC and the basic information in the scenario to develop criteria for adequate mission performance. In most cases, these criteria will not be simple pass-fail criteria, but instead will represent the continuum of values. The FAA should develop these values using the strategic guidance so that the JROC and other bodies have sufficient information to evaluate risks.

d. For IT capabilities, the FAA identifies the operational tasks, conditions, and operational performance standards needed to achieve desired mission area outcomes appropriate for the business, warfighting, enterprise information environment, and DOD intelligence mission areas. It uses business area strategic plans, the enterprise transition plan, enterprise objectives, the approved business capabilities identified in the business enterprise architecture, industry best practices, and other sources as input.

e. Table A-1 represents a list of questions to ask about a completed FAA. It is not all encompassing, but being able to answer all of the questions indicates the analysis is probably sufficient to move forward to the FNA.

Table A-1: Functional Area Analysis (FAA) Guide

Item	**Requirement**	**Yes / No**	**Required Corrective Actions**
1	Does the FAA accurately portray the mission, function, or concept to be assessed?		
2	Does the FAA employ a set of relevant scenarios and military objectives?		
3	Do the conditions, as expressed by the scenarios, cover the breadth of the defense strategy and reflect current DOD priorities?		
4	Does the scope of the FAA address the issues but still allow the assessment to be done in a responsive amount of time?		
5	Are the desired capabilities directly linked to the military objectives of the scenarios?		
6	Does the task structure support a concise depiction of the military objectives and doctrinal approaches?		
7	Is the task structure flexible enough to accommodate approaches envisioned in applicable concepts or CONOPs?		
8	Are the standards derived from both the strategic guidance and the attributes in the CCJO?		
9	Are the evaluation criteria associated with the standards broad enough to allow subsequent analysis of the trades between effectiveness, cost, and risk?		
10	Does the FAA identify the timeframe when the capabilities are required?		
11	Does the FAA identify the Tier 1 and 2 JCAs applicable to the capabilities identified?		

e. DIA will produce an Initial Threat Warning Assessment (ITWA) to support the CBA. The ITWA will identify adversarial capabilities that could specifically affect missions and functions being assessed in the CBA. Contact the DIA Defense Warning Office, Acquisition Support Division for assistance:

(1) DSN: 428-4526

(2) JWICS: http://www.dia.ic.gov/homepage/homepages/ta2/homepage.htm

(3) SIPRNET: http://www.delphi-s.dia.smil.mil/intel/j2/j2p/irco/main.html

5. Functional Needs Analysis. The FNA assesses the capabilities of the current and programmed force to meet the relevant military objectives of the scenarios chosen in the FAA using doctrinal approaches. Using the standards and evaluation criteria described in the FAA, the FNA assesses whether or not an inability to achieve a desired effect (a capability gap) exists. The FNA also identifies any capability areas that may have overlaps or redundancies. These become opportunities to determine during the FSA whether there is unnecessary redundancy or overlap in solutions sets that can be streamlined to support developing solution sets for the validated gaps.

a. The FNA must first describe the gaps in terms of the scenarios assessed and the effects on achieving the relevant military objectives. It is likely that the gaps will not be consistent (or even applicable) across scenarios, so it is essential to link the gaps to their operational context.

b. The FNA must then assess the impact of the capability gap in terms of the risk to mission (the ability to achieve the objectives of the scenario), the risk to force (the potential losses due to the capability gap), and other important considerations, such as effects on allies and noncombatants. These assessments must be done using the standards developed for the FAA.

c. Using the programmed force and doctrinal approaches, the FNA should attempt to characterize whether the capability gaps are due to:

(1) proficiency (inability to achieve the relevant effect in particular conditions);

(2) sufficiency (ability to achieve the effect but inability to bring the needed force to bear due to force shortages or other commitments);

(3) lack of existing capability;

(4) need for recapitalization due to aging of an existing capability;

(5) policy limitations (inability to use the force as needed due to operational constraints); or

(6) other factors.

d. Finally, the FNA must list a set of gaps that the Department of Defense should address, or conclude that no pressing gaps exist. The gaps may not include all the capability gaps uncovered, but they must be the ones that pose unacceptable risks to achieving the aims of the defense strategy. Since the JCIDS process will ultimately decide which gaps are pervasive or important enough to commit to solving them, the suggested gaps must be directly linked to operational situations and consequences of failing to meet objectives. There is no firm rule for whether or not a capability gap will actually be acted upon; that decision is a complex function of the likelihood of the situation, the consequences of unfavorable outcomes, the pervasiveness of the gap across a multitude of situations, and the rough order or magnitude estimate of the costs of addressing the gap. The FNA should offer a prioritization of gaps that is directly linked to priorities in the strategic guidance, but the document must publish sufficient information to expose how these priorities were developed. While the FNA must present its conclusions concisely, it must also completely document the significant driving factors behind the recommended priorities to give senior leaders the information they need if they choose to make adjustments. The FNA priorities may be adjusted during the FSA once approaches are proposed, assessed, and costed, so the FNA must document the relevant information and not aggregate important factors into a single priority list.

e. For IT capabilities, the FNA assesses the ability of the current and programmed IT mission area systems and processes to deliver the capabilities the FAA identified under the full range of operating conditions and the outcome-based performance measures.

f. Combatant commands and FCBs will document the results of their CBA in a JCD at the conclusion of the FAA and FNA. Combat support agencies (CSAs) with designated functional management roles may develop JCDs based on their assigned functional roles and missions. A sponsor may also submit a JCD to the JROC for validation and approval prior to proceeding into the FSA, if the capabilities described impact on joint warfighting. The sponsor will coordinate with the appropriate FCB to determine if a JCD and JROC approval is required before proceeding or soliciting a FSA from a different sponsor.

g. Table A-2 represents a list of questions to ask about a completed FNA. It is not all encompassing, but being able to answer all of the questions indicates the analysis is probably sufficient to move forward to the FSA.

Table A-2: Functional Needs Analysis (FNA) Guide

Item	Requirement	Yes / No	Required Corrective Actions
1	Has the FNA considered the relevant doctrinal approaches to the military problems posed in the scenarios?		
2	Has the FNA identified which objectives have an unacceptable likelihood of being achieved in those scenarios?		
3	Has the FNA sufficiently defined and identified which capabilities and tasks limit the ability to produce the desired effects?		
4	Does the FNA use the standards developed in the FAA to characterize the severity of the capability gaps?		
5	Has the FNA produced and documented sufficient analytical results to justify the capability gaps it describes?		
6	Does the FNA prioritize the gaps using a framework derived from current strategic guidance?		
7	Does the FNA contain sufficient information to determine how the gaps were prioritized and the main factors driving the prioritization?		
8	Does the FNA make a compelling case for which gaps pose the most significant risk and must be resolved?		

6. Functional Solution Analysis. The sponsor of an FSA is normally a Service or agency, but it may be a combatant command or CSA when they have the authority to acquire the solutions. The sponsor leads the FSA with support from the combatant commands and oversight by the FCBs. It is a joint assessment of potential DOTMLPF and policy approaches to solving, or at least mitigating, one or more of the capability gaps identified in the FNA. The approaches identified should include the broadest possible range of joint possibilities for addressing the capability gaps. For each approach, the range of potential sustainment alternatives must be identified and evaluated as part of determining which approaches are viable. The results of the FSA will influence the future direction of integrated architectures and provide input to capability roadmaps.

a. Approaches proposed by an FSA must meet three criteria:

(1) they are strategically responsive and deliver approaches when and where they are needed;

(2) they are feasible with respect to policy, sustainment, personnel limitations, and technological risk; and

(3) they are realizable -- the Department of Defense could actually resource and implement the approaches within the timeframe required.

b. Scope of Approaches Considered. Too often, a solution analysis calls for an improved version of an existing system or force. JCIDS will not accept solutions analyses that prematurely narrow the approach focus and enforces the following order for considering approaches:

(1) changes to the existing doctrine, organization, and education;

(2) changes to policy guidance, including force posture;

(3) changes to personnel, including staffing, skill levels, and unit composition;

(4) product improvements to existing materiel and facilities;

(5) adopting interagency or foreign-supplied materiel approaches;

(6) potential international cooperative developments;

(7) new materiel starts; and

(8) for IT capabilities, on the basis of the capability gaps, potential approaches are identified, including (in order of priority): mission area process re-engineering as described by integrated DOTMLPF and policy changes that leverage existing capabilities; improvements to existing processes or systems; adoption of inter- and intra-agency approaches; and initiation of new programs.

c. Ideas for Non-Materiel Approaches

(1) Alternative Doctrinal Approaches and Alternative CONOPs. Investigating alternative CONOPs is a JCIDS FSA requirement. The FNA should only assess doctrinal CONOPs, but the FSA is free to assess alternatives, including potential doctrinal changes (which will likely result in organizational and educational changes) and those concepts described in the JOpsC. If the sponsor determines that the capability gap(s) can be partially addressed by non-materiel approaches, the sponsor will develop a joint DCR in addition to required CDDs or CPDs. If the sponsor determines that the

capability gap(s) can be completely addressed by a joint non-materiel approach, the sponsor will develop a joint DCR in lieu of completing the ICD.

(2) Policy and Personnel Alternatives. When considering policy alternatives, the FSA must rely on the FNA having exposed which policies are contributing to capability gaps and under which circumstances. While any military problem can be mitigated immediately by adopting a policy to not react to the problem, such suggestions rarely result in meaningful recommendations. A policy change, however, that allows new applications of existing capabilities or modifies force posture to increase deterrence is always of interest and should be considered in an FSA. Policy alternatives involving interagency and multinational issues must be carefully investigated in an FSA. Similarly, personnel alternatives can be overwhelming if not framed with some care. An FSA on a particular issue cannot be expected to redesign the personnel structure of a large part of the force, but it can suggest ways in which certain functions can be strengthened to eliminate gaps and point out mismatches between force availability and force needs. Finally, note that operating the programmed force under substantially different policy or personnel assumptions will generally require the development of an alternative CONOPs in the FSA to support those assumptions.

d. Ideas for Materiel Approaches. Materiel approaches run the gamut from new uses of possessed systems to research, development, and fielding programs on the scale of the Manhattan Project. The proposed approaches must comply with reference o. Again, the emphasis in JCIDS is to fully examine and assess existing materiel before recommending new starts. Regardless, the technical risk of any proposed approach should be examined using reference p.

e. Analysis of Materiel/non-Materiel Approaches (AMA). The AMA will determine which approach or combination of approaches may provide the desired capability or capabilities. As with the policy and personnel alternatives, approaches that use systems in radically new ways (or propose radically different types of systems) will likely require investigation of appropriate CONOPs for their use.

(1) Recommendations for Experimentation or Technology Development. Proposed approaches that would operate in a vastly different manner from the programmed force are likely to have a high degree of uncertainty associated with them. Such approaches are ideal candidates for joint experimentation, since that allows the approach to be explored in a controlled way before committing to it in the DOD program. FSAs will identify approaches with large uncertainty (with respect to either responsiveness, policy and technology feasibility, or realizability) that have potentially high payoffs and prioritize them for joint experimentation or advanced technology development. The prioritization mechanism should be similar, if not identical, to one used to

evaluate capability gaps in the FNA. Joint experimentation is an important risk mitigation step and allows the Department of Defense to investigate promising approaches without incurring significant program risk. The FSA is an appropriate vehicle to generate these recommendations. Advanced technology development can lead to breakthrough capabilities with the potential to transform warfighting; thus, the FSA should make these recommendations where appropriate. These recommendations will inform the JWSTP.

(2) Set of Approaches and FSA Integration. If a JCD has spawned multiple FSAs, the JCIDS process must have sufficient information from the FSAs to make reasonable decisions on the collection of approaches to support. The FSA must contain sufficient information on the approaches it considers and recommends to allow construction of a robust set of approaches. The FSA must directly link these approaches to the scenario conditions, task structures, and standards described in the FAA, and also directly link its candidate approaches to the capability gaps described in the FNA. Furthermore, the FSA must characterize the risks associated with the approaches, in terms of the three approach criteria listed above: responsiveness; policy, personnel, and technological feasibility; and realizability. A JCD creates multiple FSAs; the lead FCB will staff the approaches presented in the FSAs through the JCB and JROC as part of their portfolio management responsibilities.

(3) If a single FSA is considering a wide range of approaches covering a number of functional areas, the FSA should propose alternative portfolios of approaches. At the very least, the set of approaches should include a cost-neutral set (containing both new initiatives and offsets) as well as a cost-unconstrained (best possible) approach set. The set of approaches should also consider major uncertainties in future security environments, sustainment alternatives, and describe how the recommendations may change based on the uncertainties identified in the strategic guidance.

f. Table A-3 represents a list of questions to ask about a completed FSA. It is not all encompassing but being able to answer all of the questions indicates the analysis is probably sufficient to complete development of the ICD.

Table A-3: Functional Solutions Analysis (FSA) Guide

Item	Requirement	Yes / No	Required Corrective Actions
1	Does the FSA evaluate the spectrum of non-materiel approaches, particularly policy alternatives?		
2	Does the FSA investigate the full spectrum of materiel approaches, including use of interagency or foreign systems and new uses of existing systems?		
3	Does the FSA evaluate the range of sustainment alternatives for each approach?		
4	Does the FSA investigate at least one alternative CONOPs?		
5	Does the FSA present alternative CONOPs where necessary for its approach alternatives?		
6	Does the FSA provide estimates of the responsiveness, feasibility, and realizability of its proposed approaches?		
7	Does the FSA fully document how it assessed the effectiveness and risks of the approaches?		
8	In cases where an approach has high uncertainties but promising payoffs, does the FSA identify it as a candidate for joint experimentation or advanced technology development?		
9	If the FSA contains approach portfolios, does it propose a cost-neutral and a cost-unconstrained portfolio?		
10	If the FSA contains portfolio recommendations, does it show how those recommendations might change given strategic shifts described in the defense guidance?		

7. Joint Capability Technology Demonstration (JCTD), Advanced Concept Technology Demonstration (ACTD) Transition. The military utility assessment (MUA), which is completed at the end of the JCTD/ACTD, may be a suitable replacement for the required analysis used as the basis for ICD preparation. MUAs that do not contain the critical elements of information presented in the ICD (description of the capability gap(s); associated tasks, conditions and operational performance standards/metrics; and how the materiel and non-materiel approaches and analyses from the JCTD/ACTD addressed these factors) will be augmented with a final demonstration report to qualify the results as equivalent to an ICD. The MUA/final demonstration report will be used to support the development and subsequent JROC approval of the CDD or CPD. A CDD or CPD, as appropriate, will be developed for the JCTD/ACTD to transition into a program of record.

8. Prototypes. Results of prototype projects (e.g., USJFCOM prototypes) and operationally validated quick reaction technology projects intended for direct transition to fielded capabilities may also be eligible for consideration as joint solutions. This consideration shall be based on mission need validation and MUA processes as applied to JCTDs/ACTDs.

9. Joint IED Defeat Initiative Transition. The Joint IED Defeat Transition Packet, which is complete after the Joint IED Defeat Organization (JIEDDO) (reference q) validates an initiative, may be the appropriate replacement for the required analysis used as the bases for ICD preparation. The Transition Packet will be used as the CDD/CPD equivalent document for subsequent JROC approval and transition to a program of record.

ENCLOSURE B

PERFORMANCE ATTRIBUTES AND KEY PERFORMANCE PARAMETERS

1. Performance Attributes and Key Performance Parameters. The CDD and CPD state the operational and sustainment-related performance attributes of a system(s) that provides the capabilities required by the warfighter -- attributes so significant they must be verified by testing and evaluation or analysis. KPPs are those attributes or characteristics of a system that are considered critical or essential to the development of an effective military capability and those attributes that make a significant contribution to the characteristics of the future joint force as defined in the CCJO. The CDD and CPD identify the attributes that contribute most significantly to the desired operational capability in threshold-objective format. Whenever possible, attributes should be stated in terms that reflect the range of military operations that the capabilities must support and the joint operating environment intended for the system (family of systems (FoS) or system of systems (SoS)). There are compatibility and interoperability attributes (e.g., databases, fuel, transportability, ammunition) that might need to be identified for a capability to ensure its effectiveness. These statements will guide the acquisition community in making tradeoff decisions between the threshold and objective values of the stated attributes. Because operational testing will assess the ability of the system(s) to meet the production threshold values as defined by the KPPs, KSAs, and other performance attributes, these attributes must be testable.

a. Each attribute will be supported by an operationally oriented analysis that takes into account technology maturity, fiscal constraints, and the timeframe the capability is required before determining threshold and objective values. Given these constraints, an evolutionary acquisition approach may be necessary, delivering the capability in achievable increments that allow management of the risks, ensuring delivery of the complete capability within the timeframe required. Below the threshold value, the military utility of the system(s) becomes questionable. In an evolutionary acquisition, it is expected that threshold values will generally improve between increments. Different attributes may come into play as follow-on increments deliver additional capability. An attribute may apply to more than one increment. The threshold and objective values of an attribute may differ in each increment. DOD components will, at a minimum, budget to achieve all stated thresholds.

b. The threshold value for an attribute is the minimum acceptable value considered achievable within the available cost, schedule, and technology at low-to-moderate risk. Performance below the threshold value is not operationally effective or suitable. The objective value for an attribute is the

desired operational goal achievable but at higher risk in cost, schedule, and technology. Performance above the objective does not justify additional expense. The difference between threshold and objective values sets the trade space for meeting the thresholds of multiple KPPs. Advances in technology or changes in JOpsC may result in changes to threshold and objective values in future increments.

c. The attributes and their supporting rationale should reflect analytical insights identified by the CBA used to develop an ICD. The attributes should be directly related to the measures of effectiveness related to the capability as defined in the ICD. As a minimum, supporting analyses must include: the AoA for potential ACAT I programs and other programs as directed by the milestone decision authority (MDA); the cost-schedule-performance tradeoffs analysis; the capability cost tradeoffs analysis; the results of experimentation; testing and evaluation; sustainment, system training, and energy efficiency analysis; lessons learned during the system development and demonstration (SDD) phase; life-cycle/total ownership cost analysis; and user feedback on fielded production increments.

d. KPPs are those system attributes considered most critical or essential for an effective military capability. The CDD and the CPD must contain sufficient KPPs to capture the minimum operational effectiveness, suitability, and sustainment attributes needed to achieve the overall desired capabilities for the system (or systems if the CDD/CPD describes an SoS) during the applicable increment. Failure to meet a CDD or CPD KPP threshold may result in a reevaluation or reassessment of the program or a modification of the production increments.

e. KSAs are those system attributes considered most critical or essential for an effective military capability but not selected as a KPP. KSAs provide decision makers with an additional level of capability prioritization below the KPP but with senior sponsor leadership control (generally 4-star level, Defense agency commander, or Principal Staff Assistant). In the case of the mandated Sustainment KPP (Materiel Availability), the supporting Materiel Reliability and Ownership Cost KSAs require any changes to be documented in the subsequent update to the acquisition program baseline. KSAs do not apply to the net-ready KPP (NR-KPP).

2. Required KPPs

a. Mandatory KPPs for Force Protection and Survivability. All staffed systems and systems designed to enhance personnel survivability will identify KPPs for force protection and survivability when those systems may be employed in an asymmetric threat environment. The Protection FCB, in coordination with the lead FCB, will assess these KPPs and their applicability for JROC Interest CDDs and CPDs and make a recommendation to the JROC

on validation. The sponsoring component will validate the KPPs for non-JROC Interest CDDs and CPDs. A single KPP can be developed provided it complies with the congressional direction pertaining to force protection and survivability.

(1) Survivability KPP. Survivability attributes are those that contribute to the survivability of a manned system. This includes attributes such as speed, maneuverability, detectability, and countermeasures that reduce a system's likelihood of being engaged by hostile fire, as well as attributes such as armor and redundancy or critical components that reduce the system's vulnerability if it is hit by hostile fire.

(2) Force Protection KPP. Force protection attributes are those that contribute to the protection of personnel by preventing or mitigating hostile actions against friendly personnel, military and civilian. This may include the same attributes as those that contribute to survivability, but the emphasis is on protecting the system operator or other personnel rather than protecting the system itself. Attributes that are offensive in nature and primarily intended to defeat enemy forces before they can engage friendly forces are not considered force protection attributes. Attributes that protect against accidents, weather, natural environmental hazards, or disease (except when related to a biological attack) are also not part of force protection.

(3) Exemptions. Document sponsors who determine that the survivability and/or force protection KPPs do not apply will include rationale in the CDD/CPD explaining why they are not appropriate. The JROC must concur in this recommendation for JROC Interest documents.

b. Sustainment KPP. A Sustainment KPP (Materiel Availability) and two mandatory supporting KSAs (Materiel Reliability and Ownership Cost) will be developed for all JROC Interest programs involving materiel solutions. For non-JROC Interest programs, the sponsor will determine the applicability of this KPP. During the CBA, the relevant sustainment criteria and alternatives will be evaluated to provide the analytical foundation for the establishment of the sustainment KPP and KSAs.

(1) Mandatory KPP. Materiel Availability is a measure of the percentage of the total inventory of a system operationally capable (ready for tasking) of performing an assigned mission at a given time, based on materiel condition. This can be expressed mathematically as (number of operational end items/total population). Materiel Availability also indicates the percentage of time that a system is operationally capable of performing an assigned mission and can be expressed as (uptime/(uptime + downtime)). Determining the optimum value for Materiel Availability requires a comprehensive analysis of the system and its planned use, including the planned operating environment, operating tempo, reliability alternatives, maintenance approaches, and supply chain solutions. Materiel Availability is primarily determined by system

downtime, both planned and unplanned, requiring the early examination and determination of critical factors such as the total number of end items to be fielded and the major categories and drivers of system downtime. The Materiel Availability KPP must address the total population of end items planned for operational use, including those temporarily in a non-operational status once placed into service (such as for depot-level maintenance). The total life-cycle timeframe, from placement into operational service through the planned end of service life, must be included.

(a) Mandatory KSA (Materiel Reliability): Materiel Reliability is a measure of the probability that the system will perform without failure over a specific interval. Reliability must be sufficient to support the warfighting capability needed. Materiel Reliability is generally expressed in terms of a mean time between failures (MTBF), and once operational can be measured by dividing actual operating hours by the number of failures experienced during a specific interval. Reliability may initially be expressed as a desired failure-free interval that can be converted to MTBF for use as a KSA (e.g., 95 percent probability of completing a 12-hour mission free from mission-degrading failure; 90 percent probability of completing 5 sorties without failure). Specific criteria for defining operating hours and failure criteria must be provided together with the KSA. Single-shot systems and systems for which other units of measure are appropriate must provide supporting analysis and rationale.

(b) Mandatory KSA (Ownership Cost): Ownership Cost provides balance to the sustainment solution by ensuring that the operations and support (O&S) costs associated with materiel readiness are considered in making decisions. For consistency and to capitalize on existing efforts in this area, the Cost Analysis Improvement Group O&S Cost Estimating Structure will be used in support of this KSA. Only the following cost elements are required: 2.0 Unit Operations (2.1.1 (only) Energy (fuel, petroleum, oil, lubricants, electricity)); 3.0 Maintenance (All); 4.0 Sustaining Support (All except 4.1, System Specific Training); 5.0 Continuing System Improvements (All). Fuel costs will be based on the fully burdened cost of fuel. Costs are to be included regardless of funding source. The KSA value should cover the planned lifecycle timeframe, consistent with the timeframe used in the Materiel Availability KPP. Sources of reference data, cost models, parametric cost estimating relationships, and other estimating techniques or tools must be identified in supporting analysis. Programs must plan for maintaining the traceability of costs incurred to estimates and must plan for testing and evaluation. The planned approach to monitoring, collecting, and validating operating and support cost data to supporting the KSA must be provided.

(2) Exemptions. Document sponsors who determine the materiel availability KPP does not apply will include rationale in the CDD/CPD explaining why it is not appropriate. Joint Staff/J-4 must concur in this recommendation for JROC Interest documents.

c. Net-Ready KPP (NR-KPP). A NR-KPP will be developed for all IT and NSS used to enter, process, store, display, or transmit DOD information, regardless of classification or sensitivity. Exceptions are those systems that do not communicate with external ones, including IT systems in accordance with references r, s, and t.

(1) IT and NSS interoperability is defined in reference r as the ability of systems, units, or forces to provide data, information, materiel, and services to and accept the same from other systems, units, or forces and to use the data, information, materiel, and services so exchanged to enable them to operate effectively together. IT and NSS interoperability includes the technical exchange of information and the end-to-end operational effectiveness of that exchange as required for mission accomplishment. An NR-KPP is based on the information exchange of the proposed system(s) and is derived from integrated architectures, whenever possible, as defined in references r and u.

(2) The NR-KPP should reflect the information needs of the capability under consideration and the needs of appropriate supported systems. It should cover all communication, computing, and electromagnetic spectrum (reference v) requirements involving the exchange of products and services between producer, sender, receiver, and consumer for the successful completion of the warfighter mission, business process, or transaction. It will also identify all applicable standards the system will use to make data visible, accessible, and understandable to other information producers and consumers on the Global Information Grid (GIG). Embedded training will be considered as the first alternative for operators and maintainers to optimize use of the operational systems and interface with the distributed networks. Systems will be able to operate and train in peacetime within national and regional radio spectrum regulations. These products and services include any geospatial intelligence and environmental support the system(s) needs to meet operational capabilities. The NR-KPP identified in CDDs and CPDs will be used in the information support plan (ISP) (see references s and t) to identify support required from outside the program.

(3) Information assurance (IA) capabilities must be developed and integrated with capabilities for interoperability for any system considered an asset of the GIG. Reference w provides the guiding policy for the GIG and systems that use it. IA is defined as the information operation that protects and defends information and information systems by ensuring their availability, integrity, authentication, confidentiality, and non-repudiation. It includes restoration through protection, detection, and reaction capabilities. IA capabilities apply to all DOD systems that are used to enter, process, store, display, or transmit DOD information, regardless of classification or sensitivity, except those that do not communicate with external systems.

(4) Document sponsors who determine the NR-KPP does not apply will include rationale in the CDD/CPD explaining why it is not appropriate. Joint Staff/J-6 must concur in this determination for JROC Interest and Joint Integration documents.

d. Selectively Applied KPPs. The JROC has defined two KPPs to be selectively applied to programs, system training, and energy efficiency. The sponsor will perform an analysis on the use of these parameters as KPPs. If the analysis determines that they should not be KPPs, a summary of the analysis will be provided.

(1) System Training KPP. Ensure system training is addressed in the AoA and supporting analysis for subsequent acquisition phases and ensure projected training requirements and associated costs are appropriately addressed across the program life cycle.

(2) Energy Efficiency KPP. Include fuel efficiency considerations for fleet purchases and operational plans consistent with mission accomplishment. Life-cycle cost analysis will include the fully burdened cost of fuel during the AoA and subsequent analyses and acquisition program design trades. The fully burdened cost of fuel includes the price of the fuel delivery chain (to include force protection requirements).

e. KPPs Traceable to the CCJO. All systems will have KPPs that can be traced back through the ICD to those characteristics of the future joint force as defined in the CCJO to which the proposed system makes a significant contribution. These attributes will be designated as KPPs and have threshold and objective values defining the system's contribution to those key characteristics of the joint force. Guidelines for identifying the CCJO-derived KPPs are:

(1) Based on the primary mission of the system, does it contribute to one or more of the CCJO characteristics of the future joint force? For example, a bomber could contribute to multiple key characteristics: expeditionary, adaptable, and enduring/persistent; and an unmanned aerial vehicle could contribute to knowledge empowered, networked, and enduring/persistent.

(2) Does the system have other attributes that contribute significantly to any of the CCJO characteristics of the future joint force? For example, the tactical data link on a fighter may contribute to the overall networked characteristic in addition to the primary mission of the fighter.

(3) If the answer is yes to either of the above, designate at least one (if not more) attributes as a KPP for each relevant characteristic. It is not necessary to designate as a KPP every attribute associated with a particular characteristic, only those most essential to the capability. In the case of the

bomber, while it may have attributes related to range, payload, etc., range may be the one most essential to the expeditionary characteristic.

3. Development of KPPs

a. The following questions should be answered in the affirmative before a performance attribute is selected as a KPP:

(1) Is the attribute a necessary component of the mandatory KPPs (statutory, sustainment, or net-ready) or is it essential for providing the required capabilities?

(2) Does it contribute to significant improvement in warfighting capabilities, operational effectiveness, and/or operational suitability?

(3) Is it achievable and affordable (total life-cycle costs)?

(4) Is it measurable and testable?

(5) Are the definition of the attribute and the recommended threshold and objective values reflective of fiscal constraints, applicable technology maturity, timeframe the capability is required, and supported by analysis?

(6) Is the sponsor willing to consider restructuring the program if the attribute is not met?

(7) Did the analysis determine the need for the system training KPP. If not, did the analysis provide quantifiable justification for not having system training as a KPP?

(8) Did the life-cycle analysis determine the applicability of the energy efficiency KPP (utilizing the fully burdened cost of fuel)? If not, ensure the analysis is available for review.

b. A KPP will normally be a rollup of a number of supporting attributes or KSAs that may be traded off to deliver the overall performance required. The following is one methodology for developing KPPs:

(1) Step 1: List required capabilities for each mission or function as described in the proposed CDD or CPD. This review should include all requirements that the system described in the CDD/CPD is projected to meet, including those related to other systems in an FoS or SoS context. It shall also include all relevant performance metrics identified in ICDs for which the CDD/CPD is providing a capability.

(2) Step 2: Prioritize these capabilities.

(3) Step 3: Review for applicability the list of attributes associated with each of the CCJO characteristics of the future joint force in Appendix A to this Enclosure. Compile a list of potential attributes using Appendix A as a starting point and include any other performance attributes that are essential to the delivery of the capability. Cross walk this list with the capabilities in Step 2 to assist in identifying potential performance attributes to be considered for designation as KPPs.

(4) Step 4: For each mission or function, build at least one measurable performance attribute using the list from Step 3 as a starting point.

(5) Step 5: Determine the attributes that are most critical or essential to the system(s) and designate them as KPPs. (Note: A KPP need not be created for all missions and functions for the system(s). In contrast, certain missions and functions may require two or more KPPs.)

(6) Step 6: Document how the KPPs are responsive to the capability performance attributes identified in the ICDs.

c. Threshold and objective values of an attribute may change between the CDD and the CPD. The CDD attribute values are used to guide the acquisition community during SDD (see reference c for acquisition phases for DOD space programs). Threshold values should be based on what is achievable through the current state of technology as a minimum. The objective values may be defined based on a goal for the end-state of the system. During SDD, tradeoffs are made between the threshold and objective values to optimize performance, given the available technology for the increment and the competing demands introduced by combining subsystems into the overall system. A deeper review of trade-offs at and around threshold values may be beneficial to explore incremental return on investment where particular thresholds are insensitive to small deviation at great advantage in cost, performance, and schedule reviews. After the design readiness review, these tradeoff decisions are essentially completed and a more precise determination of acceptable performance can be stated in the CPD.

(1) Figure B-1 (a) shows an attribute (A) of a system with threshold and objective values (1 and 10, respectively) determined during technology development and presented in the CDD. During SDD, optimum performance values may be developed for each attribute (or some attributes) on the basis of cost, performance, or other considerations, as shown in Figure B-1 (b).

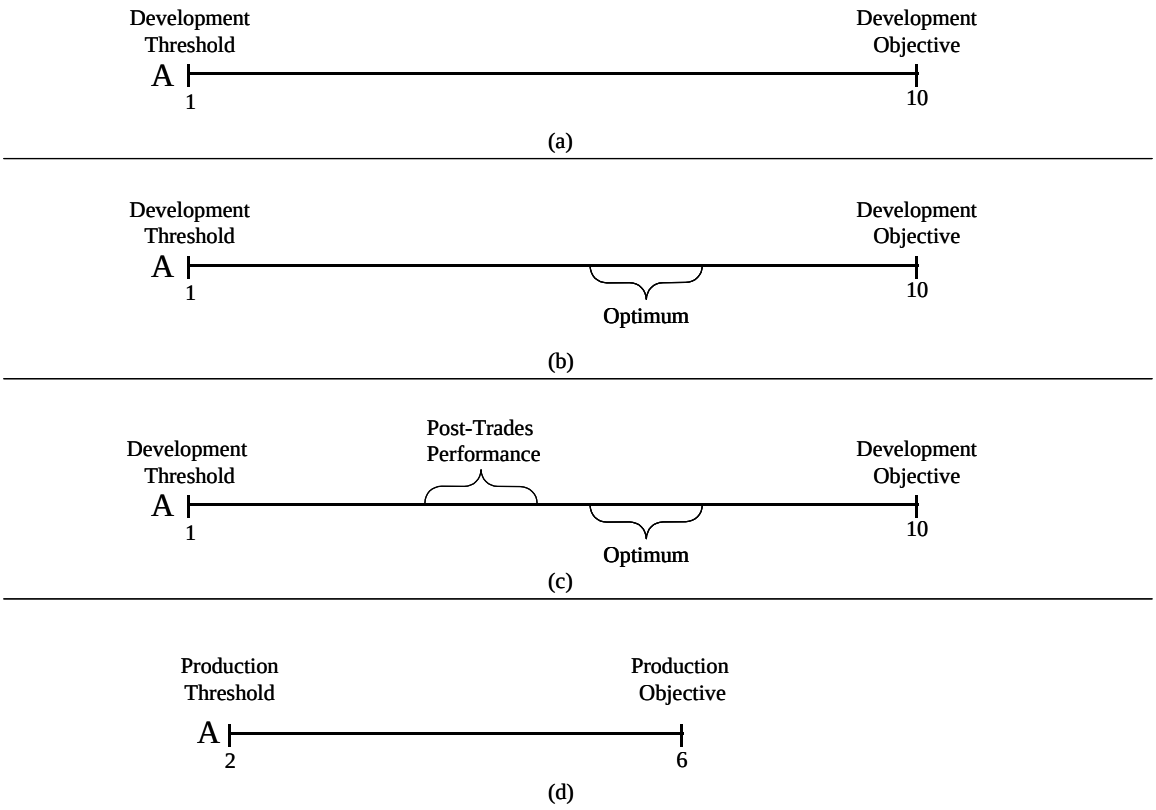

Figure B-1 (a), (b), (c), and (d). CDD and CPD Attributes

(2) Further design tradeoffs among the collective attributes may necessitate settling for design performance values different from the optimum values for the individual attributes. The design performance values may be higher or lower than the optimum values. Figure B-1 (c) shows an example in which optimum performance was traded off because of other considerations, resulting in reduced performance within attribute A.

(3) The production threshold and objective values specified for the attribute in the CPD will be a refined version of the development threshold and objective values documented in the CDD. Figure B-1 (d) shows an example of the revised performance attributes that would be included in the CPD. Each production threshold value should be determined on the basis of manufacturing risk and risk imposed by other related attributes. KPP and non-KPP threshold values in the CPD should be equal to or better than the corresponding CDD threshold values. There may be cases, however, where CDD KPP and/or non-KPP threshold values are reduced in a CPD. When this occurs, the following questions must be answered in the CPD:

(a) Will the capability still provide sufficient military utility?

(b) If the new capability will replace a fielded capability, will it still provide more overall military utility than the fielded capability?

(c) Is this capability still a good way to close the capability gap or should another materiel or non-materiel alternative approach be pursued?

(d) Is the reduced capability worth the costs incurred to-date and any additional investments required?

(4) For an early increment in an evolutionary acquisition, the production objective value for the increment could be less than the development objective value.

4. Changing KPPs. There may be circumstances where it is necessary to change the previously approved KPPs. These include cost, technology, production, development, or other issues that prevent meeting the threshold of the KPP. For KPPs in JROC Interest documents, where the change is not substantive in terms of the delivered capability, a streamlined process has been developed for rapid approval. The sponsor may request to bypass the JCIDS staffing and proceed directly to the JROC for validation of the change. The process is as follows:

a. The sponsor will submit the document to the Knowledge Management/ Decision Support (KM/DS) tool as an FCB draft document, and identify in the "purpose" section that this is a KPP update only and request direct consideration by the FCB without staffing.

b. The Lead FCB and the Joint Staff/J-8 Capabilities and Acquisition Division (CAD) action officer will evaluate the change and determine if staffing is required.

c. If additional staffing is required, the change will go through the normal process.

d. If the update is to the NR-KPP only, the document will be staffed to Joint Staff/J-6 for recertification via KM/DS.

e. If additional staffing is not required, the lead FCB will work with the sponsor to prepare a briefing for the JROC to obtain approval.

f. The lead FCB will schedule the briefing on the JCB and JROC calendars as required.

APPENDIX A TO ENCLOSURE B

ATTRIBUTES FOR POTENTIAL KEY PERFORMANCE PARAMETER DESIGNATION

1. The following information is provided to assist in identifying potential performance attributes for a system based on the contribution to the characteristics of the future joint force as identified in the CCJO. For each characteristic, a definition from the CCJO is provided as well as a list of potential performance attributes. The list of potential KPP attributes represent an iterative consolidation of more than 400 KPPs historically used across the ACAT I programs, and serves as a useful aid in quickly generating potential KPP options. These should be used as part of the process delineated in Enclosure B.

a. Knowledge Empowered -- Better decisions made faster; understanding environment, adversaries, and cultures; enhanced collaborative decision-making.

(1) Coded message error probability

(2) Contact – detect/discriminate/classify type/identify friendly

(3) Coverage/focus areas

(4) Frequency range

(5) Initial report accuracy

(6) Onboard platform range of surveillance systems/sensors/ communications

(7) Sensor collection performance parameters

(8) Tracking -- number/altitudes/depths/velocities

(9) Training

(10) Transmitted data accuracy

(11) Geophysics/atmospherics

(a) Atmospheric vertical moisture profile

(b) Global sea surface winds

(c) Atmospheric vertical temperature profile

(d) Imagery

(e) Sea surface temperature horizontal resolution

(f) Soil moisture (surface) sensing depth

b. Networked -- connected and synchronized in time and purpose.

(1) Access and control

(2) Communication throughput while mobile/non-mobile

(3) Interoperable/net ready

(4) Multi-channel routing/retransmission/operation on the same net

(5) Networked with specific sensors/units

(6) Paired time slot relay capability

c. Interoperable -- Able to share and exchange knowledge and services; allows the joint force to act in an integrated and interdependent way; systems, capabilities, and organizations working in harmony.

(1) Air vehicles -- land-takeoff distance/ship launch-recover parameters/deck spot factor

(2) Compatible on aircraft/aircraft carriers/ships

(3) Physically interoperable with other platforms/systems/subsystems/ warheads/launchers

(4) Water vehicles -- land-launch spots/compatibility with other water vehicles

(5) Waveform compatibility

(6) Weapon -- launch envelope/weight/number on launchers

(7) Weight/volume to fit expected carrying platforms

(8) Works with legacy systems

d. Expeditionary -- organized, postured, and capable of rapid and simultaneous deployment, employment, and sustainment; converges mission-tailored capabilities at desired point of action; capable of transitioning to sustained operations.

(1) Ability to transport aircraft/vehicles/cargo/fuel/passengers/troops/crew

(2) Lift capacity

(3) Logistics footprint

(4) Platform transportability

(5) Self-deployment capability

e. Adaptable/Tailorable -- can handle disparate missions; scalable in applying appropriate mass and weight.

(1) Air vehicles -- vertical-short take-off and landing/aerial refueling/classes of airspace/altitude (max-min-on station-intercept)

(2) Ground vehicle -- fording

(3) Information -- ability to create, store, modify, or reconfigure

(4) Internal growth

(5) Platform -- weapons systems/launchers/firing-storing capacity

(6) Platform range -- maximum/minimum/combat-mission radius

(7) Types of broadcast supported/scalability

(8) Water vehicles -- draft/weight/stability/electrical generating capacity/test depth

(9) Weapon -- off axis launch angle, off bore sight angle, all weather, day-night

f. Enduring/Persistent -- depth and capacity to sustain operations over time.

(1) Operational availability (down-time versus up-time)

(2) Platform -- weapons systems/launchers/firing-storage capacity

(3) Sustained operations

(4) Time

(5) Various reliability measures

g. Precise -- exact application of force to achieve greater success at less risk.

(1) Accurate engagement decision/engagement sequence

(2) Intercept/circular error probable

(3) Threat challenges -- countermeasures/radar cross section-size/ multiple numbers

h. Fast -- speed of action across domains.

(1) Acceptable engagement sequence time

(2) Cargo transfer rate

(3) Data -- transfer-distribution rate/update rate

(4) Mission response time

(5) Platform speed -- maximum/minimum/cruise/flank/sustained/ acceleration/land-sea-air

(6) Power-up/fire/re-fire/weapon launch rate

(7) Sortie rate -- generated/sustained/surge

(8) Speed of initial report

i. Resilient -- able to protect and sustain capabilities from adversaries or adverse conditions; able to withstand pressure or absorb punishment.

(1) Ability to withstand hit/blast/flood/shock

(2) Assured communications to national, missile defense, and nuclear forces

(3) Covertness -- radiated noise/active target strength/radar cross section/electro magnetic quieting/radio frequency signature

(4) Information assurance

(5) Jam resistance

(6) Tactics, techniques, and procedures/countermeasures

j. Agile -- move quickly and seamlessly; timeliness.

(1) Air vehicle -- climb rate-gradient/G-load capability

(2) Automated mission planning

(3) Data variable rate capability

(4) Ground vehicles -- fording

(5) Platform specified timelines

(6) Weapon in-flight re-targeting

k. Lethal -- Ability to destroy adversary and/or systems in all conditions.

(1) Detect to engage scenarios

(2) Expected fractional damage

(3) Jamming capability

(4) Probability of kill/mission kill

(5) Weapon range

(INTENTIONALLY BLANK)

ENCLOSURE C

JCIDS STAFFING PROCESS

1. Process Overview

a. The process of obtaining validation and approval of JCIDS documents begins with the submission of a document to the KM/DS tool (see Figure C-1). Staffing continues until the document is validated and approved. The KM/DS tool will be used by DOD components to submit documents and comments for O-6 and flag reviews, search for historical information, and track the status of documents. The KM/DS tool may be found on https://jrockmds1.js.smil.mil/guestjrcz/gbase.guesthome.

b. Services and other organizations conducting JCIDS analyses may generate ideas, the JOpsC, and CONOPs leading to JCDs, ICDs, CDDs, CPDs and joint DCRs. JCIDS initiatives may also be generated as a result of analyses directed or conducted by an FCB. As the initiative develops into proposed DOTMLPF or materiel approaches to provide desired capabilities, an FCB may request that a Service or Defense agency become the sponsor for the initiative. Further proposal development would then become the responsibility of the sponsor.

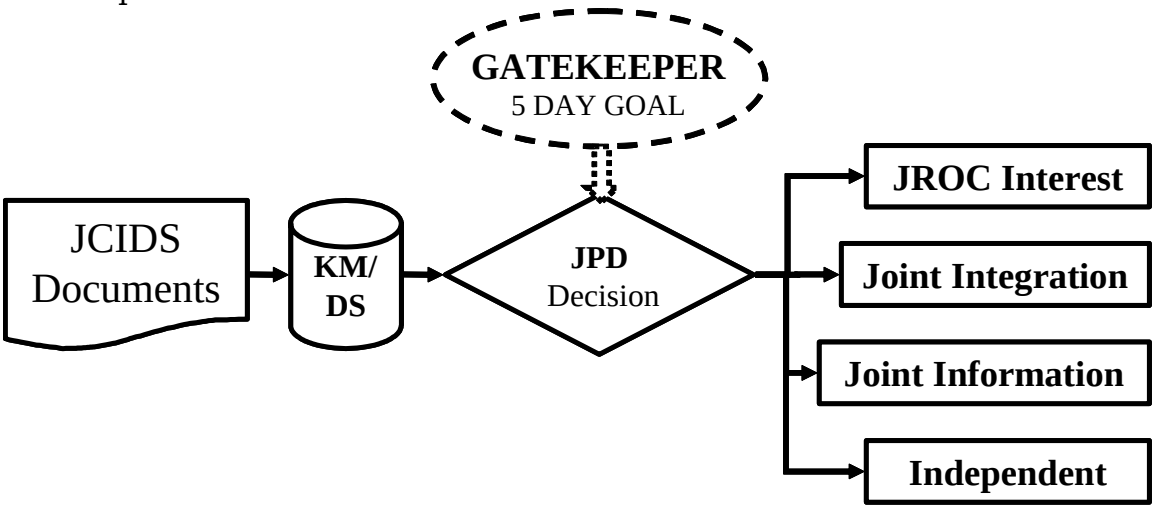

Figure C-1. Gatekeeping Process

(1) Document Submission. All JCIDS documents (JCDs, ICDs, CDDs, CPDs and joint DCRs) will be entered in the KM/DS tool by the sponsor. The document will be subjected to DOD component staffing and coordination. The document will be forwarded through KM/DS, identifying the document, date, any schedule drivers, classification, and working-level points of contact. An executive summary of the analysis supporting the development of the

document and the specific analysis used in the determination of CDD and CPD KPPs also will be provided with the draft document. All documents will be signed out by the sponsoring organization at the 3-star level (or equivalent capability oversight council) as a minimum prior to presentation to the JROC through the JCB for validation and approval. All documents undergoing the review process are considered draft until after validation and/or approval by the designated validation authority.

(a) Format. The submission will be an electronic copy in Microsoft Word version 6.0 or higher.

(b) Documents classified SECRET and below transmitted electronically and retained as a permanent JCIDS record must be accurately and completely marked in accordance with reference x.

(c) Documents for highly sensitive classified programs will be transmitted in a hard copy form to the Joint Staff/J-8 CAD, in accordance with appropriate classification guidelines and handling procedures. For TOP SECRET and SCI documents, a placeholder record will be placed into KM/DS with instructions on document location. Special access documents will not be recorded in KM/DS. Approved documents will be retained in accordance with storage and handling procedures for each program.

(2) Submission of the document to the KM/DS tool will trigger the gatekeeper process to determine whether the document has joint implications or is component-unique.

c. The Gatekeeper. The Vice Director, Joint Staff/J-8, is the Gatekeeper of the JCIDS process. With the assistance of FCB working group leads, Joint Staff/J-8 CAD, and J-6I Integration and Information Assurance Division, the Gatekeeper will evaluate all JCIDS documents.

(1) JCIDS documents will be submitted for Gatekeeper review to determine whether the proposal affects the joint force. The Gatekeeper will review each document upon initial submission, regardless of ACAT, previous delegation decisions, or previous joint potential designator (JPD) decisions. This designation will not be revisited for subsequent submission of the same document unless a recommendation for change is made by the lead FCB or the document sponsor makes a request for reassessment. The Gatekeeper will use the JPD assigned to a predecessor document in the determination of the new JPD.

(2) Based on the content of the submission, the Gatekeeper will assign a JPD of “JROC Interest,” “Joint Integration,” “Joint Information” or “Independent” to the JCIDS document. Per reference e, all weapons and munitions shall be designated as JROC Interest or Joint Integration, unless justification is provided to preclude those designations. The Gatekeeper will

then assign it to a lead FCB for further assessment and may designate other FCBs to support the process.

(a) The JROC Interest designation will apply to all ACAT I/IA programs and ACAT II and below programs where these capabilities have a significant impact on joint warfighting or have a potentially impact across Services or interoperability in allied and coalition operations. All JCDs and joint DCRs will be designated JROC Interest. This designation may apply to intelligence capabilities that support DOD and national intelligence requirements. These documents will receive all applicable certifications, including a weapon safety endorsement when appropriate, and be staffed through the JROC for validation and approval. An exception may be made for ACAT IAM programs without significant impact on joint warfighting (i.e., business oriented systems). The Gatekeeper may designate these programs either as Joint Integration, Joint Information, or Independent.

(b) The Joint Integration designation will apply to ACAT II and below programs in which the capabilities and/or systems associated with the document do not significantly affect the joint force and an expanded review is not required. Staffing is required for applicable certifications (IT and NSS interoperability and supportability (references r, s, and t) and/or intelligence), and for a weapon safety endorsement, as appropriate. Once the required certifications and weapon safety endorsement are completed, the document may be reviewed by the FCB. Joint Integration documents are validated and approved by the sponsoring component.

(c) The Joint Information designation will apply to ACAT II and below programs that have interest or potential impact across Services or agencies but do not have significant impact on the joint force and do not reach the threshold for JROC Interest. No certifications or endorsements are required. Once designated Joint Information, staffing is required for informational purposes only and the FCB may review the proposal. Joint Information documents are validated and approved by the sponsoring component.

(d) The Independent designation will apply to ACAT II and below programs in which the capabilities and/or systems associated with the document do not significantly affect the joint force, an expanded review is not required, and no certifications or endorsements are required. Once designated Independent, the FCB may review the document. Independent documents are validated and approved by the sponsoring component.

(3) Using the KM/DS tool, the Joint Staff/J-8 will maintain a database of JCIDS documents processed through the JCIDS process. The database will include the JPD, the FCBs having equity in the proposal, and the lead FCB for the proposal. The database will help the Gatekeeper ensure consistency of staffing as JCIDS proposals progress through the JCIDS process.

(4) Once the JPD has been assigned, the document will move into the staffing and approval process. Table C-1 lists the organizations that will typically be asked to staff and comment on any JCIDS document based on the assigned JPD. Acquisition community review will be included in the staffing of any JROC Interest or Joint Integration proposal.

Table C-1. Staffing Matrix

Office	JROC Interest	Joint Integration	Joint Information	Independent
Army	X	X	X	S
Navy	X	X	X	S
Air Force	X	X	X	S
Marine Corps	X	X	X	S
Joint Staff	X/C/E	C/E	X	
FCB Working Groups	L/S	L/S	L/S	L/S
Combatant Commanders	X	X	X	S
Other DOD Components	X	X	X	X
USD(AT&L)	X	X	X	
USD(I)	X	X	X	
USecAF (DOD EA for Space)	X	X	X	S
ASD(NII)/DOD CIO	X	X	X	
USD(P&R)	X	X	X	
USD(C)	X	X	X	
DOT&E	X	X	X	
Director, PA&E	X	X	X	
DIA	X	X	X	
DISA	X	X	X	S
NGA	X	X	X	S
NSA	X	X	X	S
NRO	X	X	X	S
MRB	X	X	X	

L/S = lead/supporting FCB
S = Sponsor staffing only
X = Required staffing
C = Certification
E = Weapon Safety Endorsement

2. Certifications and Weapon Safety Endorsement. Applicable certifications and the weapon safety endorsement will be processed as part of the staffing

process for each JCIDS document. If a certification/endorsement authority determines the content is insufficient to support a required certification/ endorsement, it is the sponsor's responsibility to resolve the issue with the certification/endorsement authority. If resolution cannot be achieved, the sponsor may request review of the issue by higher authority as described below.

a. Threat Validation and Intelligence Certification – (Joint Staff/J-2)

(1) Threat Validation. For all JROC Interest and Joint Integration JCDs, ICDs, CDDs, and CPDs, the DIA will provide validation of threat information appropriate to the proposal through the intelligence certification process in accordance with reference y. DOD components may validate intelligence information for programs designated as Joint Information or Independent proposals using DIA-validated threat data and/or data contained in DOD Service Intelligence Production Program products and data.

(2) Intelligence Certification. Joint Staff/J-2 will provide intelligence certification in accordance with reference y as part of the JCIDS staffing of JCDs, ICDs, CDDs, and CPDs, regardless of ACAT level, unless a waiver has been granted by Joint Staff/J-2. It will assess intelligence support needs for completeness, supportability, and impact on joint intelligence strategy, policy, and architectural planning as outlined in reference y. The Joint Staff/J-2 certification will also evaluate intelligence-related information systems with respect to security and intelligence interoperability standards.

(3) Unresolved Intelligence Issues. Unresolved intelligence issues will be brought to the attention of the appropriate FCB(s) in accordance with reference y procedures.

(4) Information Support Plans. Joint Staff/J-2 will assess the intelligence needs, deficiencies, and solutions documented in the ISPs in accordance with references s, t, and y.

b. IT and NSS Interoperability and Supportability Requirements Certification – (Joint Staff/J-6) The J-6 will:

(1) Certify all CDDs and CPDs designated as JROC Interest or Joint Integration for conformance with joint IT and NSS policy.

(2) Certify compliance with integrated architectures, interoperability standards, and net-centric data sharing in accordance with references r, s, t, and z.

(3) Review and comment on the IT and NSS NR-KPP.

(4) Coordinate IT and NSS issues concerning JCIDS documents with the appropriate agencies, in accordance with reference t and as directed by references r and s.

(5) Certify the IT and NSS interoperability and supportability requirements in the CDD and CPD in accordance with reference t.

(6) Forward the IT and NSS interoperability and supportability certification to the FCB (for programs designated as JROC Interest) or to the sponsoring DOD component (for other programs).

(7) Forward unresolved interoperability issues to the Military Communications Electronics Board (MCEB) for resolution. The MCEB will ensure that issues resulting from unresolved interoperability assessments are delivered to the FCB, reviewed by the DOD Chief Information Officer (CIO), and presented to the JROC for resolution, regardless of the document's JPD.

c. Weapon Safety Endorsement

(1) The J-8/DDFP will provide a weapon safety endorsement coordinated through the Force Protection FCB as part of the JCIDS staffing of JCDs, ICDs, CDDs, CPDs, and DCRs regardless of ACAT level for weapons, as defined herein. A weapon safety endorsement is the means for documenting the extent to which weapon capabilities documents provide for safe integration into joint warfighting environments. Endorsement recommendations will be prepared by the Joint Weapon Safety Technical Advisory Panel (JWSTAP) and submitted to the J-8/DDFP for appropriate staffing and coordination with the FP FCB.

(2) The endorsement will indicate that required joint warfighting environment attributes and performance parameters, from a weapon safety perspective, are judged to be adequately prescribed in the JCD, ICD, CDD, CPD, or DCR. The endorsement may also convey identified limitations in the prescribed attributes or performance parameters that are deemed acceptable from a weapon safety perspective, yet foreseen as potential military utility hindrances or joint operation limitations. If the weapon safety endorsement identifies restrictions/limitations, the sponsor will coordinate with the FP FCB for resolution or acceptance of the restrictions/limitations.

3. Staffing Process. The Joint Staff/J-8 CAD will staff all JROC Interest proposals (Figure C-2) before FCB review and Joint Integration proposals for certification (Figure C-3) to the organizations listed in Table C-1. Concurrent staffing of ICDs, CDDs, and CPDs is not permitted. If an ICD is required, it must complete flag staffing and comment resolution before any CDDs, CPDs, or joint DCRs that refer to that ICD can be submitted for staffing. The same rule applies for CDDs prior to CPD staffing. During the review process, the FCB working groups will evaluate how well the proposed approaches documented in an ICD (and solutions identified in a CDD, CPD, or joint DCR) addressed the

capability gaps identified in the JCIDS analyses. This process will include an O-6 review. The requirement for flag-level reviews will be based on the existence of unresolved critical comments.

a. Document Review Phase 1. Joint Staff/J-8 CAD will review and verify the document's format for accuracy and completeness. For this O-6 level review, J-8 will distribute the draft document using the KM/DS tool after the Gatekeeper assigns a JPD and lead and supporting FCBs. The suspense date will normally be 21 calendar days from the date the Gatekeeper releases the document for staffing. This review will include the Stage I initial threat validation and intelligence, IT, and NSS interoperability and supportability requirements certifications and weapon safety endorsement, as required. Comments should be prioritized as critical, substantive, or administrative (see definitions in the Glossary). Convincing support for critical and substantive comments will be provided in a comment and justification format.

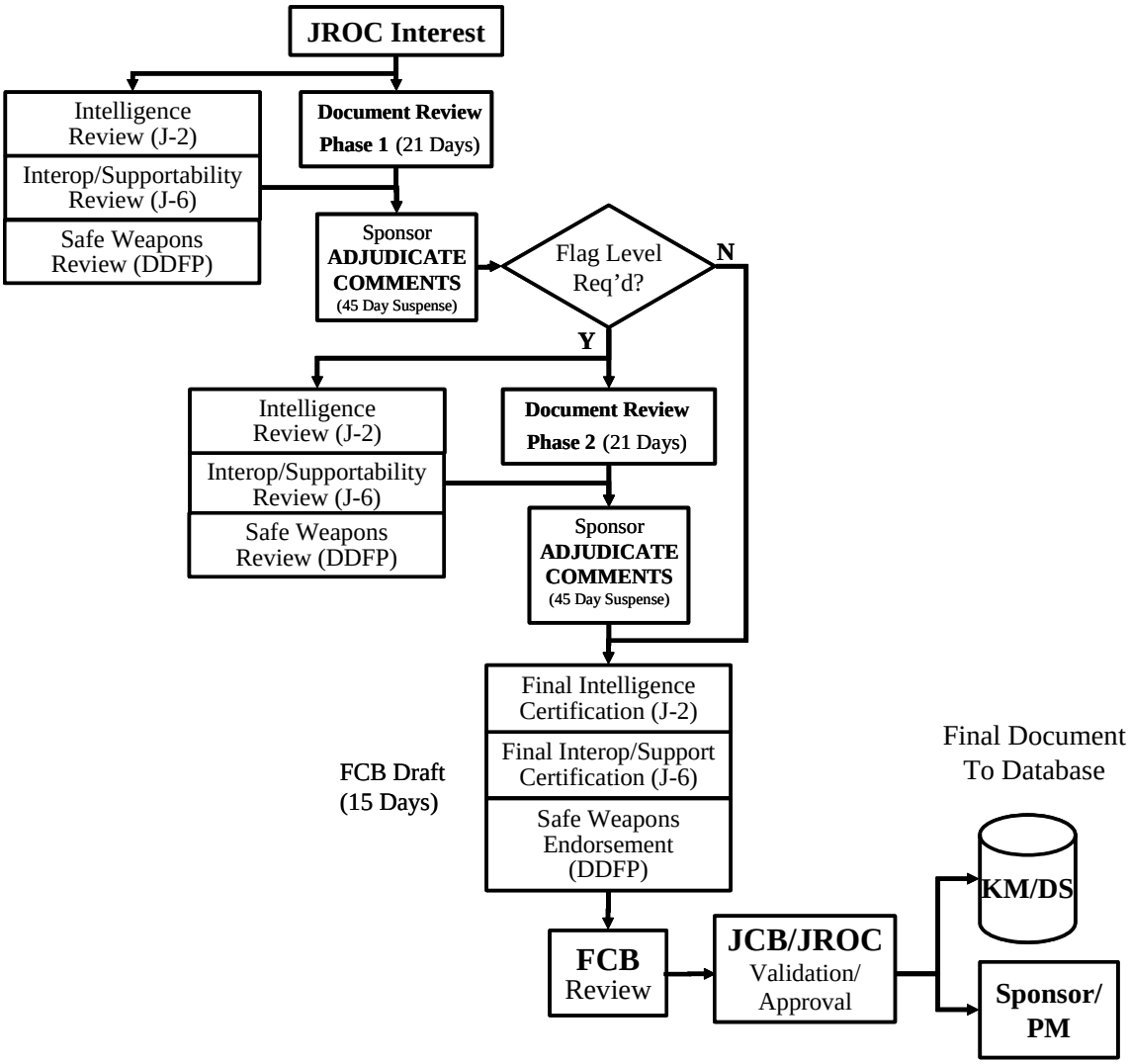

Figure C-2. JROC Interest Staffing Process

b. Adjudication of Document Review Phase 1 Comments. Joint Staff/J-8 CAD will release all comments to the sponsoring DOD component via KM/DS for resolution. The sponsor has 45 days to resolve comments. After revision of the document to reflect comment adjudication, the sponsor will return it to Joint Staff/J-8 CAD via KM/DS. The sponsor will provide a comment resolution matrix delineating the critical and substantive comments, the results of the intelligence, interoperability, and munitions supportability certifications, and the weapon safety endorsement recommendations received and the actions taken. If all comments are successfully resolved, it does not require flag-level staffing, and the document will be submitted as an FCB Draft for validation and approval. If the sponsor requires additional time to resolve comments, a request to extend the suspense is made through the lead FCB. An extension of less than 15 days can be approved by the FCB action office. An extension of 15 days or greater must be approved by the FCB Chair. If there are unresolved critical comments, the document will be submitted for flag-level staffing. For ease of review, all changes to the document should be highlighted. If the document is not resubmitted or an extension to the suspense granted by the FCB, the Joint Staff/J-8 will assume the sponsor intends to pull the document from the approval process and resubmit it at a later date.

c. FCB Working Group Assessment. The lead FCB working group may begin an assessment immediately after the Gatekeeper actions are complete. As a minimum, this review will include a timely review of the assigned JPD. If a change to the JPD is required, the Gatekeeper should be notified as soon as practical to prevent unnecessary delay in validating and approving the document. The sponsor will work with the lead FCB action officer to present the document to the working group as early as possible after comment adjudication to allow a full and rigorous independent assessment of the submitted document and supporting analysis (FAA, FNA, FSA, AoA, etc.). The sponsor and working group will resolve all issues or submit those they cannot resolve to the FCB.

d. Document Review Phase 2. The flag-level review is conducted if critical comments remain unadjudicated from the O-6 review. This review will focus on resolving the open critical comments and on the proposed resolution of critical comments submitted previously. This review will include Stage II threat validation and intelligence supportability, IT, and NSS interoperability certifications and weapon safety endorsement, as required. The suspense date assigned for providing comments and/or concurrence will normally be 21 calendar days from date the Gatekeeper releases the document for staffing.

e. Adjudication of Document Review Phase 2 Comments and Briefing Preparation. Upon completion of this review, Joint Staff/J-8 CAD will release all comments to the sponsor via KM/DS for final resolution. The sponsor has 15 days to resolve comments from flag-level review. Unresolved critical

comments will be brought to the FCB for assistance in resolution. Comments that cannot be resolved with FCB assistance within 15 days will be included in the briefing to the JCB and JROC with a recommendation from the FCB for resolution. Once the sponsor has incorporated necessary changes into its document and developed a briefing in accordance with reference aa, the sponsor will schedule a briefing to the lead FCB and request a JCB and JROC briefing date and time from the JROC Secretariat through KM/DS.

f. Final Certification and Weapon Safety Endorsement. Upon final adjudication of comments and submission of the FCB Draft version of the document to KM/DS, the J-8/DDFP, the Joint Staff/J-6, Joint Staff/J-2, and DIA will review the final document and the adjudicated comment resolution matrix to complete final interoperability and supportability and intelligence certifications and weapon safety endorsement. Upon satisfactory review, the J-6 will issue the interoperability certification (reference t), J-2 will issue intelligence certification (reference y), and J-8/DDFP will issue the final weapon safety endorsement. Certifications and endorsements should be received within 15 days of the FCB Draft document submission into KM/DS.

g. FCB Review. When the staffing process is complete for JROC Interest documents, the lead FCB will review the results and make a recommendation to the JROC regarding validation and/or approval of the document, as shown in Figure C-2.

(1) JROC Interest Documents. The FCB will evaluate and forward the JCIDS documents to the JROC, via the JCB, for validation. A representative from the FCB will set the stage for the JCB and JROC decision briefings by framing the proposal in terms of the functional area, the relevant range of military operations, and the timeframe under consideration. The FCB representative will present the FCB's recommendation and any outstanding issues to the JCB and the JROC and the relative priority of the initiative within the FCB's portfolio. The sponsor will then deliver the decision briefing. The JROC will validate and approve the proposal or return it to the sponsor for additional information, as required.

(2) JROC Briefing Format and Schedule. Briefings delivered to the FCB, the JCB, and the JROC will be prepared in accordance with reference aa. The sponsor will provide the updated draft document and briefing slides 48 hours before the FCB, JCB, or JROC brief. The sponsor should have any required JROC briefing completed at least 30 days prior to each milestone review.

(3) Approved Documents. The sponsor will ensure that the approved document is posted to the KM/DS database for future reference and cross-component harmonization.

h. FPO Review of Joint DCRs. FPOs (J-1: Manpower and Personnel; J-4: Facilities; J-7: Doctrine, Leadership and Education, and Training; J-8: Organization and Materiel) will provide an assessment of their specific functional process during their review of the joint DCRs during Phase 1 and Phase 2 of the document staffing.

i. Sponsor Validation and Approval. If a document is assigned a JPD of Joint Integration, Joint Information, or Independent, it will move into the validation and approval process as shown in Figures C-3 and C-4. The FCB may review the document for JPD accuracy and possible joint implications.

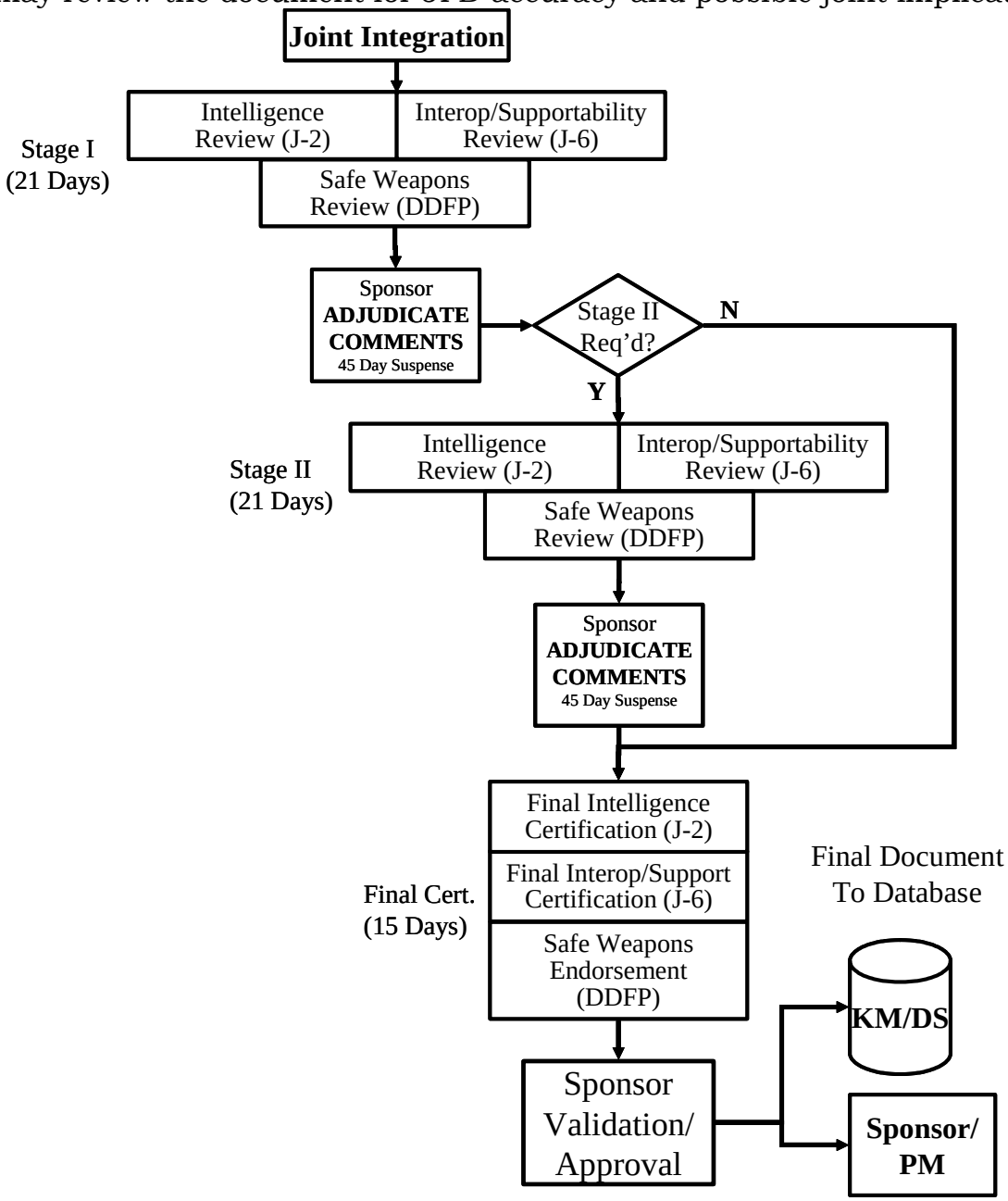

Figure C-3. Joint Integration Staffing Process

Following the review, the FCB may make recommendations to the Gatekeeper for redesignation of the JPD if required. If the JPD change is approved, the staffing process will be changed to reflect the new JPD.

(1) Joint Integration proposals in an ICD, CDD, or CPD will be staffed by Joint Staff/J-8 CAD through Stage I staffing for IT and NSS interoperability and supportability (not applicable for ICDs) and intelligence certifications and weapon safety endorsement. Documents will be resubmitted for Stage II staffing if there are unresolved critical comments from Stage I or if directed by the lead FCB. Both Stage I and Stage II reviews are conducted at the O-6 level for 21 days once the Gatekeeper releases the document for staffing. Upon completion of Stage II staffing, the final document and the adjudicated comment resolution matrix will be submitted to Joint Staff/J-2 and Joint Staff/J-6 for a final review to receive certification. The certifications may be reviewed by the FCB. All final weapons-related documents and their adjudicated comment resolution matrix shall also be submitted to the J-8/DDFP for review and formal endorsement. The document will then be returned to the sponsor for final validation and approval.

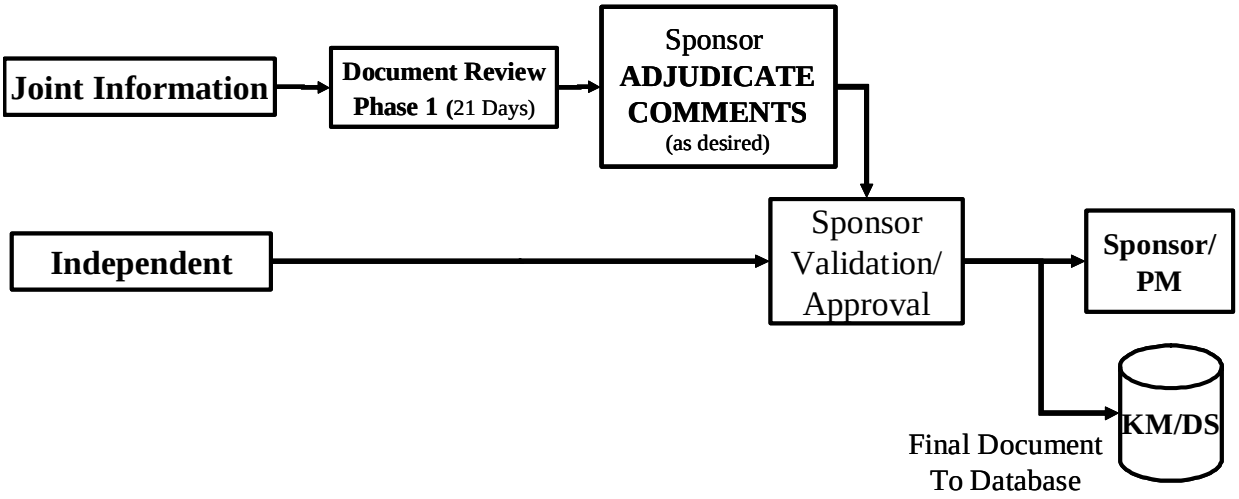

Figure C-4. Joint Information and Independent Staffing Process

(2) Documents designated as Joint Information will be staffed by Joint Staff/J-8 CAD through Document Review Phase 1 staffing (the same as that for JROC Interest) for informational purposes only and may be reviewed by the lead FCB (Figure C-4). Reviewers recommending a change in the document's JPD should notify J-8 as early as possible; the final JPD decision will be made by J-8. Disposition of the comments is at the discretion of the sponsor unless the JPD is changed. Upon completion of staffing, the document and comments will be returned to the sponsor for adjudication of the comments as they desire followed by validation and approval.

(3) Documents designated as Independent may be reviewed by the FCB (Figure C-4). They will be returned to the sponsor for validation and approval.

(4) When Joint Integration, Joint Information, and Independent documents are approved, the sponsor will post them to the KM/DS database for future reference and cross-component harmonization review.

j. JPD Appeal Process. The sponsor, Services, or other members of the FCB may appeal the JPD designation through the FCB. The resulting FCB recommendation will be forwarded to the Gatekeeper for resolution.

k. Document Revisions. When documents are updated, the staffing and approval path will be determined by the type of document, the scope of the change, and the JPD.

(1) JCD changes will be resubmitted for staffing and approval as JROC Interest documents.

(2) ICDs are not normally updated. Changes to an ICD result in a document that must be submitted through the JCIDS staffing and approval process.

(3) CDD and CPD changes will be resubmitted for staffing and approval under three circumstances:

(a) The document has a JPD of JROC Interest and the changes impact the KPPs. JROC Interest documents being updated with minor changes to the KPPs (or other changes if non-KPP approval was not delegated) will be reviewed by the lead FCB to determine if formal staffing is required. If changes are significant enough to require staffing, the standard process will apply. If no staffing is required, the status will be updated to reflect FCB Draft and the document will proceed through the validation and approval process.

(b) The document has a JPD of JROC Interest, the changes do not affect the KPPs, and validation authority for non-KPP changes has not been delegated to the sponsor by the JROC. The document will be reviewed by the lead FCB to determine if formal staffing is required. If changes are significant enough to require staffing, the standard process will apply. If no staffing is required, the status will be updated to reflect FCB Draft and the document will proceed through the validation and approval process.

(c) The document has a JPD of JROC Interest or Joint Integration and the changes only affect the NR-KPP. The document will be staffed to Joint Staff/J-6 for recertification of the NR-KPP via KM/DS. The Joint Staff/J-6 will determine if staffing is required prior to recertification.

(d) For all other cases, the sponsor has validation and approval authority over changes. The updated document must be submitted to KM/DS for archiving upon completion.

4. Waivers. If the sponsor is requesting a waiver to the JCIDS documentation requirements, the waiver will be submitted in the form of a memorandum addressed to the Joint Staff/J-8. The process is as follows:

a. The waiver request will be submitted into KM/DS as the document type that is being waived (e.g., ICD waiver request will be submitted as an ICD document type) with the staffing stage set to FCB Draft.

b. The Gatekeeper will assign the waiver request to the lead FCB and a Joint Staff/J-8/CAD Action Officer.

c. The lead FCB, in coordination with the CAD Action Officer, will develop a recommendation for approval/disapproval of the waiver. The request will be approved/disapproved by the Gatekeeper.

d. The final approval/disapproval memorandum will be attached to the request in KM/DS.

(INTENTIONALLY BLANK)

ENCLOSURE D

JOINT CAPABILITIES DOCUMENT

1. General

a. The JCD is the result of the FAA and FNA steps of a CBA that identifies what capabilities are important to the joint warfighter and how to evaluate future systems in their ability to deliver those capabilities. A CBA uses relevant parameters and associated metrics to quantify the key characteristics (attributes) of systems and forces to determine how capable they are of performing those critical tasks needed to accomplish future military objectives. The JCD will in general cover a much broader scope of capabilities than that described in an ICD. The JCD may be the predecessor document for one or more ICDs and/or joint DCRs.

b. The JCD describes capability gaps that exist in joint warfighting functions, as described in the JOpsC or CONOPs. The JCD establishes the linkage between the characteristics of the future joint force identified in the CCJO and the capabilities identified through the FAA. The JCD defines the capability gaps in terms of the functional area, the relevant range of military operations, and the timeframe under consideration. Table D-1 lists the documents that guide or depend on the development of the JCD. The JCD must capture the results of a well-framed CBA (FAA and FNA), as described in Enclosure A.

c. A JCD will be generated, validated, and approved to define and prioritize the capabilities required for joint warfighting. The JCD is used as the basis for one or more FSAs and resulting ICDs or joint DCRs. The JCD is informed by and will also be used as a basis for updating the integrated architectures and the capability roadmaps.

2. JCD Focus

a. The combatant command develops a JCD based on its UCP- and JSCP-assigned missions. This effort should be coordinated with the Joint Staff, Services, agencies, and USJFCOM. The JCD identifies the joint capabilities required to accomplish those missions, and through the CBA identifies gaps in those capabilities.

b. An FCB develops a JCD as directed by the JROC based on the CBA (FAA and FNA) of a JROC-approved JIC. The JCD documents the JCIDS analyses that describe the joint capabilities identified by the FCB and identifies the gaps in those capabilities.

Table D-1. JCD Linkage to Program Documents

Predecessor Documents and Information	Dependent Documents
JOpsC and CONOPs	Integrated Architectures
DPS	Technology Development Strategy
DIA Validated Threat Documents (Capstone Threat Assessments as available)	Test and Evaluation Strategy
Capability Roadmaps	Clinger-Cohen Certification for Major Automated Information Systems (MAIS)
Integrated Architectures	ICD
	Capability Roadmaps
	Joint DCR

c. CSAs with designated functional manager roles develop JCDs to define the capabilities necessary for their functional area of responsibility.

d. A sponsor may also develop a JCD to define the set of capabilities for a mission after coordination with the appropriate FCBs and combatant commands to ensure no duplication of work.

e. The JCD will identify the relative priority of the capability gaps and identify those areas where risk may be taken. The JROC will task sponsors with performing follow-on FSAs and development of ICDs when appropriate.

3. JCD Development and Documentation

a. The JCD supports the development of joint DCRs to implement non-materiel solutions and the development of ICDs for materiel solutions.

b. The JCD developer will prepare the JCD in coordination and/or collaboration with the appropriate DOD components, agencies, FCB working groups, OUSD(AT&L), Office of Program Analysis and Evaluation (OPA&E) (when appropriate), and integrated architecture leads. The JCD will include a description of the operational capability, capability gap, threat, shortcomings of existing systems, expected joint operating environments, the measures of effectiveness, program support, joint DOTMLPF, and policy impact and constraints for the capabilities.

c. The JCD will capture the results of the FAA and FNA, identifying the required joint capabilities and the current or projected gaps or redundancies. This JCD will identify the attributes and measures of effectiveness (MOE) and measures of performance (MOP) associated with these capabilities and prioritize the gaps based on operational considerations. The JCD will also identify areas where risk may be taken. The JCD will be submitted to the Joint Staff for JROC validation prior to initiation of the FSA. The Director, Operational Test and Evaluation (DOT&E) will advise on the testability of chosen MOEs and MOPs so that the system's performance measured in operational testing can be linked to the CBA. JCDs will be reviewed and updated as changes are made to the JOpsC. The JCD will be used as a baseline for one or more ICDs or joint DCRs.

d. All draft and approved JCDs should display appropriate classification and releasability markings.

e. The JCD format and detailed content instructions of the JCD are provided in Appendix A of this enclosure.

4. JCD Validation and Approval. The JROC validates and approves all JCDs.

5. JCD Publication and Archiving. Approved JCDs (SECRET and below) will be posted to the KM/DS tool so that all approved JCIDS documents are maintained in a single location.

(INTENTIONALLY BLANK)

APPENDIX A TO ENCLOSURE D

JOINT CAPABILITIES DOCUMENT FORMAT

CLASSIFICATION OR UNCLASSIFIED

JOINT CAPABILITIES DOCUMENT
FOR
TITLE

Validation Authority: JROC

Approval Authority: JROC

Designation: JROC Interest

Date

Note: Each subparagraph should be numbered to facilitate correlation and traceability and for ease of identifying issues during staffing. JCDs must be submitted in Microsoft Word (6.0 or greater) format. All JCDs must be clearly labeled with draft version number and date and include any caveats regarding releasability, even if unclassified. The intent is to share JCDs with allies and industry wherever possible at an appropriate time in the acquisition process. Draft documents will be submitted with line numbers displayed. Integrated architecture products will be embedded in the Microsoft Word file for ease of review during the staffing process.

1. Concept of Operations Summary. Describe the relevant part of the JOpsC, CONOPs, and/or UCP-assigned mission this JCD addresses; what operational outcomes it provides; what effects it must produce to achieve those outcomes; how it complements the integrated joint warfighting force; and what enabling capabilities are required to achieve its desired operational outcomes. If the JCD is not based on a previously approved CONOPs, the CONOPs will be included as an annex to the JCD.

2. Joint Functional Area. Cite the applicable functional areas, the range of military operations, and the timeframe under consideration. Also identify the relevant DPSs that apply to this JCD.

3. Required Capability. Describe the capabilities required and the timeframe in which they are required, as identified during the FAA. Identify the JCAs (Tier 1 and 2) to which the capabilities identified in this JCD contribute directly. The capabilities must be defined using the common lexicon for capabilities established in the JCAs. These capabilities may require support from one or more functional areas. Describe the tasks and functions that are required for the capability to be successfully employed in accomplishing the

mission. Address the need for the capability to comply with applicable DOD, joint, national, and international policies and regulations.

4. Capability Gaps and Overlaps or Redundancies. This section summarizes the results of the FNA.

a. Describe, in operational terms, the missions, tasks, and functions that cannot be performed or are unacceptably limited, or when and how they will become unacceptably limited. Identify whether the capability gap is due to lack of proficiency in existing capability (cannot accomplish the mission to the level expected), due to lack of sufficient capability (do not have enough of an effective capability) or the capability does not exist. Identify those capabilities for which there exist overlaps or redundancies. This discussion should also provide the linkage between the required capabilities, the key characteristics as defined in the JOpsC.

b. Describe the characteristics of the desired capabilities in terms of desired outcomes. Broad descriptions of desired outcomes help ensure that the required capabilities are addressed without constraining the solution space to a specific, and possibly limited, materiel system. Where multiple characteristics are identified, they should be prioritized based on value to delivering the capability within the context of the CONOPs described earlier. For instance, if delivering cargo, which is more important: speed, range, cargo size, cargo weight, etc.?

c. Where multiple capability gaps are identified, a recommended prioritization of the gaps should be developed. This prioritization should be based on their contribution to future joint operations. In addition, identify those gaps where risk may be taken to ensure resources are applied to high priority gaps.

d. Provide a table (X.X) summarizing all capability gaps, relevant parameters, and associated metrics as shown below. Indicate the minimum value below which the capability will no longer be effective. Also indicate the priority of the capability gaps and which characteristics are key. This will be the basis for creating the linkages between the capabilities and the systems during the development of subsequent ICDs, CDDs, and CPDs.

e. For those capabilities where overlaps or redundancies exist, assess whether the overlap is operationally acceptable, or if excessive overmatch exists and the overlap should be evaluated as part of the tradeoffs to satisfy capability gaps.

f. Descriptions of the identified capabilities should satisfy two rules:

(1) Rule 1. Capability descriptions must contain the required characteristics (attributes) with appropriate qualitative parameters and metrics, e.g., outcomes, time, distance, effect (including scale), obstacles to be overcome, and supportability.

(2) Rule 2. Capability descriptions should be general enough so as not to prejudice decisions in favor of a particular means of implementation but specific enough to evaluate alternative approaches to implement the capability.

Table X.X. Example Capability Description Table

Priority	CCJO character-istics	Description	Tier 1 & Tier 2 JCAs	Parameters	Minimum value
		Capability 1			
		Characteristic 1		Description	Value
		Characteristic n		Description	Value
		Capability 2			
		Characteristic 1		Description	Value
		Characteristic n		Description	Value
		Capability n			
		Characteristic 1		Description	Value
		Characteristic n		Description	Value

5. Threat and Operational Environment

a. Describe in general terms the operational environment, including joint operating environments, in which the capability must be exercised and the manner in which the capability will be employed.

b. Summarize the organizational resources that provided threat support to capability development efforts. Summarize the current and projected threat capabilities (lethal and non-lethal) to be countered. Reference the current DIA-validated threat documents and Service intelligence production center-approved products or data used to support the CBA. Contact the DIA's Defense Warning Office, Acquisition Support Division for assistance (DSN: 428-4521; SIPRNET: http://www.dia.smil.mil/admin/di/dwo/POC.shtml; or JWICS: http://www.dia.ic.gov/admin/di/dwo/Link.shtml).

6. Recommendations. Provide recommendations on which of the capability gaps to pursue and where risk should be taken based on the relative priority

and impact of the capability. If possible, identify a potential sponsor who will complete the capabilities-based assessment process and develop the required ICDs and/or joint DCRs to address the gaps.

Mandatory Appendices

Appendix A. Integrated Architecture Products. Include the required architecture framework view products developed, whenever possible, from integrated architectures. Formatting instructions are provided in reference u.

- Mandatory: OV-1
- Others as desired
- Note: Include only those architectural views not presented in the document.

Appendix B. References

Appendix C. Acronym List

Other Appendices or Annexes. As required to provide supporting information not included in the body of the JCD.

ENCLOSURE E

INITIAL CAPABILITIES DOCUMENT

1. General

a. The ICD documents the requirement to resolve a specific capability gap or a set of capability gaps for a given timeframe identified as the result of a CBA. It identifies possible solutions to the gap(s). A CBA uses relevant parameters and associated metrics to quantify the key characteristics (attributes) of systems and/or forces to determine how capable they are of performing those critical tasks needed to accomplish future military objectives.

b. The ICD describes capability gaps that exist in joint warfighting functions, as described in the JOpsC or CONOPs. The ICD establishes the linkage between the characteristics of the future joint force identified in the CCJO and the capabilities identified through the FAA. The ICD defines the capability gaps in the lexicon established for the JCAs, the relevant range of military operations, and the timeframe under consideration. Table E-1 lists the documents that guide or depend on the development of the ICD. The ICD must capture the results of a well-framed CBA, as described in Enclosure A.

Predecessor Documents and Information
JOpsC and CONOPs
JCDs (if applicable)
DPS
DIA Validated Threat Documents
DIA Initial Threat Warning Assessment
Integrated Architectures
Capability Roadmap

Dependent Documents
AoA Guidance
Technology Development Strategy
Test and Evaluation Strategy
Clinger-Cohen Certification for MAIS
CDD
CPD
Capability Roadmap
System Engineering Plan
Joint DCR

Table E-1. ICD Linkage to Program Documents

c. The ICD summarizes the results of DOTMLPF analysis and identifies any changes in US or allied doctrine, operational concepts, organization, training,

and policy that were considered in satisfying the deficiency. The ICD will identify and summarize the DOTMLPF and policy changes (non-materiel approaches) that may address the deficiency in part or in whole as part of the list of approaches addressed in the FSA. These DOTMLPF and policy changes may lead to the development of a joint DCR.

d. The ICD documents the evaluation of balanced and synchronized materiel and non-materiel approaches that are proposed to provide the required capability. It further proposes a prioritized list of materiel and non-materiel approaches based on analysis of the various possible approaches and their DOTMLPF or policy implications. Finally, the ICD describes how the approach(es) provides the desired joint capability and relates the desired capability to the characteristics of the future joint force identified in the CCJO Concepts or CONOPs.

e. For ACAT I programs, an ICD will be generated, validated, and approved to define and review the options for a new capability in a joint context and to ensure that all DOTMLPF and policy alternatives have been adequately considered, even if the program is proceeding directly to Milestone B or C. For those exceptional cases where ACAT II and below programs may be proceeding directly to Milestone B or C, the sponsor may request a waiver to the requirement for an ICD from the Joint Staff/J-8. The waiver request will provide justification for not writing an ICD. Upon approval of the waiver, the sponsor can proceed with submitting CDDs or CPDs for approval.

f. ICDs are not required when the mission need is identified via the ACTD/JCTD, qualified prototype projects, quick reaction technology projects, Lessons Learned, Integrated Priority Lists (IPL), joint IED defeat initiatives, or joint urgent operational need (JUON) processes. Mission-validated prototypes with formal MUAs do not require an ICD.

2. ICD Focus. The ICD documents the JCIDS analyses (described in Enclosure A) that describe one or more capability gaps and identifies potential non-materiel and materiel approaches to addressing those gaps. The approaches identified should cover the joint spectrum of possibilities. The result should not be a sponsor-stovepiped approach to a gap. The ICD supports the follow-on AoA, if required; development of integrated architectures; update of capability roadmaps; the Technology Development Strategy; and the Milestone A acquisition decision (see reference c for DOD space programs).

3. ICD Development and Documentation

a. For materiel approaches, the ICD guides the Concept Refinement and the Technology Development phases of the acquisition process and supports the Concept Decision and Milestone A acquisition decision (see reference c for DOD

space programs). The ICD may also support the development of a joint DCR to implement a non-materiel solution.

b. The ICD sponsor will prepare the ICD in coordination and/or collaboration with the appropriate DOD components, agencies, FCB working groups, OPA&E (when appropriate), OUSD(AT&L), applicable JCD leads, and integrated architecture leads. The DOT&E will advise on the testability of chosen MOEs and MOPs so that the system's performance measured in operational testing can be linked to the CBA. The ICD will include a description of the operational capability, capability gap, threat, expected joint operating environments, shortcomings of existing systems, the MOEs and MOPs, program support, joint DOTMLPF, and policy impact and constraints for the capabilities. The ICD should also address safe storage, handling, transport, and use in joint operating environments for any weapon solution.

c. The ICD may be developed as a single document defining required capabilities and approaches to providing those capabilities. ICDs may also be developed based on the analysis in an approved JCD combined with a completed FSA that addresses one or more of the capability gaps identified in the JCD.

d. All draft and approved ICDs should display appropriate classification and releasability markings.

e. The ICD format and detailed content instructions of the ICD are provided in Appendix A of this enclosure.

4. ICD Validation and Approval. The determination of the validation and approval authorities for the ICD depends on the JPD assigned by the Gatekeeper, as described in Enclosure C.

5. ICD Publication and Archiving. Approved ICDs (SECRET and below), regardless of ACAT or JPD designation, will be posted to the KM/DS tool so that all approved JCIDS documents are maintained in a single location.

(INTENTIONALLY BLANK)

APPENDIX A TO ENCLOSURE E

INITIAL CAPABILITIES DOCUMENT FORMAT

CLASSIFICATION OR UNCLASSIFIED
INITIAL CAPABILITIES DOCUMENT
FOR
TITLE

Potential ACAT: _____

Validation Authority: _____

Approval Authority: _____

Milestone Decision Authority: _____

Designation: JROC Interest/Joint Integration/Joint Information/Independent

Prepared for Concept Refinement Decision
(or specify other acquisition decision point)

Date

Note: Each subparagraph should be numbered to facilitate correlation and traceability and for ease of identifying issues during staffing. ICDs must be submitted in Microsoft Word (6.0 or greater) format. All ICDs must be clearly labeled with draft version number and date and include any caveats regarding releasability, even if unclassified. The intent is to share ICDs with allies and industry wherever possible at an appropriate time in the acquisition process. Draft documents will be submitted with line numbers displayed. Integrated architecture products will be embedded in the Microsoft Word file for ease of review during the staffing process. Ideally, the body of the ICD should be no more than 10 pages long.

1. Concept of Operations Summary. Describe the relevant part of the JOpsC, CONOPs, and/or UCP-assigned mission to which this capability contributes; what operational outcomes it provides; what effects it must produce to achieve those outcomes; how it complements the integrated joint warfighting force; and what enabling capabilities are required to achieve its desired operational outcomes. If the ICD is not based on a previously approved CONOPs, the CONOPs will be included as an annex to the ICD.

2. Joint Functional Area. Cite the applicable functional areas, the range of military operations, and the timeframe under consideration. Also identify the relevant DPSs that apply to this ICD.

3. Required Capability. Describe the capabilities required and the timeframe in which they are required as identified during the FAA. Describe the particular aspects of the JOpsC that the ICD addresses and explain why the

required capabilities are essential to the joint force commander to achieve military objectives. Address the need for the capability to comply with applicable DOD, joint, national, and international policies and regulations. Identify the JCAs (Tier 1 and 2) to which the capabilities identified in this ICD contribute directly. Define the capabilities using the common lexicon for capabilities established in the JCAs. Reference any validated JCDs capability gaps for which this ICD is identifying approaches.

4. Capability Gaps and Overlaps or Redundancies

a. Describe, in operational terms, the missions, tasks, and functions that cannot be performed or are unacceptably limited or when and how they will become unacceptably limited. Identify whether the capability gap is due to lack of proficiency in existing capability (cannot accomplish the mission to the level expected), or due to lack of sufficient capability (do not have enough of an effective capability), or the capability does not exist, or the capability needs to be recapitalized. Identify those capabilities for which there exist overlaps or redundancies. This discussion should also provide the linkage between the required capabilities and the characteristics of the future joint force identified in the CCJO and/or CONOPs.

b. Describe the attributes of the desired capabilities in terms of desired outcomes. Broad descriptions of desired outcomes help ensure that the required capabilities are addressed without constraining the solution space to a specific, and possibly limited, materiel system. Where multiple characteristics are identified, they should be prioritized based on value to delivering the capability within the context of the CONOPs described earlier. For instance, if delivering cargo, which is more important: speed, range, cargo size, cargo weight, etc.?

c. Where multiple capability gaps are identified, a recommended prioritization of the gaps should be developed. This prioritization should be based on the prioritized attributes for the capabilities. In addition, identify those gaps where risk may be taken to ensure resources are applied to high priority gaps.

d. Provide a table (X.X) summarizing all capability gaps, relevant parameters, and associated metrics as shown below. Indicate the minimum value below which the capability will no longer be effective. Also indicate the priority of the capability gaps and which characteristics are key. This will be the basis for creating the linkages between the capabilities and the systems during the development of subsequent CDDs and CPDs.

e. For those capabilities where overlaps or redundancies exist, assess whether the overlap is operationally acceptable, or if excessive overmatch exists

and the overlap should be evaluated as part of the tradeoffs to satisfy capability gaps.

f. Definitions of the identified capabilities should satisfy two rules:

(1) Rule 1. Capability definitions must contain the required characteristics (attributes) with appropriate qualitative parameters and metrics, e.g., outcomes, time, distance, effect (including scale), obstacles to be overcome, and supportability.

(2) Rule 2. Capability definitions should be general enough so as not to prejudice decisions in favor of a particular means of implementation but specific enough to evaluate alternative approaches to implement the capability.

Table X.X. Example Capability Description Table

Priority	CCJO character-istics	Description	Tier 1 & Tier 2 JCAs	Parameters	Minimum value
		Capability 1			
		Characteristic 1		Description	Value
		Characteristic n		Description	Value
		Capability 2			
		Characteristic 1		Description	Value
		Characteristic n		Description	Value
		Capability n			
		Characteristic 1		Description	Value
		Characteristic n		Description	Value

g. The discussion above should capture the FAA and FNA described in Enclosure A.

5. Threat and Operational Environment

a. Describe in general terms the operational environment, including joint operating environments, in which the capability must be exercised and the manner in which the capability will be employed. Summarize the organizational resources that provided threat support to capability development efforts.

b. Summarize the current and projected threat capabilities (lethal and non-lethal) to be countered. Reference the current DIA-validated threat documents and Service intelligence production center-approved products or data used to

support the CBA. Contact the DIA's Defense Warning Office, Acquisition Support Division for assistance (DSN: 428-4521; SIPRNET: http://www.dia.smil.mil/admin/di/dwo/POC.shtml or JWICS: http://www.dia.ic.gov/admin/di/dwo/Link.shtml).

6. Functional Solution Analysis Summary. The subparagraphs below summarize the results of the FSA as described in Enclosure A.

a. Ideas for Non-Materiel Approaches (DOTMLPF Analysis). Summarize the results of the analysis. Identify any changes in US or allied doctrine, operational concepts, tactics, organization, training, materiel, leadership and education, personnel, facilities, or policy that are considered in satisfying the deficiency in part or in whole. If one or more non-materiel approaches are a possibility, they should be summarized and included in the analysis of materiel and non-materiel approaches.

b. Ideas for Materiel Approaches. If a materiel approach may be required to address a capability gap, list the materiel approaches that should be considered during the analysis. This list should leverage the expertise of the components, laboratories, agencies, and industry to provide a robust set of divergent materiel approaches that includes single- and multi-Service, multi-agency, allied, and other appropriate FoS or SoS approaches. Indicate potential areas of study for concept refinement. These areas may include the use of existing and future US or allied military or commercial systems, including modified commercial systems or product improvements of existing systems and potential international cooperative developments.

c. Analysis of Materiel/Non-Materiel Approaches (AMA). Summarize how the proposed materiel and non-materiel approaches address capability gaps, using wherever possible the JROC-approved key attributes and the metrics of the functional area integrated architecture and applicable US-ratified international standardization agreements (reference e). Address all approaches identified by the analysis body. The analysis will produce a list of approaches that may provide the capabilities required by the user. To produce the list, the AMA will consider the integrated architecture approved metrics, applicable US-ratified international standardization agreements, technological maturity, and the overall impact of the solution on the functional and cross-functional areas. The approaches may be a combination of materiel and non-materiel solutions that deliver the desired capability. For FoS and/or SoS approaches, the analysis will identify the impact of synchronization on the approach. Ensure all aspects of the AMA are addressed as described in Enclosure A.

7. Final Recommendations. Describe the best materiel and/or non-materiel approaches as determined by the FSA. This should include consideration of combinations of non-materiel and materiel approaches that can be used to address the entire capability gap.

a. Describe the non-materiel recommendations that should be considered for implementation through a joint DCR.

b. Describe the non-materiel recommendations that should be considered for implementation through a sponsor's internal DOTMLPF change process.

c. Describe the materiel approach(es) recommended for further analysis during concept refinement and technology development.

(1) If an evolutionary acquisition approach is recommended, also discuss the minimum capability required to fill the gap described in paragraph 2 of the ICD, in the near term and for the long term. If the program is expected to proceed immediately to a Milestone B or C decision, describe the materiel recommendations proposed to be further analyzed during SDD.

(2) Describe the key boundary conditions, including DOTMLPF and policy constraints, within which the AoA should be performed. These constraints must be crafted to allow reasonable compromise between focusing the AoA and ensuring that the AoA considers novel and imaginative alternative solutions. The key boundary conditions must reflect a thorough understanding of the functional and operational areas and the conditions under which the ultimate system(s) must perform.

(3) Discuss the non-materiel and/or DOTMLPF and policy implications and constraints of the recommended materiel approach or approaches.

Mandatory Appendices

Appendix A. Integrated Architecture Products. Include the required architecture framework view products developed, whenever possible, from integrated architectures. Formatting instructions are provided in reference u.

- Mandatory: OV-1
- Others as desired
- Note: Include only those architectural views not presented in the document.

Appendix B. References

Appendix C. Acronym List

Other Appendices or Annexes. As required to provide supporting information not included in the body of the ICD.

(INTENTIONALLY BLANK)

ENCLOSURE F

CAPABILITY DEVELOPMENT DOCUMENT

1. General

a. The CDD is the sponsor's primary means of defining authoritative, measurable, and testable capabilities needed by the warfighters to support the SDD phase of an acquisition program. Table F-1 lists the types of documents that precede or depend on the CDD. Integrated architectures, applicable JCDs, the ICD, the AoA (unless waived by the MDA), and the technology development strategy guide development of the CDD. The CDD captures the information necessary to deliver an affordable and supportable capability using mature technology within one or more increments of an acquisition strategy. The CDD must include a description of the DOTMLPF and policy impacts and constraints. The CDD will be validated and approved before Milestone B. The CDD will be validated and approved prior to program initiation for shipbuilding programs.

b. For DOD space programs, reference c will guide the development of the appropriate documentation. The initial CDD will be used to support key decision point (KDP)-A. It is not sufficient to support a KDP-B decision. For the KDP-B, a full CDD will be developed and approved by the JROC. The initial CDD required by reference c for DOD space programs will differ from a full CDD in that the operational view architecture products will be complete, but the systems and technical view products may be incomplete. Because the architecture products are not complete, an NR-KPP certification will not be received on initial CDDs. In addition, the potential KPPs are identified, but the thresholds and objectives may not be finalized.

c. In an evolutionary acquisition program, the capabilities delivered by a specific increment may provide only a part of the ultimate desired capability; therefore, the first increment's CDD must provide information regarding the strategy for achieving the full capability. Subsequent increments leading to the full capability are also described to give an overall understanding of the program preliminary approach. If sufficient information is available to define the attributes and applicable KPPs for subsequent increments, the CDD may describe multiple increments for validation and approval. Updates to the CDD will be required if there are changes to the validated KPPs due to lessons learned from previous increments, changes in the JOpsC, CONOPs, or integrated architectures, and other pertinent information. Additionally, the AoA should be reviewed for its relevance for each program to each CDD increment and, if necessary, should be updated or a new AoA initiated.

d. The CDD provides the operational performance attributes necessary for the acquisition community to design a proposed system(s) and establish a program baseline. It identifies the performance attributes, including KPPs, that will guide the development and demonstration of the proposed increment(s). Guidance for the development of KPPs is provided in Enclosure B. The performance attributes and KPPs will apply only to the designated increment(s). If the plan requires a single step to deliver the full capability, the KPPs will apply to the entire system(s). Each increment must provide a safe, operationally effective, suitable, and useful capability in the intended mission environment that is commensurate with the investment and independent of any subsequent increment.

Table F-1. CDD Linkage to Program Documents

Predecessor Documents and Information	**Dependent Documents**
JOpsC and CONOPs	Acquisition Program Baseline (APB) for Milestone B of the Current Increment
JCDs and ICDs	Cost Analysis Requirements Description
Technology Development Strategy	Clinger-Cohen Certification (Updated for Milestone B for MAIS)
System Threat Assessment	Acquisition Strategy
AoA Report	Test and Evaluation Master Plan
Integrated Architectures	DD Form 1494 (Required to Obtain Spectrum Certification)
Complete Automated Standards Profile as Required in reference t	ISP
Capability Roadmap	Capability Roadmap
MUAs/final demonstration report for JCTD/ACTDs and qualified prototype projects	System Engineering Plan
	Manpower Estimate
	CPD

e. The CDD articulates the attributes that may be further refined in the CPD. It states the essential attributes of a program, including affordability and supportability, from the warfighter's perspective. The CDD shall be updated or appended for each Milestone B decision. If the validated CDD specified

multiple increments, revalidation is not required prior to each Milestone B unless there are changes to the validated KPPs.

f. The CDD addresses a single system or SoS only, although it may refer to any related systems needed in an FoS or an SoS approach necessary to provide the required capability. When the ICD recommends a materiel approach consisting of an FoS, each individual system will have its own CDD. An SoS will normally be treated as if it were a single system using a single CDD to describe highly interdependent systems that provide the capability using an SoS. When the CDD is being used to describe an SoS approach, it must address both the SoS KPPs and attributes and any unique KPPs and other attributes for each of the constituent systems. There may be cases where an individual system that is part of an SoS will be part of a separate acquisition. A CDD describing this system with linkages to the complete SoS will be developed. When it is necessary to synchronize development of systems to ensure delivery of a capability, the CDD will identify the source ICDs and the related CDDs and CPDs. For example, a program addressing a capability gap may require two unique or separate systems to provide the required capability (e.g., a bomb and an unmanned aerial vehicle). Conversely, there are also cases where related but different capabilities can be included in one CDD. For example, the development of a multi-mission aircraft could be captured in a single CDD. A CDD may also describe multiple increments of a program to deliver the required capabilities. The CDD will clearly describe the KPPs, KSAs, and other attributes, and their thresholds and objectives that apply to each increment.

g. When the sponsor of a JCTD/ACTD, qualified prototype project, or quick-reaction technology project determines that the demonstration is complete but additional development is required before fielding, a CDD will be developed to guide the development process. The MUA (completed at the end of the JCTD/ACTD, qualified prototype project, or quick-reaction technology project) will be used to support the development of the CDD. The CDD with the supporting MUA will then be submitted for staffing and approval prior to the Milestone B decision.

h. Care must be taken to stabilize and not overspecify attributes. Those attributes that contribute to the characteristics of the future joint force identified in the CCJO will be designated as KPPs. To supply the necessary performance attributes, the program manager (PM) will develop system-level details in technical documentation.

i. For IT systems with a development cost exceeding $15 million, the sponsor will develop a CDD. The spiral development approach for IT systems requires a variation to the application of the JCIDS documentation. The CDD will be developed describing the objective of up to 5 years of software releases.

The CDD will be validated and approved once for all of the software releases over that time.

2. CDD Focus. The CDD specifies the attributes of a system in development. These will provide or contribute to the operational capabilities that are inserted into the performance section of the acquisition strategy and the APB. All CDD KPPs (and KSAs supporting the sustainment KPP) are inserted verbatim into the APB. MOE and suitability, developed for the initial Test and Evaluation Master Plan (TEMP) at Milestone B, are based on the performance attributes and KPPs identified in the CDD.

3. CDD Development and Documentation

a. The CDD is generated prior to Milestone B of the acquisition process. The CDD is an entrance criteria item that is necessary to proceed to each Milestone B acquisition decision. It describes a technologically mature and affordable increment(s) of a militarily useful capability that was demonstrated in an operationally relevant environment. The CDD will support entry into SDD and refinement of integrated architectures (see reference c for DOD space programs).

b. The CDD sponsor will apply lessons learned during the Technology Development phase, plus any other appropriate risk reduction activities, MUAs, JCTD/ACTDs, qualified prototype projects, quick-reaction technology projects, market research, experimentation, test and evaluation, capability and schedule tradeoffs, and affordability and supportability analysis in the development of the CDD.

c. The CDD sponsor, in coordination and collaboration with the appropriate DOD components (including the MDA-designated developer), agencies, FCB working groups, and applicable ICD and JCD leads, will prepare the CDD. The CDD sponsor also will collaborate with sponsors of other CDDs and CPDs that are required in FoS or SoS solutions, particularly those generated from a common ICD. In some of these cases it may be appropriate to develop annexes for the CDD. The annexes would describe excursions from the CDD to meet other sponsors' specific capability gaps. The annexes do not repeat information already contained in the CDD but only describe the changes. The CDD will include a description of the operational capability; threat; links to all applicable integrated architectures; US-ratified materiel international standardization agreements (reference bb); required capabilities; program support; sustainment; force structure; DOTMLPF and policy impacts and constraints; and schedule and program affordability for the system.

d. CDD development should leverage off related analysis and development with the associated ISP required by reference s. As required capabilities are developed, the output from the information needs discovery process (reference

s) should help update the required architecture products and identify the elements of required program support for inclusion in the CDD.

e. Draft and approved CDDs, both classified and unclassified, should be carefully marked to indicate whether the document is releasable to allies, industry, or the public.

f. The CDD format and detailed content instructions are provided at Appendix A of this enclosure.

4. CDD Validation and Approval. The determination of the validation and approval authorities for the CDD depends on the JPD assigned by the Gatekeeper (as described in Enclosure C).

a. The JROC will review, validate, and approve JROC Interest CDDs. In addition, the JROC may, at its discretion, review CDDs at any time deemed appropriate.

(1) The JROC may retain complete approval authority over JROC Interest CDDs (i.e., no changes of any kind allowed without consent of the JROC) or may delegate approval authority for non-KPP changes to a component. JROC approval of JROC Interest CDDs is required any time a recommendation is made to change a KPP.

(2) Delegation of approval authority for JROC Interest CDDs allows the designated lead component, in coordination with other appropriate DOD components, to make non-KPP tradeoffs between acquisition milestones for the specific increment without JROC approval. Delegation of approval authority will not usually be granted beyond the increment(s) described in the CDD in an evolutionary acquisition.

5. Certifications and Weapon Safety Endorsement. JROC Interest CDDs will receive applicable intelligence and IT and NSS interoperability and supportability certifications prior to JROC validation. Joint Integration CDDs also will receive these certifications as required and may be assessed by the FCB working group and reviewed by the FCB before they are returned to the sponsoring component for validation and approval. Joint Information and Independent CDDs do not require certification and may be assessed by the FCB working group, reviewed by the FCB, and returned to the sponsor for validation and approval. All weapon-related CDDS will receive a weapon safety endorsement.

6. Formal CDD Staffing. The first step in obtaining validation and approval is the formal review of the document. The staffing process is described in Enclosure C. Supporting documentation, such as AoA results, ICDs, and any additional previously approved documents, should be made available electronically for inclusion in the package. The CDD should not be submitted

until the AoA or other supporting analysis is completed. If an AoA has not been conducted, an explanation and an electronic copy of whatever alternative analysis has been performed (or planned) will be made available or attached.

7. CDD Review and Revalidation. The CDD is refined and updated when necessary and before the Milestone B decision for each increment. This update will incorporate the results of the activities during the acquisition phase (i.e., cost, schedule and performance tradeoffs, testing, and lessons learned from previous increments). Two options are available for second (and follow-on) increment CDDs. If the follow-on increment is consistent with the description and strategy described in previous CDDs and the only changes are to the capabilities provided by the new increment (described in paragraph 5 of the CDD), an addendum to the previous CDD may be developed for validation and approval, as appropriate. If the increment contains significant revisions to the overall strategy, the capabilities provided by the next or future increments, or changes to the KPPs, an appropriately revised CDD should be submitted. For space programs, an additional update is required to support the KDP-C decision (reference c). If the CDD for a space program has not changed between KDP-B and KDP-C, the JROC does not need to reapprove it, but a new J-6 certification may be required if there are changes to the NR-KPP.

8. CDD Publication and Archiving. Approved CDDs (SECRET and below), regardless of JPD designation, will be posted to the KM/DS tool so that all approved JCIDS documents are maintained in a single location.

9. System Capabilities. The CDD identifies, in threshold-objective format, the attributes that contribute most significantly to the desired operational capability as discussed in Enclosure B. These attributes will be used to guide the acquisition community in making tradeoffs between the threshold and the objective levels of the stated attributes. Tradeoffs must be assessed for their impact on the capability gaps identified in the source ICDs or other JROC validated source documents. When an attribute's values change in follow-on increments, the CDD should include the values for previous increments for reference purposes.

10. Key Performance Parameters. The KPP threshold and objective values are based on results of efforts and studies that occur prior to Milestone B, including the Technology Development phase (if applicable). Each selected KPP should be directly traceable to the most critically needed attributes of capabilities defined in the ICD or other JROC-validated JROC source documents and to the characteristics of the future joint force identified in the CCJO. Guidance for the development of KPPs is provided in Enclosure B. In selecting KPPs and their values, the sponsor will leverage the expertise of the operational users and the acquisition community and consider technology maturity, fiscal constraints, and the timeframe when the capability is required. The CDD will contain all of the KPPs that capture the attributes needed to

achieve the overall desired capabilities for the system(s). Failure to meet a CDD KPP threshold can be cause for re-evaluation of the system selection, reassessment of the program, or modification of the content of production increments.

a. CDD KPPs are inserted verbatim into the performance section of the APB. KPPs will be developed relating to each of the characteristics of the future joint force in the CCJO when the system contributes to those capabilities. A NR-KPP will be a mandatory KPP in every increment for programs that exchange information. Force protection and survivability KPPs are mandatory for any manned system or system designed to enhance personnel survivability when the system may be employed in an asymmetric threat environment. A sustainment KPP is mandatory for all JROC Interest CDDs. System training and energy efficiency should be considered as KPPs if the analysis supports their inclusion. If the analysis does not support the need for these KPPs, the analysis will provide the justification. If the sponsor determines that any of the mandatory KPPs do not apply, the sponsor will provide justification in the CDD.

b. The CDD should document how its KPPs are responsive to applicable JCD capabilities and key characteristics and/or metrics. For JCDs to be effective, it is essential that all JCD sponsors review all related JROC Interest and Joint Integration CDDs and CPDs for applicability to their JCD. This support is important because CDD and CPD authors cannot in all cases be expected to understand the full impact and scope of every JCD.

(INTENTIONALLY BLANK)

APPENDIX A TO ENCLOSURE F

CAPABILITY DEVELOPMENT DOCUMENT FORMAT

CLASSIFICATION OR UNCLASSIFIED

CAPABILITY DEVELOPMENT DOCUMENT
FOR
TITLE

Increment: _____

ACAT: _____

Validation Authority: _____

Approval Authority: _____

Milestone Decision Authority: _____

Designation: JROC Interest/Joint Integration/Joint Information/Independent

Prepared for Milestone B Decision (or specify other acquisition decision point)

Date

Note: Each subparagraph should be numbered to facilitate correlation and traceability and for ease of identifying issues during staffing. CDDs must be submitted in Microsoft Word (6.0 or greater) format. Provide the SV-6 as a separate file in Microsoft Excel format for ease of importation into analysis tools. All CDDs must be clearly labeled with draft version number, increment, and date and must include any caveats regarding releasability, even if unclassified. The intent is to share CDDs with allies and industry wherever possible at an appropriate time in the acquisition process. Draft documents will be submitted with line numbers displayed. Integrated architecture products will be embedded in the Microsoft Word file for ease of review during the staffing process. Ideally, the body of a CDD for complex systems should be no more than 35 pages long.

Executive Summary (2 pages maximum)

Revision History

Table of Contents (with list of tables, figures and appendices)

Points of Contact

1. Capability Discussion. Cite the applicable ICDs and/or applicable MUAs and provide an overview of the capability gap in terms of relevant range of military operations and the timeframe under consideration. Update the ICD description of the expected joint operating environments. Describe the capability that the program delivers and how it relates to the characteristics of the future joint force as identified in the CCJO, CONOPs, and integrated

architectures. The capability must be defined using the common lexicon for capabilities established in the JCAs. Discuss how the increment(s) contributes to the required capability.

a. Discuss the operating environment of the system. Address how the capability will be employed on the battlefield and where it will be employed and/or based.

b. If the CDD is part of an FoS or SoS solution, identify the source JCD or ICD and discuss the related CDDs, CPDs, integrating DOTMLPF, and policy changes and required synchronization.

c. Cite any additional previously approved JCIDS documents pertaining to the proposed system.

d. Identify the JCAs (Tier 1 and 2) in which the capabilities being delivered through this CDD contribute to directly.

2. Analysis Summary. Summarize all analyses (i.e., AoA and/or other support analysis) conducted to determine the system attributes and to identify the KPPs. Include the alternatives, objective, criteria, assumptions, recommendation, and conclusion. A description of the analysis methodology and the analysis results shall be provided in an appendix.

3. Concept of Operations Summary. Describe the relevant part of the JOpsC, CONOPs, and/or UCP-assigned mission to which this capability contributes, what operational outcomes it provides, what effects it must produce to achieve those outcomes, how it complements the integrated joint warfighting force, and what enabling capabilities are required to achieve its desired operational outcomes.

4. Threat Summary. Summarize the projected threat environment and the specific threat capabilities to be countered. Include the nature of the threat, threat tactics, and projected threat capabilities (both lethal and nonlethal) over time. Programs designated as ACAT I/ID (or potential ACAT I/ID) must incorporate DIA-validated threat references. All other programs may use Service intelligence center-approved products and data. Summarize the organizational resources that provided threat support to capability development efforts. Contact the DIA's Defense Warning Office, Acquisition Support Division for assistance (DSN: 428-4521;
SIPRNET: www.dia.smil.mil/admin/di/dwo/POC.shtml or
JWICS: www.dia.ic.gov/admin/di/dwo/Link.shtml).

5. Program Summary. Provide a summary of the overall program strategy for reaching full capability and the relationship between the increment addressed by the current CDD and any other increments of the program. The timing of delivery of each increment is important. Carefully address the considerations

(e.g., technologies to be developed, other systems in an FoS or SoS, inactivation of legacy systems) that are driving the incremental delivery plan. For follow-on increments, discuss any updates to the program strategy to reflect lessons learned from previous increments, changes in JOpsC, CONOPs, or integrated architectures or other pertinent information. Identify known external dependencies and associated risks. In addition, provide an update on the acquisition status of previous increments.

6. System Capabilities Required for the Increment(s)

a. Provide a description of each attribute and list each attribute in a separate numbered subparagraph. Include a supporting rationale for the capability and cite any analytic references. When appropriate, the description should include any unique operating environments for the system. Provide any additional information that the PM should consider. If the CDD is describing an SoS solution, it must describe the attributes for the SoS level of performance and any unique attributes for each of the constituent systems. If the CDD is describing multiple increments, clearly identify which attributes apply to each increment.

b. Present each attribute in output-oriented, measurable and testable terms. For each attribute, provide a threshold and an objective value. When there are multiple increments and the threshold changes between increments, clearly identify the threshold for each increment. The PM will use this information to provide incentives for the developing contractor or to weigh capability tradeoffs between threshold and objective values. Expressing capabilities in this manner enables the systems engineering process to develop an optimal product. If the objective and the threshold values are the same, indicate this by including the statement "Threshold = Objective."

c. For IT systems using a spiral development approach, the CDD will describe the objective of up to 5 years of software releases. The CDD will identify the overall objective thresholds and objectives for the performance attributes of the system to be achieved at the end of the up to 5 years of software releases.

d. Provide tables summarizing specified KPPs, KSAs, and additional performance attributes in threshold/objective format, as depicted below. For each KPP, identify the characteristics of the future joint force identified in the CCJO. Also provide a general discussion of the additional performance attributes.

CCJO characteristics	Key Performance Parameter	Development Threshold	Development Objective
	KPP 1	Value	Value
	KPP 2	Value	Value
	KPP 3	Value	Value

Table X.X. Example Key Performance Parameter Table

CCJO characteristics	Key System Attributes	Development Threshold	Development Objective
	KSA 1	Value	Value
	KSA 2	Value	Value
	KSA 3	Value	Value

Table X.X. Example Key System Attributes Table

Attribute	Development Threshold	Development Objective
Attribute	Value	Value
Attribute	Value	Value

Table X.X. Additional Attributes

e. For weapon programs, the required joint operating environment attributes and performance parameters must be addressed as the basis for the weapon safety endorsement. Identify, as specifically as possible, all projected requirements necessary to provide for safe weapon storage, handling, transportation, or use by joint forces throughout the weapon lifecycle, to include required performance and descriptive, qualitative, or quantitative attributes.

f. In accordance with the procedures described in references r, s, and t, develop the CDD NR-KPP from the integrated architecture. Force protection and survivability KPPs are mandatory for any manned system or system designed to enhance personnel survivability when the system may be employed in an asymmetric threat environment. A sustainment KPP is mandatory for all JROC Interest CDDs.

g. If the sponsor determines that any of the mandatory KPPs do not apply, the sponsor will provide justification.

7. Family of System and System of System Synchronization. In FoS and SoS solutions, the CDD sponsor is responsible for ensuring that related solutions,

specified in other CDDs and CPDs, remain compatible and that the development is synchronized. These related solutions should tie to a common JCD or ICD. The CDD sponsor, in coordination with the FCBs, is also responsible for ensuring that the CDD accurately captures the desired capabilities described in applicable JCDs.

a. Discuss the relationship of the system described in this CDD to other systems contributing to the capability(ies). Discuss any overarching DOTMLPF and policy changes that are required to make the FoS/SoS an effective military capability.

b. Provide a table that briefly describes the contribution this CDD makes to the capabilities described in the applicable JCDs and ICDs and the relationships to other CDDs and CPDs that also support these capabilities. For these interfaces to be effective, it is essential the CDD sponsor review all related JROC Interest and Joint Integration JCDs, ICDs, CDDs, and CPDs for applicability to the FoS or SoS addressed by this CDD. Also identify the primary JCAs (Tier1 & 2) supported by this CDD. If the CDD is not based on JCD or ICD validated capabilities, identify the JROC validated source document.

Table X-X. Supported ICDs/JCDs and Related CDDs/CPDs

Capability	**CDD Contribution**	**Related CDDs**	**Related CPDs**	**Tier1& 2 JCAs**
ICD Capability Description #1 (Source Doc)	Brief description of the contribution made by this CDD	CDD Title	CPD Title	
ICD Capability Description #2 (Source Doc)	Brief description of the contribution made by this CDD	CDD Title	CPD Title	
JCD Capability (Source Doc)	Brief description of the contribution made by this CDD	CDD Title	CPD Title	

8. Information Technology and National Security Systems Supportability. For systems that receive or transmit information, provide an estimate of the expected bandwidth and quality of service requirements for support of the capability (on either a per-unit or an aggregate basis, as appropriate). For the CDD, this will be a very rough order-of-magnitude estimate derived from the initial ISP (full details will be derived from the associated or updated ISP for Milestone C and included in the CPD). This description must explicitly distinguish the IT and NSS support to be acquired as part of this program from IT and NSS support to be provided to the acquired system through other

systems or programs (reference s). Sponsor will identify the communities of interest (reference z) with which they are working to make the capability's data visible, accessible, and understandable to other users on the GIG.

9. Intelligence Supportability. Identify, as specifically as possible, all projected requirements for intelligence support throughout the expected acquisition life cycle in accordance with the format and content prescribed by reference y, unless a waiver has been granted by J-2. Contact J-2 Intelligence Requirements Certification Office (J2P/IRCO) for assistance (DSN 225-4693/8085, SIPRNET http://www.dia.smil.mil/intel/j2/j2p/irco/main.html or JWICS http://j2irco.dia.ic.gov/irco/open_docs.html).

10. Electromagnetic Environmental Effects (E3) and Spectrum Supportability. Define the electromagnetic spectrum requirements that the system must meet to assure spectrum supportability in accordance with reference v. Describe the electromagnetic environment in which the system will operate and coexist with other US, allied, coalition, government, and non-government systems. Identify potential operational issues regarding electromagnetic interference from threat emitters and from other E3 effects such as electromagnetic pulse. For spectrum-dependent systems, equipment spectrum certification is required to assure adequate access to the electromagnetic spectrum and sufficient availability of frequencies from host nations. Specifically address safety issues regarding hazards of electromagnetic radiation to ordnance (HERO), fuels (HERF), and personnel (HERP).

11. Assets Required to Achieve Initial Operational Capability (IOC). Describe the types and initial quantities of assets required to attain IOC. Identify the operational units (including other Services or government agencies, if appropriate) that will employ the capability, and define the initial asset quantities (including initial spares and training and support equipment, if appropriate) needed to achieve IOC.

12. Schedule and IOC and Full Operational Capability (FOC) Definitions. Define what actions, when complete, will constitute attainment of IOC and FOC of the current increment. Specify the target date for IOC attainment.

13. Other DOTMLPF and Policy Considerations. Discuss any additional DOTMLPF and policy implications associated with fielding the system that have not already been addressed in the CDD, to include those approaches that would impact CONOPs or plans within a combatant command's area of responsibility. Highlight the status (timing and funding) of the other DOTMLPF and/or policy considerations. Describe implications for likely changes to any aspect of DOTMLPF or policy. Discuss human systems integration (HSI) considerations that have a major impact on system effectiveness, suitability, and affordability. Describe, at an appropriate level of detail, the key logistics criteria, such as system reliability, maintainability, transportability, and

supportability that will help minimize the system's logistics footprint, enhance mobility, and reduce the total ownership cost. Detail any basing needs (forward and main operating bases, institutional training base, and depot requirements). Specify facility, shelter, supporting infrastructure, anti-tamper and environmental, safety and occupational health (ESOH) asset requirements, and the associated costs and availability milestone schedule that support the capability. Describe how the system(s) will be moved either to or within the theater. Identify any lift constraints.

14. Other System Attributes. As appropriate, address attributes that tend to be design, cost, and risk drivers, including ESOH, HSI, embedded instrumentation, electronic attack (EA), information protection standards and IA and wartime reserve mode (WARM) requirements. In addition, address conventional and initial nuclear weapons effects; nuclear, biological and chemical contamination (NBCC) survivability; natural environmental factors (such as climatic, terrain, and oceanographic factors); and unplanned stimuli (such as fast cook-off, slow cook-off, bullet impact, fragment impact, sympathetic detonation, and shape charge jet). Define the expected mission capability (e.g., full, percent degraded) in the various environments. Include applicable safety parameters, such as those related to system, nuclear, explosive, and flight safety. Identify physical and operational security needs. When appropriate, identify the weather, oceanographic and astrogeophysical support needs throughout the program's expected life cycle. Include data accuracy and forecast needs. For intelligence, surveillance, and reconnaissance (ISR) platforms, address information protection standards. Describe the non-IT/NSS capabilities required for allied and coalition operations, identify the potentially applicable US-ratified international standardization agreements, and provide an initial indication of which ones will be incorporated in the system requirements (references z and bb).

15. Program Affordability. The affordability determination is made as part of the cost assessment in the CBA. Cost will be included in the CDD as life-cycle cost or, if available, total ownership cost. It will include all associated system(s) DOTMLPF and policy costs. Inclusion of cost allows the sponsor to emphasize affordability in the proposed program. In addition, the discussion on affordability should articulate the CDD sponsor funding level estimates for developing, producing, and sustaining the desired capability. The cost figure should be stated in terms of a threshold and objective capability (not necessarily a KPP) to provide flexibility for program evolution and cost as an independent variable (CAIV) tradeoff studies. Cite applicable cost analyses conducted to date.

Mandatory Appendices

Appendix A. Net-Ready KPP Products. Include the required architecture framework view products developed from integrated architectures. Formatting instructions are provided in reference u.

- Mandatory
  - AV-1, OV-1, OV-2, OV-4, OV-5, OV-6C
  - SV-2, SV-4, SV-5, SV-6
  - TV-1 (Draft IT Standards Profile generated by the DOD IT Standards Registry (DISR) online)
  - Net Centric Operations Warfare Reference Model (NCOW-RM) Compliance Statement
  - NR-KPP statement
  - IA Statement of Compliance
  - Key Interface Profile (KIP) Declaration (list of KIPs that apply to system)
- As Applicable: OV-7, TV-2

Note: Include only those architectural views not presented in the document.

Note: The Joint Staff may waive the requirement for certain architecture views on a case-by-case basis based on the proposed JPD and presence or absence of a NR-KPP.

Appendix B. References

Appendix C. Acronym List

Other Appendices or Annexes. As required to provide supporting information not included in the body of the CDD.

ENCLOSURE G

CAPABILITY PRODUCTION DOCUMENT

1. General

a. The CPD is the sponsor's primary means of providing authoritative, testable capabilities for the Production and Deployment phase of an acquisition program. A CPD is finalized after design readiness review and is validated and approved before the Milestone C acquisition decision (see reference c for DOD space programs). Because a CPD is finalized after design readiness review and after the majority of capability development, it is normally not appropriate to introduce new requirements at this point. New requirements should be included in the next increment in an evolutionary program or in a future modification or upgrade if no additional increments are planned. The development of the CPD is guided by the integrated architectures; applicable JCDs, ICDs, and CDD; AoA and/or supporting analytical results; developmental and operational test results; and the design readiness review. The CPD must include a description of the DOTMLPF and policy impacts and constraints. The key documents associated with the CPD are identified in Table G-1.

b. The CPD captures the information necessary to support production, testing, and deployment of an affordable and supportable increment within an acquisition strategy. The CPD provides the operational performance attributes necessary for the acquisition community to produce a single increment of a specific system. It presents performance attributes, including KPP, to guide the production and deployment of the current increment. If the plan requires a single step to deliver the full capability, the KPPs will apply to the entire system(s). There may be cases where the validation authority decides it is appropriate to use a combined CPD to describe closely interdependent systems that provide the desired capability. Each increment must provide a safe, operationally effective, suitable, and useful capability in the intended environment, commensurate with the investment.

c. The CPD refines the threshold and objective values for performance attributes and KPPs that were validated in the CDD for the production increment. Each production threshold listed in the CPD depicts the minimum performance that the PM is expected to deliver for the increment based on the system design subsequent to the design readiness review. The refinement of performance attributes and KPPs is the most significant difference between the CDD and the CPD and is discussed further in paragraph 9 below.

Table G-1. CPD Linkage to Program Documents

Predecessor Documents and Information	Dependent Documents
JOpsC and CONOPs	Acquisition Strategy (updated for Milestone C)
Design Readiness Review (see reference c for DOD space programs)	APB for Milestone C of the current increment
System Threat Assessment	Clinger-Cohen Certification for MAIS (updated for Milestone C)
ISP (from Milestone B)	DD Form 1494 (required to obtain spectrum certification)
AoA Report	Test and Evaluation Master Plan (updated for Milestone C)
Completed automated standards profile as required in reference t	ISP (Updated for Milestone C)
JCDs and ICDs	Capability roadmap
CDD	System engineering plan
Integrated architectures	Manpower estimate
MUAs/final demonstration report for JCTD/ACTDs and qualified prototype projects	
Capability roadmap	

d. As in the CDD, care must be taken to stabilize and not overspecify attributes in the CPD. Only the most significant items should be designated as performance attributes with threshold and objective values. To provide the needed performance attributes, the PM will develop details in the technical documentation.

e. When the sponsor of a JCTD/ACTD, qualified prototype project, or quick-reaction technology project determines that the demonstration is complete and the capability is ready for immediate fielding for other than limited quantities, a CPD will be developed to support approval for production and fielding. The MUA, which is completed at the end of the JCTD/ACTD, qualified prototype project, or quick reaction technology project, will be used to support the development of the CPD. The CPD with the supporting MUA will then be submitted for staffing and approval prior to the Milestone C decision.

f. Each CPD applies to a single increment of a single system or SoS. When the CPD is part of an FoS approach, the CPD will identify the source ICD or other JROC-approved source document, AoA and/or supporting analyses results, and any related CDDs and/or CPDs that are necessary to deliver the required capability and to allow the required program synchronization.

g. For IT systems, a CPD will only be required with development costs of greater than $15 million that will be going through an independent operational test acceptance and a Milestone C decision (typically a MAIS program). Final interoperability certification for those systems without a CPD will be accomplished through the ISP approval process.

h. A sponsor may resubmit a CDD to be revalidated as a CPD in those cases where the CDD accurately reflects the performance of the system to be delivered at low-rate initial production. The sponsor will resubmit the CDD as an FCB Draft CPD into KM/DS. The lead FCB will determine if the CDD requires staffing and/or recertification (Joint Staff J-2/J-6) prior to making a recommendation to the JCB/JROC.

2. CPD Focus. The CPD may refine and revise the required operational capabilities that were listed in the CDD. When a CPD is based on a JROC-approved source document other than an ICD or CDD, the KPPs, KSAs, and other performance attributes will be based on analysis of the required capability. CPD KPPs must be inserted verbatim into the performance section of the acquisition strategy and the APB. MOE and suitability criteria developed for the TEMP and refined during the SDD phase are updated as necessary to support Milestone C and initial operational test and evaluation. The MOE and suitability criteria are based on validated performance criteria in the CPD (for DOD space programs, the TEMP is required for Key Decision Point C; see reference c).

3. CPD Development and Documentation

a. The CPD is finalized after completion of the design readiness review. The CPD is an entrance criteria item that is necessary for each Milestone C acquisition decision (see reference c for DOD space programs).

b. The CPD sponsor will apply lessons learned during the SDD phase, lessons learned from previous increments, risk reduction activities, MUAs (for JCTD/ACTDs, qualified prototype projects, and quick-reaction technology projects), experimentation, test and evaluation, modeling and simulation, capability and schedule tradeoffs and affordability analysis in the delivery of the CPD capabilities. The previously defined KPPs may be refined (with a rationale provided) and should be tailored to the proposed system to be procured (e.g., range, probability of kill, platform survivability, timing of the need).

c. The CPD sponsor, in coordination and collaboration with the appropriate DOD components, agencies, FCB, and applicable JCD leads, will prepare the CPD. Continuous collaboration with the systems acquisition PM is essential. The CPD sponsor also will collaborate with sponsors of related CDDs and/or CPDs that are required in FoS and SoS solutions, particularly those generated from a common ICD. The CPD will include a description of the operational capability; threat; IT and NSS supportability; links to all applicable integrated architectures; required capabilities; program support; supportability; force structure; DOTMLPF and policy impact and constraints; and schedule and program affordability for the system (revised from the CDD).

d. CPD development should leverage off related analysis and development with the associated ISP required by reference s. As required capabilities are developed, the output from the information needs discovery process (reference s) should help develop the required architecture products and to identify the elements of required program support for inclusion in the CPD.

e. Draft and approved CPDs, both classified and unclassified, should be carefully marked to indicate whether the document is releasable to allies, industry, or the public. Early collaboration should be encouraged whenever possible.

f. CPD format and detailed content instructions are provided at Appendix A of this enclosure.

4. CPD Validation and Approval. The Gatekeeper, described in Enclosure C, will assign a JPD to each CPD. The JPD determines the validation and approval authorities for the CPD. Delegation of approval authority will not normally be granted beyond a single increment in an evolutionary acquisition.

5. Certifications and Weapon Safety Endorsement. JROC Interest CPDs will receive applicable intelligence and IT and NSS interoperability and supportability certifications (in accordance with Enclosure C) prior to JROC validation. Joint Integration CPDs also will receive the applicable certifications before they are returned to the sponsoring component for validation and approval. All weapon-related CPDs will receive a weapon safety endorsement.

6. Formal CPD Staffing. The first step in obtaining validation and approval is the formal review of the document. The staffing process is described in Enclosure C. Supporting documentation, such as the AoA results, ICD, CDD, and any additional previously approved documents should be made available electronically for inclusion in the package. If an AoA has not been conducted, an explanation and an electronic copy of whatever alternative analysis has been performed (or planned) will be made available or attached.

7. CPD Review and Approval. A CPD is written, validated, and approved after the design readiness review to support the Milestone C decision for each

production increment. Unlike the CDD, the CPD is always specific to a single production increment and is normally not updated.

8. CPD Publication and Archiving. Approved CPDs (SECRET and below), regardless of JPD, will be posted to the KM/DS tool so that all JCIDS documents are maintained in a single location.

9. System Capabilities. The CPD identifies, in threshold/objective format, the specific attributes that contribute most significantly to the desired operational capability. The focus of these attributes is fundamentally different from that of the attributes provided in the CDD. The CDD values were used to guide the acquisition community in making tradeoff decisions between the threshold and objective levels of the stated attributes. After design readiness review, these tradeoff decisions have been made and a more precise determination of acceptable performance can be stated in the CPD. A range of expected performance, provided by the PM, is specified in the production threshold and objective values for each attribute or KPP.

a. The production threshold and objective values specified for the attributes in the CPD may be refinements of the development threshold and objective values documented in the CDD. Each production threshold value listed in the CPD represents the minimum performance that the PM is expected to deliver for the increment based on the post design readiness review.

b. Each production threshold value may be adjusted, as required, to account for post-design readiness review estimates and for manufacturing, technical, and other risks. KPP, KSA, and other performance attribute threshold values in the CPD are generally expected to be equal to or better than the corresponding CDD threshold values. However, there may be cases where CDD KPP, KSA, and/or non-KPP threshold values are reduced in a CPD. When this occurs, the following questions must be answered in the CPD:

(1) Will the capability still provide sufficient operational effectiveness as defined in the source ICD?

(2) If the new capability will replace a fielded capability, will it still provide equal or better overall operational effectiveness than the fielded capability?

(3) Is this proposal still a good way to close the capability gap, or should this approach be abandoned in favor of another materiel or non-materiel alternative?

(4) How will the reduced capability impact on related CDDs and/or CPDs and fielded systems?

c. Additionally, when a CDD KPP threshold is lowered in a CPD, the validation authority must be briefed on the answers to these questions before the CPD is approved. Components will budget sufficient funds to achieve all stated production thresholds, as a minimum.

d. In evolutionary acquisition, it is expected that the overall operational effectiveness of a system will improve between increments. This can be realized by increasing threshold values of some or all of the fielded attributes and/or by adding new attributes to a fielded capability. A decrease in KPP or non-KPP thresholds to accommodate the introduction of an additional capability is not normally desired. However, there can be cases where this is acceptable as long as the overall operational effectiveness is improved.

e. The production objective value is the desired operational goal for an attribute or KPP in the current increment, beyond which any gain in military utility for the increment does not warrant additional expenditure.

10. Key Performance Parameters. The CPD will contain all of the KPPs that capture the attributes needed to achieve the required capabilities and should be consistent with the KPPs specified in the CDD. In modifying the KPPs and their values, the sponsor will leverage the expertise of the operational users and the acquisition community. Guidance on the development of KPPs is provided in Enclosure B.

a. CPD KPPs are inserted verbatim into the performance section of the APB. KPPs will be developed relating to each of the characteristics of the future joint force as identified in the CCJO when the system contributes to those capabilities. A NR-KPP will be developed for all IT and NSS that are used to enter, process, store, display, or transmit DOD information, regardless of classification or sensitivity, except those that do not communicate with external systems, including Automated Information Systems in accordance with references r, s, and t. Force protection and survivability KPPs are mandatory for any manned system or system designed to enhance personnel survivability when the system may be employed in an asymmetric threat environment. A sustainment KPP is mandatory for all JROC Interest CPDs. If the sponsor determines that any of the mandatory KPPs do not apply, the sponsor will provide justification in the CPD.

b. The CPD should document how the CPD's KPPs are responsive to applicable JCD capabilities and key metrics. For JCDs to be effective, it is essential that all JCD sponsors review all related JROC Interest and Joint Integration CDDs and CPDs for applicability to their JCD. This support is important because CDD and CPD authors cannot in all cases be expected to understand the full impact and scope of every JCD.

APPENDIX A TO ENCLOSURE G

CAPABILITY PRODUCTION DOCUMENT FORMAT

CLASSIFICATION OR UNCLASSIFIED

CAPABILITY PRODUCTION DOCUMENT
FOR
TITLE

Increment: _____

ACAT: _____

Validation Authority: _____

Approval Authority: _____

Milestone Decision Authority: _____

Designation: JROC Interest/Joint Integration/Joint Information/Independent

Prepared for Milestone C Decision (or specify other acquisition decision point)

Date

Note: Each subparagraph should be numbered to facilitate correlation and traceability and for ease of identifying issues during staffing. CPDs must be submitted in Microsoft Word (6.0 or greater) format. Provide the SV-6 as a separate file in Microsoft Excel format for ease of importation into analysis tools. All CPDs must be clearly labeled with draft version number, increment, and date and must include any caveats regarding releasability, even if unclassified. The intent is to share CPDs with allies and industry wherever possible at an appropriate time in the acquisition process. Draft documents will be submitted with line numbers displayed. Integrated architecture products will be embedded in the Microsoft Word file for ease of review during the staffing process. Ideally, the body of the CPD should be no more than 30 pages long.

Executive Summary (2 pages maximum)

Table of Contents (with list of tables, figures and appendices)

Points of Contact

1. Capability Discussion. Cite the applicable ICD and CDD (if applicable) and/or MUAs and provide an overview of the capability gap in terms of relevant range of military operations and timeframe under consideration. Describe the capability that the program delivers and how it relates to the characteristics of the future joint force identified in the CCJO, CONOPs, and integrated architectures. Discuss how the current increment contributes to the required capability. The capability must be defined using the common lexicon for capabilities established in the JCAs.

a. Discuss the operating environment of the system. Address how the capability will be employed on the battlefield and where it will be employed and/or based.

b. If the CPD is part of an FoS or SoS solution, discuss the source JCD or ICD and the related CDDs, CPDs, integrating DOTMLPF and policy changes and required synchronization.

c. Cite any additional previously approved JCIDS documents pertaining to the proposed system.

d. Identify the JCAs (Tier 1 and 2) in which the capabilities being delivered through this CDD contribute to directly.

2. Analysis Summary. Summarize all analyses (i.e., AoA and/or other support analysis) conducted to determine the system attributes and to identify the KPPs. Include the alternatives, objective, the criteria, assumptions, recommendation, and conclusion. A description of the analysis methodology and the analysis results shall be included in an appendix.

3. CONOPs Summary. Describe the relevant part of the JOpsC, CONOPs, and/or UCP-assigned mission this capability contributes to, what operational outcomes it provides, what affects it must produce to achieve those outcomes, how it complements the integrated joint warfighting force, and what enabling capabilities are required to achieve its desired operational outcomes.

4. Threat Summary. Summarize the projected threat environment and the specific threat capabilities to be countered. Include the nature of the threat, threat tactics, and projected threat capabilities (lethal and nonlethal) over time. Programs designated as ACAT ID (or potential ACAT ID) must incorporate DIA-validated threat references. All other programs may use Service intelligence center-approved products and data. Summarize the organizational resources that provided threat support to capability development efforts. Contact the DIA's Defense Warning Office, Acquisition Support Division for assistance (DSN: 428-4521; SIPRNET: http://www.dia.smil.mil/admin/di/dwo/POC.shtml or JWICS: http://www.dia.ic.gov/admin/di/dwo/Link.shtml).

5. Program Summary. Provide a summary of the overall program strategy for reaching full capability and the relationship between the production increment addressed by the current CPD and any other increments of the program.

6. System Capabilities Required for the Current Increment

a. Provide a description for each attribute and list each attribute in a separately numbered subparagraph. Include a supporting rationale for the requirement and cite any analytic references. When appropriate, the description should include any unique operating environments for the system.

If the CPD is part of an SoS solution, it must describe the attributes for the SoS level of performance and any unique attributes for each of the constituent systems.

b. Present each attribute in output-oriented, measurable, and testable terms. For each attribute, provide production threshold and objective values. The PM can use this information to provide incentives for the production contractor to enhance performance through production improvements.

c. Provide tables summarizing specified KPPs and additional performance attributes in threshold-objective format, as depicted below. For each KPP, identify the characteristics of the future joint force as identified in the CCJO. Also provide a general discussion of the additional performance attributes.

CCJO characteristics	**Key Performance Parameter**	**Production Threshold**	**Production Objective**
	KPP 1	Value	Value
	KPP 2	Value	Value
	KPP 3	Value	Value

Table X.X. Example Key Performance Parameter Table

CCJO characteristics	**Key System Attributes**	**Production Threshold**	**Production Objective**
	KSA 1	Value	Value
	KSA 2	Value	Value
	KSA 3	Value	Value

Table X.X. Example Key System Attributes Table

Attribute	**Production Threshold**	**Production Objective**
Attribute	Value	Value
Attribute	Value	Value
Attribute	Value	Value

Table X.X. Additional Attributes

d. For weapon programs, the joint operating environment attributes and performance parameters must be addressed as the basis for the weapon safety endorsement. Identify, as specifically as possible, all projected requirements necessary to provide for safe weapon storage, handling, transportation, or use by joint forces throughout the weapon life cycle, to include required performance and descriptive, qualitative, or quantitative attributes.

e. Develop the CPD NR-KPP, in accordance with the procedures described in references r, s, and t, from the integrated architecture. Force protection and survivability KPPs are mandatory for any manned system or system designed to enhance personnel survivability when the system may be employed in an asymmetric threat environment. A sustainment KPP is mandatory for all JROC Interest CPDs.

f. If the sponsor determines that any of the mandatory KPPs do not apply, the sponsor will provide justification.

7. FoS and SoS Synchronization. In FoS and SoS solutions, the CPD sponsor is responsible for ensuring that related solutions, specified in other CDDs and CPDs, remain compatible and that the development is synchronized. These related solutions should tie to a common ICD. The CPD sponsor is also responsible for ensuring that the CPD accurately captures the desired capabilities described in applicable JCDs.

a. Discuss the relationship of the system described in this CPD to other systems contributing to the capability(ies). Discuss any overarching DOTMLPF and policy changes that are required to make the FoS and/or SoS an effective military capability.

b. Provide a table that briefly describes the contribution this CPD makes to the capabilities described in the applicable ICDs and the relationships to CDDs and CPDs that also support these capabilities. For these interfaces to be effective, it is essential the CPD sponsor review all related JROC Interest and Joint Integration ICDs, CDDs, and CPDs for applicability to the FoS or SoS addressed by this CPD. Also identify the primary JCAs (Tier 1 and 2) supported by this CPD. If the CPD is not based on JCD or ICD validated capabilities, identify the JROC validated source document.

Table X-X. Supported ICDs or JCDs and Related CDDs or CPDs

Capability	**CPD Contribution**	**Related CDDs**	**Related CPDs**	**Tier 1&2 JCAs**
ICD Capability Description #1 (Source Doc)	Brief Description of the Contribution Made by this CPD	CDD Title	CPD Title	
ICD Capability Description #2 (Source Doc)	Brief Description of the Contribution Made by this CPD	CDD Title	CPD Title	
JCD Capability (Source Doc)	Brief Description of the Contribution Made by this CPD	CDD Title	CPD Title	

8. IT and NSS Supportability. For systems that receive or transmit information, provide an estimate of the expected bandwidth and quality of service requirements for support of the system(s) (on either a per-unit or an aggregate basis, as appropriate). The estimate provided in the CPD should be derived from the ISP updated for Milestone C and a significant improvement over the rough-order-of-magnitude estimate provided in the CDD. This description must explicitly distinguish IT and NSS support to be acquired as part of this program from the IT and NSS support to be provided to the acquired system through other systems or programs (reference s). The sponsor will identify the communities of interest (reference z) with which he or she is working to make the capability's data visible, accessible, and understandable to other users on the GIG.

9. Intelligence Supportability. Identify, as specifically as possible, all projected requirements for intelligence support throughout the expected acquisition life cycle in accordance with the format and content prescribed by reference y unless a waiver has been granted by J-2. Contact J-2 Intelligence Requirements Certification Office (J2P/IRCO) for assistance (DSN 225-4693/8085, SIPRNET http://www.dia.smil.mil/intel/j2/j2p/irco/main.html or JWICS http://j2irco.dia.ic.gov/irco/open_docs.html).

10. E3 and Spectrum Supportability. Define the electromagnetic spectrum requirements that the system must meet to assure spectrum supportability in accordance with reference v. Describe the electromagnetic environment in which the system will operate and coexist with other US, allied, coalition, and non-government systems. Identify potential operational issues regarding electromagnetic interference from threat emitters and from other E3 effects such as electromagnetic pulse. For spectrum-dependent systems, equipment spectrum certification is required to assure adequate access to the electromagnetic spectrum and sufficient availability of frequencies from host nations. Specifically address safety issues regarding HERO, HERF, and HERP.

11. Assets Required to Achieve FOC. Describe the types and quantities of assets required to attain FOC. Identify the operational units (including other Services or government agencies, if appropriate) that will employ the capability and define the asset quantities (including spares, training, and support equipment, if appropriate) required to achieve FOC.

12. Schedule and IOC and FOC Definitions. Define the actions that, when complete, will constitute attainment of IOC and FOC for the current increment. Specify the target date for IOC attainment.

13. Other DOTMLPF and Policy Considerations. Discuss any additional DOTMLPF and policy implications associated with fielding the system that have not already been addressed in the CPD, to include those approaches that would impact CONOPs or plans within a combatant command's area of

responsibility. Discuss HSI considerations that have a major impact on system effectiveness, suitability, and affordability. Describe, at an appropriate level of detail, the key logistics criteria, such as system reliability, maintainability, operational availability, and supportability, that will help minimize the system's logistics footprint, enhance its mobility, and reduce the total ownership cost. Detail any basing needs (forward and main operating bases, institutional training base, and depot requirements). Specify facility, shelter, supporting infrastructure, ESOH asset requirements, and the associated costs and availability milestone schedule that support the capability or system. Describe how the system will be moved either to or within the theater. Identify any lift constraints.

14. Other System Attributes. As appropriate, address attributes that tend to be design, cost, and risk drivers, including ESOH, HSI, embedded instrumentation, EA, IA, and WARM requirements. In addition, address conventional and initial nuclear weapons effects; NBCC survivability; natural environmental conditions (such as climatic, terrain, and oceanographic factors); and unplanned stimuli (such as fast cook-off, slow cook-off, bullet impact, fragment impact, sympathetic detonation, and shaped-charge jet). Define the expected mission capability (e.g., full, percent degraded) in the various environments. Include applicable safety parameters, such as those related to system, nuclear, explosive, and flight safety. Identify physical and operational security needs. When appropriate, identify the weather, oceanographic, and astrogeophysical support needs throughout the program's expected lifecycle. Include data accuracy and forecast needs. For ISR platforms, address information protection standards.

15. Program Affordability. The affordability determination is made as part of the cost assessment in the CBA. Cost will be included in the CPD as life-cycle cost. The cost will include all associated DOTMLPF and policy costs. Inclusion of cost allows the DOD component sponsor to emphasize affordability in the proposed program. In addition, the discussion on affordability should articulate the CPD sponsor's estimates of the appropriate funding level for developing, producing, and sustaining the desired capability. The cost figure should be stated in terms of a threshold and objective capability (not necessarily a KPP) to provide flexibility for program evolution and CAIV tradeoff studies. Cite applicable cost analyses conducted to date.

Mandatory Appendices

Appendix A. Net-Ready KPP Products. Include the required architecture framework view products developed from integrated architectures. Formatting instructions are provided in reference u.

- Mandatory:
  - AV-1, OV-1, OV-2, OV-4, OV-5, OV-6C

- SV-2, SV-4, SV-5, SV-6
- TV-1 (Final IT Standards Profile generated by the DISRonline), TV-2
- NCOW-RM Compliance Statement
- NR-KPP statement
- IA Statement of Compliance
- KIP Declaration (list of KIPs that apply to the system)

- When applicable: OV-7 and SV-11

Note: Include only those architectural views not presented in the document.

Note: The Joint Staff may waive the requirement for certain architecture views on a case-by-case basis based on the proposed JPD and presence or absence of a NR-KPP.

Appendix B. References

Appendix C. Acronym List

Other Appendices or Annexes. As required to provide supporting information not included in the body of the CPD.

(INTENTIONALLY BLANK)

ENCLOSURE H

JOINT DOTMLPF CHANGE RECOMMENDATION

1. Purpose. This enclosure describes the procedures and responsibilities for organizations involved in bringing joint DCRs to the JROC for consideration.

a. This guidance applies to DOTMLPF changes that are outside the scope or oversight of a new defense acquisition program.

b. The procedures outlined in this enclosure may also be used for processing DCRs that require additional numbers of commercial or nondevelopmental items produced or deployed via the Defense Acquisition System. Additionally, these procedures may be used to support increasing quantities of existing items or commodities (e.g., increases to manpower, operational tempo, spare parts, fuel supply, recruiting) to meet an established operational need.

c. Joint DCRs may be submitted to:

(1) Change, institutionalize, or introduce new joint DOTMLPF and policy resulting as an output of joint experimentation, lesions learned, or other assessments to meet operational needs.

(2) Change, institutionalize, or introduce new joint DOTMLPF and policy resulting from the FSA but outside the scope or oversight of a new defense acquisition program.

(3) Request additional numbers of existing commercial or non-developmental items previously produced or deployed in addition to other considerations of DOTMLPF.

(4) Introduce existing non-materiel solutions available from other DOD, US interagency, or foreign sources.

d. Joint DCRs may not be submitted to justify out-of-cycle budget requests.

2. Procedures -- Integrating Joint DCRs Into the JROC Process

a. Generating Joint DCRs. Recommendations for joint DOTMLPF and policy changes may be received from a variety of sources including, but not limited to:

(1) Joint and Service experimentation;

(2) Assessments by FCBs, battle laboratories, JROC-directed special study groups, combatant commanders, Services, Joint Staff, OSD, and Defense agencies;

(3) Review of existing JCDs, ICDs, CDDs, and CPDs;

(4) An FSA; or

(5) Combatant commanders' issues collection and prioritization, technology demonstrations, warfighting lessons learned, and exercises.

b. Joint DOTMLPF Definitions. Joint DCRs should categorize their recommendations using the following definitions of the elements of DOTMLPF:

(1) Joint Doctrine. Fundamental principles that guide the employment of US military forces in coordinated action toward a common objective. Though neither policy nor strategy, joint doctrine serves to make US policy and strategy effective in the application of US military power. Joint doctrine is based on extant capabilities. Joint doctrine is authoritative guidance and will be followed except when, in the judgment of the commander, exceptional circumstances dictate otherwise (reference gg).

(2) Joint Organization. A joint unit or element with varied functions enabled by a structure through which individuals cooperate systematically to accomplish a common mission and directly provide or support joint warfighting capabilities. Subordinate units and elements coordinate with other units and elements and, as a whole, enable the higher-level joint unit or element to accomplish its mission. This includes the joint staffing (military, civilian, and contractor support) required to operate, sustain, and reconstitute joint warfighting capabilities.

(3) Joint Training. Military training based on joint doctrine or joint tactics, techniques, and procedures to prepare joint forces and/or joint staffs to respond to strategic and operational requirements deemed necessary by combatant commanders to execute their assigned missions. Joint training involves forces of two or more Military Departments interacting with a combatant commander or subordinate joint force commander; involves joint forces and/or joint staffs; and is conducted using joint doctrine or joint tactics, techniques, and procedures.

(4) Joint Materiel. All items (including ships, tanks, self-propelled weapons, aircraft, etc., and related spares, repair parts, and support equipment, but excluding real property, installations, and utilities) necessary to equip, operate, maintain, and support joint military activities without distinction as to its application for administrative or combat purposes.

(5) Joint Leadership and Education. Professional development of the joint leader is the product of a learning continuum that comprises training, experience, education, and self-improvement. The role of joint professional military education is to provide the education needed to complement training, experience, and self-improvement to produce the most professionally competent individual possible.

(6) Joint Personnel. The personnel component primarily ensures that qualified personnel exist to support joint capabilities. This is accomplished through synchronized efforts of joint force commanders and Service components to optimize personnel support to the joint force to ensure success of ongoing peacetime, contingency, and wartime operations.

(7) Joint Facilities. Real property consisting of one or more of the following: a building, a structure, a utility system, pavement, and underlying land. Key facilities are selected command installations and industrial facilities of primary importance to the support of military operations or military production programs. A key facilities list is prepared under the policy direction of the Joint Chiefs of Staff.

c. Format Standards. Joint DCR documents will be uniform across all DOD organizations. A sample template to assist in preparing recommendations is found in Appendix A to this enclosure.

d. Submitting Recommendations. Recommendations for joint DOTMLPF and policy changes are prepared in accordance with the above paragraph and submitted to the Joint Staff through KM/DS in accordance with the procedures in Enclosure C. The document will be the DOD component flag-level coordinated position and will be forwarded with a cover letter identifying the document, date, any schedule drivers, and a working-level point of contact. All documents entering the review process are considered draft and do not require a formal signature until after JROC consideration.

3. Formal Change Recommendation Review Process. Once a document enters the formal JROC review process, it will be staffed to all combatant commanders, Services, Joint Staff, OSD, and Defense agencies for review, endorsement, and comment.

a. Flag Review and FPO Assessment

(1) Joint Staff/J-8 JCD will review and verify the format for accuracy and completeness. J-8 will staff the draft document via KM/DS for combatant commanders, Services, Joint Staff, OSD, and appropriate Defense agency flag review.

(2) FPOs will provide an assessment of their specific functional process during their review of proposed joint DCRs during document staffing.

b. JROC Briefing and Schedule. Briefings for the FCB, JCB, and JROC will be prepared in accordance with reference aa.

c. JROC Recommendation to the Chairman. The JROC Secretary will consolidate the JROC's recommendations (including the recommended lead Military Department, combatant command, or Defense agency) and forward a JROCM endorsing the joint DCR along with the sponsor's change recommendation to the Chairman for approval.

4. Implementation of Joint DCRs. The progress of the implementation of joint DCRs will be tracked through a process supported by the Joint Transformation Integration System (JTIS). JTIS will be used to track all actions associated with the implementation of joint DCRs and their current status. A quarterly JTIS Review meeting will be scheduled with the JCB to review the status of outstanding joint DCRs within JTIS and serve as the executive oversight committee for their implementation. Issues that cannot be resolved by the JCB may be elevated to the JROC for resolution.

a. Implementation Overview. Joint DCRs that have been approved for implementation by the JROC will be assigned to the JCB, chaired by the Joint Staff Director, J-8 (DJ-8) for oversight and monitoring of co-evolution and implementation. The JCB provides substantive oversight of DOTMLPF actions to ensure that implementation activities within each of the seven critical considerations remain focused on achieving the integrated result described in the recommendation. The DJ-8 and the Joint Staff DOTMLPF FPOs share in the implementation of an approved recommendation. In cases where the JROC appoints a sponsor, the FPOs and DJ-8 would support this sponsor in its effort to co-evolve the joint DCRs. The DJ-8, the respective joint DOTMLPF FPOs, and the sponsor will work together to create an implementation plan and timeline. The key implementation tasks identified in the approved recommendation serve as a starting point for this plan and timeline. The DJ-8, in coordination with the joint DOTMLPF FPOs, will ensure that each task is completed in accordance with the timeline and provide status and visibility into the process to senior leaders. The DJ-8, in coordination with the FPOs, also makes recommendations to the JCB for modifications to existing timelines based on the synchronization of tasks. The Joint Staff DOTMLPF FPOs are responsible for coordinating assigned tasks via their existing processes and for providing periodic updates on their progress to the DJ-8 and the JCB. These recommendations, along with the status of all ongoing implementation activities, are provided to the JCB at regularly scheduled sessions. If unresolved issues occur, the JCB will seek JROC guidance for resolution.

b. Implementation Management

(1) Management Architecture

(a) Director, Joint Staff/J-8. The DJ-8 is the CJCS Executive Agent and primary Joint Staff proponent for implementation and system integration. This role includes responsibility for implementation policy and overall program management as well as monitoring the implementation of recommendations for the JCB.

(b) USJFCOM. The Secretary of Defense has designated USJFCOM as the "Executive Agent for Joint Warfighting Experimentation within the CJCS program to implement future warfighting visions." USJFCOM "is responsible to the Chairman of the Joint Chiefs of Staff for creating and refining future joint warfighting concepts and integration of Service efforts in support of future CJCS joint warfighting visions."

(c) Joint Requirements Oversight Council. The JROC charters and oversees the work of FCBs in developing overarching joint operational, functional and integrating concepts for the joint mission areas during the joint concept development component of this process. Joint DCRs resulting from joint concept development, joint experimentation, and assessment are integrated into the JROC's deliberations on identifying, developing, validating, and prioritizing joint capabilities.

(d) Joint DOTMLPF FPOs. Directors so designated are responsible for the execution of their respective joint functional process to meet the implementation of the recommended changes to joint DOTMLPF. FPOs will provide assessment of their specific functional process during their review of proposed joint DCRs. They will support the JCB and the DJ-8 in executing their integration and implementation responsibilities of approved joint DOTMLPF changes. The CJCS-designated joint DOTMLPF FPOs are listed in Figure H-1.

Critical Consideration	**DOTMLPF Functional Process Owners**
Joint Doctrine	Joint Staff/J-7
Joint Organizations	Joint Staff/J-8 (with J-1 & J-5 support)
Joint Training	Joint Staff/J-7
Joint Materiel	Joint Staff/J-8
Joint Leadership and Education	Joint Staff/J-7
Joint Personnel	Joint Staff/J-1
Joint Facilities	Joint Staff/J-4

Figure H-1. Joint Staff DOTMLPF FPOs

(e) DOTMLPF Action Review. Review of DOTMLPF actions will be conducted at the JCB. CSAs and combatant commands will be invited to address appropriate DOTMLPF and policy actions and implementation concerns. The JCB accepts the approved recommendations and assigns action for implementation for the Chairman. The JCB is a forum to monitor and coordinate the activities and events associated with implementing the approved joint DOTMLPF and policy actions.

(2) Joint DOTMLPF Implementation Rhythm. To successfully direct the joint DCR implementation process, a series of coordination meetings and briefings will be conducted periodically to ensure senior leadership is kept informed about the status of joint DCR implementation. This flow of information, through significant meetings and events, is considered the joint DOTMLPF implementation rhythm. Captured below are the events defined in terms of purpose and sponsorship.

(a) DOTMLPF Action Review. Quarterly update will be provided to the DJ-8, Service G/FO representatives, the USJFCOM G/FO representative and joint DOTMLPF FPOs. The purpose is to inform the DJ-8 and JCB of ongoing joint DOTMLPF activities and a forum to monitor and coordinate the activities and events associated with implementing the joint DCRs. It will provide status of approved joint DCR implementation and receive guidance and direction for future activities. DJ-8 is the sponsor.

(b) Roles and Responsibilities. Outlined below are the roles and responsibilities to support the implementation of joint DCRs.

1. Responsibilities Common to All Joint Staff J-Directorates. As a member of the Joint Staff, review all joint DCRs submitted to the Joint Staff/ J-8. Participate in the joint DOTMLPF implementation events as required.

2. Specific Roles and Responsibilities for Joint Staff Directorates

a. Joint Staff Director, J-1 (DJ-1). Acts as the joint DOTMLPF FPO for the implementation of the joint DOTMLPF critical consideration-personnel ("P") and the critical consideration-organization ("O") where joint manpower changes are being recommended. Supports the JROC and the DJ-8 in executing their integration and implementation responsibilities. Provide comments for the JROC of the "P" functional process during their review of proposed joint DCRs. Supports the J-8 in the evaluation of proposed joint manpower changes.

b. Joint Staff Director, J-4. Acts as the joint DOTMLPF FPO for the implementation of the joint DOTMLPF critical consideration joint facilities ("F"). Support the JROC and the DJ-8 in executing their integration and implementation responsibilities. Provide comments for the JROC of the "F" functional process during their review of proposed joint DCRs.

c. Joint Staff Director, J-5 (DJ-5). Supports the DJ-8 in the DOTMLPF FPO for the implementation of the joint DOTMLPF "O."

d. Joint Staff Director, J-7. Acts as the joint DOTMLPF FPO for the implementation of the joint DOTMLPF critical considerations of joint Doctrine ("D"), joint Training ("T"), and Leadership and Education ("L"). Provide comments for the JROC of "D," "T" and "L" functional processes during their review of proposed joint DCRs.

e. Joint Staff, Director, J-8

(1) Sponsors the DOTMLPF action review at the JCB.

(2) Acts as the CJCS representative to effect implementation and integration of all approved joint DCRs resulting from joint experimentation and assessments.

(3) Synchronizes joint DCR actions, establishes timelines, and tasks appropriate agencies to ensure co-evolution of joint DOTMLPF and policy.

(4) Serves as the coordinator with the joint DOTMLPF FPOs in the implementation of approved recommendations.

(5) Engages and informs senior leadership on current status of joint DOTMLPF and policy implementation activities and supporting efforts across the DOD.

(6) Acts as the joint DOTMLPF FPO for the implementation of the joint DOTMLPF critical consideration-materiel ("M") and "O" (with support from the DJ-1 and DJ-5). Provide comments for the JROC of the "M" and "O" functional process during their review of proposed joint DCRs.

(7) The J-8/DDFP will provide a safe weapons endorsement for weapons-related DCRs to ensure that safety attributes are understood in applying an existing weapon to a potentially new use or environment.

f. Joint Staff Roles and Responsibilities of Joint DOTMLPF FPOs

(1) Provide comments for the JROC of their specific functional process during the review of proposed joint DCRs.

(2) Work with the DJ-8 to construct an implementation plan and timeline for approved recommended joint DCRs.

(3) Execute assigned tasks to implement approved recommended changes to joint DOTMLPF and policy within their assigned areas of responsibility via the existing functional processes and data systems.

(4) Provide periodic status updates to the DJ-8, through the JCB, on the status of implementing approved changes to joint DOTMLPF and policy.

(5) Inform the DJ-8 promptly if any problems arise that may interfere with completion of assigned tasks.

g. Roles and Responsibilities of the FCBs

(1) Evaluate all joint DCRs assigned to their FCB as either lead or supporting, and incorporate the endorsements of the FPOs into their evaluation.

(2) Provide an endorsement recommendation to the JROC.

h. Roles and Responsibilities of Combatant Commands

(1) Participate in joint DOTMLPF implementation process.

(2) Evaluate proposed joint DCRs and provide recommendations on changes and approval.

(3) (USJFCOM) Submit the necessary joint DCR packages documentation and the results of joint experiments to the JROC.

i. Roles and Responsibilities of the Services

(1) Support the JCB with a permanent flag officer and working group representative. Designate a Service office of primary responsibility for joint DOTMLPF implementation.

(2) Participate in joint DOTMLPF implementation process.

j. Roles and Responsibilities of Defense Agencies. Participate in joint DOTMLPF implementation process.

k. Roles and Responsibilities of Office of the Secretary of Defense. Participate in joint DOTMLPF implementation process.

c. Resourcing Implementation. The Planning, Programming, Budgeting, and Execution System will be used to resource the approved joint DCRs. There are a variety of avenues available to combatant commands and the Joint Staff to influence the budget to resource those joint warfighting capabilities needed to achieve the joint force of the future.

APPENDIX A TO ENCLOSURE H

JOINT DOTMLPF CHANGE RECOMMENDATION FORMAT

Joint DOTMLPF Change
Recommendation for _____ (title)

Proposed Lead Agency is _____

Submitted by _____ (sponsor)

Date

Note: Each subparagraph should be numbered to facilitate correlation and traceability and for ease of identifying issues during staffing. DCRs must be submitted in Microsoft Word (6.0 or greater) format. All DCRs must be clearly labeled with draft version number, increment, and date and must include any caveats regarding releasability, even if unclassified. The intent is to share DCRs with allies and industry wherever possible at an appropriate time in the acquisition process. Draft documents will be submitted with line numbers displayed. Integrated architecture products will be embedded in the Microsoft Word file for ease of review during the staffing process.

Executive Summary (2 pages maximum)

Table of Contents (with list of tables, figures, and appendices)

Points of Contact

1. Purpose. Provide a brief statement regarding the concept(s) addressed in this document.

2. Background. Frame the discussion by providing context. Briefly discuss the existing concepts, technologies, procedures, etc., to be influenced by the proposal in terms of opportunities to enhance or improve joint and/or multinational warfighting capabilities. Within the discussion, include the following (as applicable):

a. References to latest DOD strategic guidance or plans.

b. National Military Strategy, Joint Programming Guidance, Strategic Planning Guidance, Joint Intelligence Guidance, Service investment plans, etc.

c. The military task from the UJTL (reference cc) associated with the proposal.

d. Published JROCMs relevant to the proposal, including linkage to JROC-approved operational concept(s) and architectures.

e. Combatant commander's integrated priorities list, joint monthly readiness reviews, quarterly reports to the Secretary of Defense, approved capabilities documents, etc., that validate the requirement to change joint DOTMLPF.

f. Other key decisions or events.

3. Description. Describe specifics of the proposal; address "who," "what," "when," "how," and "why." Clearly state, in terms of major objectives, what the recommendation is intended to accomplish and how it could widen the qualitative superiority of joint forces over potential adversaries, close a capability gap (existing or projected) or otherwise enhance joint warfighting capabilities. Also include discussion of the following, as applicable:

a. Changes to tactics, techniques, and procedures and/or implications on the safe use of the proposed solution in the proposed operating environment.

b. Forces and systems affected and impact on interoperability.

c. Projected threat environment based on a DIA-validated threat.

d. If recommendation includes incorporating future technology (materiel component), include brief discussion of the maturity of the science and technology area(s) or future systems involved and a risk assessment of the approach.

4. Analysis Process. Provide an executive summary of the analysis methodology that led to these recommendations, including:

a. Research, experimentation, and/or analysis plan.

b. Brief summary of the analytic techniques employed (i.e., modeling and simulation, statistical sampling, experimentation, real-world event lessons learned) to produce findings.

c. Discussion of facts and circumstances relating to adjustments made during execution of the approved research, experimentation, and/or analysis plan (if applicable).

d. Identify which Tier 1 and Tier 2 JCAs are supported by this DCR.

NOTE: Include full description of analysis methodology as an attachment to the change recommendation.

5. Joint DCR Findings and Proposed Implementation Plan. Use this section to describe research, experimentation, and analysis findings, and the recommended implementation plan. List recommendations and implementation plans in terms of each applicable joint DOTMLPF element.

a. List recommendations in priority order.

b. For each recommendation, include:

(1) Discussion of improvement and/or benefit to joint warfighting and joint interoperability.

(2) Whether or how DCR would advance CCJO-desired operational capabilities.

c. Proposed implementation timeframe:

(1) Discussion of relationships between recommendations and associated implementation timing (i.e., a joint organizational change has implications for a personnel change, which influences training plans).

(2) Resources required to implement (total resources, including additional research, hardware, DOD manpower, test range time, contractor support, etc.).

(3) Rough-order-of-magnitude total cost using template below, including cost by FY and type of funding (RDT&E, O&M, procurement) required (also, note paragraph 6, "Constraints," below).

DOTMLPF Change Recommendation	**FY xx (e.g. 08)**	**FY xx (e.g. 09)**	**FY xx (e.g. 10)**	**FY xx (e.g. 11)**	**FY xx (e.g. 12)**	**FY xx (e.g. 13)**	**FYDP Total**
Resources ($K)							
O&M							
RDT&E							
Procurement							
Manpower							
Total Funding							

Figure H-A-1. Summary of Resources Required to Implement (e.g., Doctrine) Change Recommendation Proposal

6. Constraints. Identify current or projected resource constraints with respect to implementing any element of the recommended findings in paragraph 5 above.

a. Highlight any proposed concept not currently addressed within the DOD program.

b. If specific recommendation is, for example, a change to joint training, and sufficient resources are already programmed to cover the total cost of implementing the proposal including course development, instructor staffing and/or billets, instructor education, training facilities, reading materials, hardware, and mock-ups, etc., then do not include in paragraph 6.

c. If there are additional unprogrammed costs associated with implementing any of the recommendations, include in paragraph 6.

d. For each joint DCR included in this paragraph, provide the following:

(1) Rough order of magnitude cost (total over the FYDP and by FY);

(2) Proposed resources required (RDT&E, O&M, procurement, billets, and/or manpower, etc.);

(3) Potential sources for funding.

7. Policy

a. Identify any DOD policy issues that would prevent the effective implementation of the recommended changes.

b. Identify the specific policy and the reason the proposed changes cannot comply with it.

c. Provide proposed changes to the policy.

d. Identify other potential implications from the changes in policy.

8. Issues

a. Identify any issues (DOD treaties, protocols, agreements, legal issues, DOD roles, missions and functions, interagency, multinational, etc.) associated with implementing any element of the recommended findings in paragraph 5.

b. Provide proposed resolution.

c. Identify interoperability implications.

d. Identify any unresolved combatant command, Service, Joint Staff, OSD, and/or Defense agency issues resulting from staffing and/or coordinating the recommendation document.

e. Critical and substantive comments must be addressed.

9. Recommendation Summary

a. Recap the major findings and proposed implementation recommendations to advance future joint warfighting capabilities.

b. List alternative approaches and/or options to implement and resource recommendations, in relative order of priority. (Options are particularly appropriate when comprehensive DCRs are submitted with significant resource implications. However, DCRs without alternatives may be submitted when only one option is appropriate or practical.) As appropriate, alternatives will be tailored to the specific DCRs and focused on maximizing, for example:

(1) Scope

(a) All forces and/or systems.

(b) All forces and/or systems within a particular specialty.

(c) Specific performance of a subset of forces within a specialty or system.

(2) Implementation schedule

(a) Maximum impact achieved at earliest practical date.

(b) Impact achieved in phases.

(3) Additional level of resources required (combined scope and schedule)

(a) Comprehensive approach.

(b) Moderate.

(c) Limited.

(4) Recommended changes to DOD policy to effect the changes

c. Include a brief discussion of advantages and risks and/or disadvantages of each alternative.

10. Package Disposition

a. Provide the JROC an overall recommended option or way ahead.

b. Identify proposed lead combatant command, Service and/or Defense agency as required.

ENCLOSURE I

REFERENCES

a. CJCSI 3170.01 series, "Joint Capabilities Integration and Development System"

b. DODI 5000.2, 12 May 2003, "Operation of the Defense Acquisition System"

c. National Security Space Acquisition Policy 03-01, 6 October 2003, "Guidance for DOD Space System Acquisition Process"

d. JROCM 100-05, 16 May 2005, "Modifications to the Operation of the Joint Capabilities Integration and Development System (JCIDS)"

e. JROCM 102-05, 20 May 2005, "Safe Weapons in Joint Warfighting Environments"

f. JROCM 120-05, 13 June 2005, "Policy for Updating Capabilities Documents to Incorporate Force Protection and Survivability KPP(s)"

g. JROCM 062-06, 17 April 2006, "Modifications to the Operation of the Joint Capabilities Integration and Development System"

h. JROCM 161-06, 17 August 2006, "JROC Way Ahead: KPP Study Recommendations and Implementation"

i. JROCM 163-06, 17 August 2006, "Modifications to the Comment Resolution Process of the Joint Capabilities Integration and Development System"

j. CJCSI 3010.02 series, "Joint Operations Concepts Development Process (JOPSC-DP)"

k. "White Paper on Conducting a Capabilities-Based Assessment (CBA) Under the Joint Capabilities Integration and Development System (JCIDS)," JCS J-8/Force Application Assessment Division, January 2006

l. "Joint Capabilities Integration and Development Systems (JCIDS) Analysis Code of Best Practice (COBP)," TRAC-TD-05-012, June 2005

m. "Analysis Handbook: A Guide for Performing Analysis Studies for Analyses of Alternatives or Functional Solution Analyses," Office of Aerospace Studies, Air Force Materiel Command, July 2004

n. DODI 8260.2, 21 January 2003, "Implementation of Data Collection, Development, and Management for Strategic Analyses"

o. DODI 4120.24M, 18 June 1998, "Defense Standardization Program (DSP)"

p. "Risk Management Guide for DOD Acquisition," Sixth Edition (v1.0), August 2006

q. DODD 2000.19E, 14 February, 2006, "Joint Improvised Explosive Device Defeat Organization"

r. DODD 4630.5, 5 May 2004, "Interoperability and Supportability of Information Technology (IT) and National Security Systems (NSS)"

s. DODI 4630.8, 30 June 2004, "Procedures for Interoperability and Supportability of Information Technology (IT) and National Security Systems (NSS)"

t. CJCSI 6212.01 series, "Interoperability and Supportability of Information Technology and National Security Systems"

u. "DOD Architecture Framework, Version 1.0," 9 February 2004

v. DODD 4650.1, 8 June 2004, "Policy for the Management and Use of the Electromagnetic Spectrum"

w. DODD 8100.1, 19 September 2002, "Global Information Grid (GIG) Overarching Policy"

x. DOD 5200.1-PH, April 1997, "DOD Guide to Marking Classified Documents"

y. CJCSI 3312.01 series, "Joint Military Intelligence Requirements Certification"

z. DODD 8320.2, 2 December 2004, "Data Sharing in a Net-Centric Department of Defense"

aa. JROCM 011-06, January 2006, "JROC Administrative Guide"

bb. DODD 2010.6, 10 November 2004, "Materiel Interoperability with Allies and Coalition Partners"

cc. CJCSM 3500.04 series, "Universal Joint Task List (UJTL)"

dd. "Capstone Concept for Joint Operations," Secretary of Defense, August 2005

ee. DODD 5000.1, 12 May 2003, "The Defense Acquisition System"

ff. "Net Centric Operations Warfare Reference Model (NCOW-RM)", v 1.0, December 2003

gg. CJCSI 5120.02 series, "Joint Doctrine Development System"

GLOSSARY

PART I – ACRONYMS

ACAT	acquisition category
ACTD	Advanced Concept Technology Demonstration
AMA	analysis of materiel/non-materiel approaches
AoA	analysis of alternatives
APB	acquisition program baseline
ASD(NII)	Assistant Secretary of Defense (Networks and Information Integration)
AT&L	acquisition, technology and logistics
AV	all views
CAD	Capabilities and Acquisition Division (Joint Staff/J-8)
CAIV	cost as an independent variable
CBA	capabilities-based assessment
CCJO	Capstone Concept for Joint Operations
CDD	capability development document
CIO	Chief Information Officer
CJCS	Chairman of the Joint Chiefs of Staff
CJCSI	Chairman of the Joint Chiefs of Staff Instruction
CJCSM	Chairman of the Joint Chiefs of Staff Manual
CONOPs	concept of operations
CPD	capability production document
CSA	combat support agency
DCR	doctrine, organization, training, materiel, leadership and education, personnel, and facilities (DOTMLPF) change recommendation
DDFP	Deputy Director for Force Protection
DIA	Defense Intelligence Agency
DISA	Defense Information Systems Agency
DJ-1	Joint Staff Director, J-1 (Manpower and Personnel Directorate)
DJ-5	Joint Staff Director, J-5 (Strategic Plans and Policy Directorate)
DJ-7	Joint Staff Director, J-7 (Operational Plans and Joint Force Development Directorate)
DJ-8	Joint Staff Director, J-8 (Force Structure, Resources, and Assessment Directorate)

DOD	Department of Defense
DODD	Department of Defense directive
DODI	Department of Defense instruction
DOT&E	Director of Operational Test and Evaluation
DOTMLPF	doctrine, organization, training, materiel, leadership and education, personnel, and facilities
DPS	Defense Planning Scenarios
E3	electromagnetic environmental effects
EA	electronic attack
ESOH	environment, safety, and occupational health
FAA	functional area analysis
FCB	Functional Capabilities Board
FNA	functional needs analysis
FOC	full operational capability
FoS	family of systems
FPO	functional process owner
FSA	functional solution analysis
G/FO	general/flag officer
GIG	Global Information Grid
HERF	hazards of electromagnetic radiation to fuel
HERO	hazards of electromagnetic radiation to ordinance
HERP	hazards of electromagnetic radiation to personnel
HSI	human systems integration
IA	information assurance
ICD	initial capabilities document
IOC	initial operational capability
IPL	Integrated Priority List
ISP	Information Support Plan
ISR	intelligence, surveillance, and reconnaissance
IT	information technology
ITWA	Initial Threat Warning Assessment
J-8	Force Structure, Resources, and Assessment Directorate, Joint Staff
JCA	joint capability area
JCB	Joint Capabilities Board
JCD	joint capabilities document
JCIDS	Joint Capabilities Integration and Development System
JCTD	Joint Capability Technology Demonstration
JIC	Joint Integrating Concept

JIEDDO	Joint Improvised Explosive Device Defeat Organization
JOpsC	Joint Operations Concepts
JPD	joint potential designator
JROC	Joint Requirements Oversight Council
JROCM	Joint Requirements Oversight Council memorandum
JSIMTP	Joint Staff Insensitive Munitions Technical Panel
JSCP	Joint Strategic Capabilities Plan
JTIS	Joint Transformation Integration System
JUON	joint urgent operational need
JWSTAP	Joint Weapon Safety Technical Advisory Panel
KDP	key decision point
KIP	Key Interface Profiles
KM/DS	Knowledge Management/Decision Support
KPP	key performance parameter
KSA	key system attribute
MAIS	Major Automated Information System
MCEB	Military Communications Electronics Board
MDA	milestone decision authority
MOE	measure of effectiveness
MRB	Mission Requirements Board
MUA	military utility assessment
NBCC	nuclear, biological, and chemical contamination
NGA	National Geospatial-Intelligence Agency
NR-KPP	Net-Ready Key Performance Parameter
NRO	National Reconnaissance Office
NSA	National Security Agency
NSS	National Security Strategy
O&M	operations and maintenance
O&S	operations and support
OV	operational view
OPA&E	Office of Program Analysis and Evaluation
OUSD(AT&L)	Office of the Under Secretary of Defense for Acquisition, Technology, and Logistics
PM	program manager
RDT&E	research, development, test, and evaluation
SDD	system development and demonstration
SoS	system of systems
SV	systems view

SWarF	Senior Warfighter Forum
TEMP	Test and Evaluation Master Plan
TV	technical view
UCP	Unified Command Plan
UJTL	Universal Joint Task List
USecAF	Under Secretary of the Air Force
USD(AT&L)	Under Secretary of Defense for Acquisition, Technology, and Logistics
USD(I)	Under Secretary of Defense for Intelligence
USJFCOM	United States Joint Forces Command
WARM	wartime reserve mode

PART II — DEFINITIONS

acquisition category (ACAT) - Categories established to facilitate decentralized decision-making and execution and compliance with statutorily imposed requirements. The ACAT determines the level of review, validation authority, and applicable procedures. Reference b provides the specific definition for each ACAT.

acquisition program baseline (APB) - Each program's APB is developed and updated by the program manager and will govern the activity by prescribing the cost, schedule, and performance constraints in the phase succeeding the milestone for which it was developed. The APB captures the user capability needs, including the key performance parameters, which are copied verbatim from the capability development document.

Advanced Concept Technology Demonstration - A demonstration of the military utility of a significant new technology and an assessment to clearly establish operational utility and system integrity.

all views - An architecture view that provides a summary and overview information. It describes the scope, purpose, intended users, environment depicted, and analytical findings associated with the architecture.

analysis of alternatives (AoA) - The evaluation of the performance, operational effectiveness, operational suitability, and estimated costs of alternative systems to meet a mission capability. The AoA assesses the advantages and disadvantages of alternatives being considered to satisfy capabilities, including the sensitivity of each alternative to possible changes in key assumptions or variables. The AoA is one of the key inputs to defining the system capabilities in the capability development document.

analysis of materiel/non-materiel approaches (AMA) - The Joint Capabilities Integration and Development System analysis to determine the best approach or combination of approaches to provide the desired capability or capabilities. Though the AMA is similar to an analysis of alternatives (AoA), it occurs earlier in the analytical process. Subsequent to approval of an initial capabilities document, which may lead to a potential acquisition category I/IA program, program analysis, and evaluation provides specific guidance to refine this initial AMA into an AoA.

approval - The formal or official sanction of the identified capability described in the capability documentation. Approval also certifies that the documentation has been subject to the uniform process established by the DOD 5000 series.

architecture - The structure of components, their relationships, and the principles and guidelines governing their design and evolution over time.

attribute - A quantitative or qualitative characteristic of an element or its actions.

capabilities-based assessment (CBA) – The CBA is the Joint Capabilities Integration and Development System analysis process. It includes three phases: the functional area analysis (FAA), the functional needs analysis (FNA), and the functional solution analysis. The results of the CBA are used to develop a joint capabilities document (based on the FAA and FNA) or initial capabilities document (based on the full analysis).

capability - The ability to achieve a desired effect under specified standards and conditions through combinations of means and ways to perform a set of tasks. It is defined by an operational user and expressed in broad operational terms in the format of a joint or initial capabilities document or a joint doctrine, organization, training, materiel, leadership and education, personnel, and facilities (DOTMLPF) change recommendation. In the case of materiel proposals and documents, the definition will progressively evolve to DOTMLPF performance attributes identified in the capability development document and the capability production document.

capability-based planning (CBP) - The process for planning under uncertainty to provide capabilities suitable for a wide range of modern-day challenges and circumstances while working within an economic framework that necessitates choice.

capability development document (CDD) - A document that captures the information necessary to develop a proposed program(s), normally using an evolutionary acquisition strategy. The CDD outlines an affordable increment of militarily useful, logistically supportable, and technically mature capability. The CDD may define multiple increments if there is sufficient definition of the performance attributes (key performance parameters, key system attributes, and other attributes) to allow approval of multiple increments.

capability gaps - The inability to achieve a desired effect under specified standards and conditions through combinations of means and ways to perform a set of tasks. The gap may be the result of no existing capability, lack of proficiency or sufficiency in existing capability, or the need to recapitalize an existing capability.

capability need – A capability identified through the FAA, required to be able to perform a task within specified conditions to a required level of performance.

capability production document - A document that addresses the production elements specific to a single increment of an acquisition program.

Capstone Concept for Joint Operations (CCJO) - The CCJO is the overarching concept that guides the development of future joint force capabilities. It broadly describes how the joint force is expected to operate 10-20 years in the future in all domains across the range of military operations within a multilateral environment and in collaboration with interagency and multinational partners. The CCJO describes the proposed end states derived from strategy as military problems and the characteristics of the future joint force (reference dd).

certification - A statement of adequacy provided by a responsible agency for a specific area of concern in support of the validation process.

comment priorities -

a. critical - Indicates nonconcurrence in the document, for both the O-6 and flag review, until the comment is satisfactorily resolved.

b. substantive - Provided because a section in the document appears to be or is potentially unnecessary, incorrect, misleading, confusing, or inconsistent with other sections.

c. administrative - Corrects what appears to be a typographical, format, or grammatical error.

concept of operations (CONOPs) - A verbal or graphic statement, in broad outline, of a commander's assumptions or intent in regard to an operation or series of operations. The CONOPs frequently is embodied in campaign plans and operation plans; in the latter case, particularly when the plans cover a series of connected operations to be carried out simultaneously or in succession. The concept is designed to give an overall picture of the operation. It is included primarily for additional clarity of purpose. Also called commander's concept.

critical considerations - The seven domains of DOTMLPF: joint doctrine, agile organizations, joint training, enhanced materiel, innovative leadership and education, and high quality people; plus the additional element of facilities and the policies that affect them.

DOD 5000 Series - DOD 5000 series refers collectively to DODD 5000.1 and DODI 5000.2, references ee and b, respectively.

DOD component - The DOD components consist of the Office of the Secretary of Defense, the Military Departments, the Chairman of the Joint Chiefs of Staff, the combatant commands, the Office of the Inspector General of the

Department of Defense, the Defense agencies, DOD field activities, and all other organizational entities within the Department of Defense.

electromagnetic environmental effects (E3) - The impact of the electromagnetic environment upon the operational capability of military forces, equipment, systems, and platforms. It encompasses all electromagnetic disciplines, including electromagnetic compatibility and electromagnetic interferences; electromagnetic vulnerability; electromagnetic pulse, electronic protection, hazards of electromagnetic radiation to personnel, ordnance and volatile materials, and natural phenomena effects of lightning and precipitation static.

embedded instrumentation - Data collection and processing capabilities, integrated into the design of a system for one or more of the following uses: diagnostics, prognostics, testing, or training.

endorsement – A statement of adequacy, and any limitations, provided by a responsible agency for a specific area of concern in support of the validation process.

environment - Air, water, land, living things, built infrastructure, cultural resources, and the interrelationships that exist among them.

environment, safety and occupational health (ESOH) assets – The workforce and natural infrastructure. A subset of the installation assets necessary to support operational capability over perpetual useful life.

environment, safety and occupational health (ESOH) management – Sustaining the readiness of the US Armed Forces by cost effectively managing all installation assets through promotion of safety, protection of human health, and protection and restoration of the environment.

evolutionary acquisition - Preferred DOD strategy for rapid acquisition of mature technology for the user. An evolutionary approach delivers capability in increments, recognizing up front the need for future capability improvements.

family of systems (FoS) - A set of systems that provide similar capabilities through different approaches to achieve similar or complementary effects. For instance, the warfighter may need the capability to track moving targets. The FoS that provides this capability could include unmanned or manned aerial vehicles with appropriate sensors, a space-based sensor platform or a special operations capability. Each can provide the ability to track moving targets but with differing characteristics of persistence, accuracy, timeliness, etc.

functional area - A broad scope of related joint warfighting skills and attributes that may span the range of military operations. Specific skill groupings that

make up the functional areas are approved by the Joint Requirements Oversight Council.

Functional Capabilities Board (FCB) - A permanently established body that is responsible for the organization, analysis, and prioritization of joint warfighting capabilities within an assigned functional area.

functional process owner (FPO) – Joint Staff directorates that have the responsibility for the DOTMLPF-selected "joint processes," as shown in the table below.

Critical Consideration DOTMLPF FPO

Joint Doctrine	Joint Staff/J-7
Joint Organizations	Joint Staff/J-8 (with J-1 & J-5 support)
Joint Training	Joint Staff/J-7
Joint Materiel	Joint Staff/J-8
Joint Leadership and Education	Joint Staff/J-7
Joint Personnel	Joint Staff/J-1
Joint Facilities	Joint Staff/J-4

Gatekeeper - That individual who makes the initial joint potential designation of Joint Capabilities Integration and Development System documents. This individual will also make a determination of the lead and supporting Functional Capabilities Boards (FCBs) for capability documents. The Gatekeeper is supported in these functions by the FCB working group leads and the Joint Staff/J-6. The Joint Staff Vice Director, J-8, serves as the Gatekeeper.

human systems integration - Defined in reference b, includes the integrated and comprehensive analysis, design and assessment of requirements, concepts and resources for system manpower, personnel, training, safety and occupational health, habitability, personnel survivability, and human factors engineering.

increment - A militarily useful and supportable operational capability that can be effectively developed, produced or acquired, deployed, and sustained. Each increment of capability will have its own set of threshold and objective values

set by the user. Spiral development is an instance of an incremental development strategy where the end state is unknown. Technology is developed to a desired maturity and injected into the delivery of an increment of capability.

information assurance - Information operations that protect and defend information and information systems by ensuring their availability, integrity, authentication, confidentiality, and non-repudiation. This includes providing for restoration of information systems by incorporating protection, detection, and reaction capabilities.

Information Support Plan (ISP) - The ISP shall describe system dependencies and interface requirements in sufficient detail to enable testing and verification of information technology (IT) and National Security Systems (NSS) interoperability and supportability requirements. The ISP shall also include IT and NSS systems interface descriptions, infrastructure and support requirements, standards profiles, measures of performance, and interoperability shortfalls.

information technology (IT) - Any equipment, or interconnected system or subsystem of equipment, that is used in the automatic acquisition, storage, manipulation, management, movement, control, display, switching, interchange, transmission, or reception of data or information by the executive agency. This includes equipment used by a component directly, or used by a contractor under a contract with the component, which (i) requires the use of such equipment, or (ii) requires the use, to a significant extent, of such equipment in the performance of a service or the furnishing of a product. The term "IT" also includes computers, ancillary equipment, software, firmware and similar procedures, services (including support services), and related resources. Notwithstanding the above, the term "IT" does not include any equipment that is acquired by a federal contractor incidental to a federal contract. The term "IT" includes National Security Systems.

initial capabilities document (ICD) - Documents the requirement for a materiel or non-materiel approach or an approach that is a combination of materiel and non-materiel to satisfy a specific capability gap(s). It defines the capability gap(s) in terms of the functional area, the relevant range of military operations, desired effects, time, and DOTMLPF and policy implications and constraints. The ICD summarizes the results of the DOTMLPF analysis and the DOTMLPF approaches (materiel and non-materiel) that may deliver the required capability. The outcome of an ICD could be one or more joint DOTMLPF change recommendations or capability development documents.

integrated architectures - An architecture consisting of multiple views or perspectives (operational view, systems view, and technical standards view)

that facilitates integration and promotes interoperability across capabilities and among related integrated architectures.

interoperability - The ability of systems, units, or forces to provide data, information, materiel, and services to and accept the same from other systems, units, or forces, and to use the data, information, materiel, and services so exchanged to enable them to operate effectively together. Information Technology and National Security Systems interoperability includes both the technical exchange of information and the end-to-end operational effectiveness of that exchanged information as required for mission accomplishment.

joint capability area (JCA) - JCAs are collections of similar capabilities logically grouped to support strategic investment decision-making, capability portfolio management, capability delegation, capability analysis (gap, excess, and major trades), and capabilities-based and operational planning. JCAs are intended to provide a common capabilities language for use across many related DOD activities and processes and are an integral part of the evolving CBP process.

a. Tier 1 JCA - A Tier 1 JCA is a high-level capability category that facilitates capabilities-based planning, major trade analysis, and decision-making. Tier 1 JCAs are comprised of functional-, operational-, domain-, and institutional-based joint capabilities. All DOD capabilities can be mapped to a Tier 1 JCA.

b. Tier 2 JCA - A Tier 2 JCA is a comprehensive capability area logically placed within a Tier 1 JCA. Tier 2 JCAs are capability areas with sufficient detail to help identify operationally required military capabilities, or to help identify joint force generation and management capabilities. A Tier 2 JCA scopes, bounds, clarifies, and better defines the intended capability area of its 'parent' Tier 1 JCA. Tier 2 JCAs are intended to reduce duplication between Tier 1 JCAs, and are not Service, mission, or platform specific.

c. JCA Taxonomy. The structure or framework of joint capabilities, used in conjunction with the JCA Lexicon, to facilitate capabilities-based planning, analysis, and decision-making.

d. JCA Lexicon. A collection of joint capability definitions that provide a common capabilities language for DOD to facilitate capabilities-based planning, analysis, and decision-making.

Joint Capabilities Board (JCB) - The JCB functions to assist the Joint Requirements Oversight Council (JROC) in carrying out its duties and responsibilities. The JCB reviews and, if appropriate, endorses all Joint Capabilities Integration and Development System and joint DOTMLPF change recommendation documents prior to their submission to the JROC. The JCB is chaired by the Joint Staff Director of Force Structure, Resources and

Assessment (J-8). It is comprised of general and flag officer representatives of the Services.

joint capabilities document (JCD) – The JCD identifies a set of capabilities that support a defined mission area utilizing associated Joint Operations Concepts (JOpsC), CONOPs, Unified Command Plan, or other assigned missions. The capabilities are identified by analyzing what is required across all functional areas to accomplish the mission. The gaps or redundancies are then identified by comparing the capability needs to the capabilities provided by existing or planned systems. The JCD will be used as a baseline for one or more functional solution analyses leading to the appropriate initial capabilities documents or joint DOTMLPF change recommendation, but cannot be used for the development of capability development or capability production documents. The JCD will be updated as changes are made to the JOpsC, CONOPs, or assigned missions.

Joint Capability Technology Demonstration (JCTD) - A demonstration of the military utility of a significant new technology and an assessment to clearly establish operational utility and system integrity.

joint doctrine, organization, training, materiel, leadership and education, personnel and facilities change recommendation – A recommendation for changes to existing joint resources when such changes are not associated with a new defense acquisition program.

a. joint doctrine – Fundamental principles that guide the employment of US military forces in coordinated action toward a common objective. Though neither policy nor strategy, joint doctrine serves to make US policy and strategy effective in the application of US military power. Joint doctrine is based on extant capabilities. Joint doctrine is authoritative guidance and will be followed except when, in the judgment of the commander, exceptional circumstances dictate otherwise.

b. joint organization - A joint unit or element with varied functions enabled by a structure through which individuals cooperate systematically to accomplish a common mission and directly provide or support joint warfighting capabilities. Subordinate units and elements coordinate with other units and elements and, as a whole, enable the higher-level joint unit or element to accomplish its mission. This includes the joint staffing (military, civilian and contractor support) required to operate, sustain and reconstitute joint warfighting capabilities.

c. joint training – Training, including mission rehearsals, of individuals, units, and staffs using joint doctrine or joint tactics, techniques, and procedures to prepare joint forces or joint staffs to respond to strategic,

operational, or tactical requirements considered necessary by the combatant commanders to execute their assigned or anticipated missions.

d. joint materiel – All items (including ships, tanks, self-propelled weapons, aircraft, etc., and related spares, repair parts, and support equipment, but excluding real property, installations, and utilities) necessary to equip, operate, maintain, and support joint military activities without distinction as to its application for administrative or combat purposes.

e. joint leadership and education – Professional development of the joint commander is the product of a learning continuum that comprises training, experience, education, and self-improvement. The role of professional military education and joint professional military education is to provide the education needed to complement training, experience, and self-improvement to produce the most professionally competent individual possible.

f. joint personnel – The personnel component primarily ensures that qualified personnel exist to support joint capabilities. This is accomplished through synchronized efforts of joint force commanders and Service components to optimize personnel support to the joint force to ensure success of ongoing peacetime, contingency, and wartime operations.

g. joint facilities – Real property consisting of one or more of the following: a building, a structure, a utility system, pavement, and underlying land. Key facilities are selected command installations and industrial facilities of primary importance to the support of military operations or military production programs. A key facilities list is prepared under the policy direction of the Joint Chiefs of Staff.

joint experimentation - An iterative process for developing and assessing concept-based hypotheses to identify and recommend the best value-added solutions for changes in doctrine, organization, training, materiel, leadership and education, personnel and facilities and policy required to achieve significant advances in future joint operational capabilities.

joint force - A general term applied to a force composed of significant elements, assigned or attached, of two or more Military Departments operating under a single joint force commander.

joint operating environment - The environment of land, sea, and/or airspace within which a joint force commander employs capabilities to execute assigned missions.

Joint Operations Concepts (JOpsC) – JOpsC is a family of joint future concepts consisting of a Capstone Concept for Joint Operations, Joint Operating Concepts (JOCs), Joint Functional Concepts (JFCs) and Joint Integrating

Concepts (JICs). They are a visualization of future operations and describe how a commander, using military art and science, might employ capabilities necessary to successfully meet challenges 8 to 20 years in the future. Ideally, they will produce military capabilities that render previous ways of warfighting obsolete and may significantly change the measures of success in military operations overall. JOpsC presents a detailed description of "how" future operations may be conducted and provides the conceptual basis for joint experimentation and capabilities-based assessments (CBAs). The outcomes of experimentation and CBA will underpin investment decisions leading to the development of new military capabilities beyond the Future Years Defense Program.

joint potential designator (JPD) - A designation assigned by the Gatekeeper to determine the Joint Capabilities Integration and Development System validation and approval process and the potential requirement for certifications and/or endorsements.

a. "JROC Interest" designation will apply to all acquisition category (ACAT) I/information assurance programs and ACAT II and below programs where these capabilities have a significant impact on joint warfighting or have a potentially significant impact across Services or interoperability in allied and coalition operations. All JCDs and joint doctrine, organization, training, materiel, leadership and education, personnel and facilities change recommendations will be designated JROC Interest. This designation may also apply to intelligence capabilities that support DOD and national intelligence requirements. These documents will receive all applicable certifications, including a weapon safety endorsement, when appropriate, and be staffed through the JROC for validation and approval. An exception may be made for ACAT IAM programs without significant impact on joint warfighting (i.e., business-oriented systems). These programs may be designated either Joint Integration, Joint Information, or Independent.

b. "Joint Integration" designation will apply to ACAT II and below programs where the capabilities and/or systems associated with the document do not significantly affect the joint force and an expanded review is not required. Staffing is required for applicable certifications (IT and NSS interoperability and supportability and/or intelligence) and for a weapon safety endorsement when appropriate. Once the required certification(s)/weapon safety endorsement are completed, the document may be reviewed by the Functional Capabilities Board (FCB). Joint Integration documents are validated and approved by the sponsoring component.

c. "Joint Information" designation applies to ACAT II and below programs that have interest or potential impact across Services or agencies but do not have significant impact on the joint force and do not reach the threshold for JROC Interest. No certifications or endorsements are required. Once

designated Joint Information, staffing is required for informational purposes only and the FCB may review the document. Joint Information documents are validated and approved by the sponsoring component.

d. "Independent" designation will apply to ACAT II and below programs where the capabilities and/or systems associated with the document do not significantly affect the joint force, an expanded review is not required, and no certifications or endorsements are required. Once designated Independent, the FCB may review the document. Independent documents are validated and approved by the sponsoring component.

Joint Requirements Oversight Council memorandum (JROCM) - Official JROC correspondence generally directed to audiences external to the JROC. JROCMs are usually decisional in nature.

Joint Transformation Integration System (JTIS) - A Joint Staff-supported database focused on transformation decisions and information dissemination. The mission of the JTIS is to support CJCS decision-making by providing a single-point comprehensive database of related and linked initiatives associated with joint DOTMLPF implementation. Using the latest information technology, the JTIS will integrate diverse and rapidly changing transformation data and make it available to senior leadership in a unified and comprehensible manner. The leadership will use this information to assess and guide the transformation process.

joint urgent operational need (JUON) - An urgent operational need identified by a combatant commander involved in an ongoing named operation. A JUON's main purpose is to identify and subsequently gain Joint Staff validation and resourcing solution, usually within days or weeks, to meet a specific high-priority combatant commander need. The scope of a combatant commander JUON will be limited to addressing urgent operational needs that: (1) fall outside of the established Service processes; and (2) most importantly, if not addressed immediately, will seriously endanger personnel or pose a major threat to ongoing operations. They should not involve the development of a new technology or capability; however, the acceleration of a JCTD/ACTD or minor modification of an existing system to adapt to a new or similar mission is within the scope of the JUON validation and resourcing process.

Joint Weapon Safety Technical Advisory Panel (JWSTAP) – The JWSTAP provides subject matter expertise review and constructive comments to the Deputy Director for Force Protection (DDFP) regarding the safe employment, storage, and transport of munitions and weapons in joint operating environments. Pre-existing requirement or capability documents are not within the scope of the JWSTAP. The JWSTAP review is focused on the capability attributes and metrics of a given weapon to identify potential safety issues resulting from interaction between the proposed weapon and other capabilities

existing within the same joint operating environment. Safety concerns identified by the JWSTAP are presented to the DDFP with recommended revisions to the capability document to reduce or eliminate the identified safety concern while maintaining the desired operational effectiveness.

key decision points - Major decision points that separate the phases of a DOD space program.

key interface profiles (KIPs) - KIPs provide a net-centric oriented approach for managing interoperability across the Global Information Grid (GIG) based on the configuration control of key interfaces. The KIP is the set of documentation produced as a result of interface analysis which: designates an interface as key; analyzes it to understand its architectural, interoperability, test, and configuration management characteristics; and documents those characteristics in conjunction with solution sets for issues identified during the analysis. GIG KIPs provide a description of required operational functionality, systems functionality, and technical specifications for the interface. The profile consists of refined operational and systems view products, interface control document and/or specifications, engineering management plan, configuration management plan, technical view with systems view-TV bridge, and procedures for standards conformance and interoperability testing.

key performance parameters (KPP) - Those attributes or characteristics of a system that are considered critical or essential to the development of an effective military capability and those attributes that make a significant contribution to the characteristics of the future joint force as defined in the Capstone Concept for Joint Operations. KPPs must be testable to enable feedback from test and evaluation efforts to the requirements process. KPPs are validated by the Joint Requirements Oversight Council (JROC) for JROC Interest documents, and by the DOD component for Joint Integration, Joint Information, or Independent documents. Capability development and capability production document KPPs are included verbatim in the acquisition program baseline.

key system attribute (KSA) – An attribute or characteristic considered crucial in support of achieving a balanced solution/approach to a key performance parameter (KPP) or some other key performance attribute deemed necessary by the sponsor. KSAs provide decision makers with an additional level of capability performance characteristics below the KPP level and require a sponsor 4-star, Defense agency commander, or Principal Staff Assistant to change.

lead DOD component - The Service or agency that has been formally designated as lead for a joint program by the Milestone Decision Authority. The lead component is responsible for common documentation, periodic reporting, and funding actions.

logistic support - Logistic support encompasses the logistic services, materiel, and transportation required to support continental US-based and worldwide-deployed forces.

materiel solution – Correction of a deficiency, satisfaction of a capability gap, or incorporation of new technology that results in the development, acquisition, procurement, or fielding of a new item (including ships, tanks, self-propelled weapons, aircraft, etc., and related software, spares, repair parts, and support equipment, but excluding real property, installations, and utilities) necessary to equip, operate, maintain, and support military activities without disruption as to its application for administrative or combat purposes. In the case of family of systems and system of systems approaches, an individual materiel solution may not fully satisfy a necessary capability gap on its own.

measures of effectiveness - Measures designed to correspond to accomplishment of mission objectives and achievement of desired effects.

milestones - Major decision points that separate the phases of an acquisition program.

Milestone Decision Authority (MDA) - The individual designated, in accordance with criteria established by the Under Secretary of Defense for Acquisition, Technology and Logistics, the Assistant Secretary of Defense (Networks and Information Integration), for Automated Information System acquisition programs, or by the Under Secretary of the Air Force, as the DOD Space MDA, to approve entry of an acquisition program into the next phase.

Military Department - One of the departments within the Department of Defense created by the National Security Act of 1947, as amended.

militarily useful capability - A capability that achieves military objectives through operational effectiveness, suitability, and availability, which is interoperable with related systems and processes, transportable and sustainable when and where needed, and at costs known to be affordable over the long term.

Mission Requirements Board (MRB) - The MRB manages the national requirements process that reviews, validates, and approves national requirements for future intelligence capabilities and systems. It is the senior validation and approval authority for future intelligence requirements funded within the National Foreign Intelligence Program and provides advice and council on future requirements funded outside that body.

National Security Systems - Telecommunications and information systems, operated by the Department of Defense, the functions, operation, or use of which involves: (1) intelligence activities; (2) cryptologic activities related to

national security; (3) the command and control of military forces; (4) equipment that is an integral part of a weapon or weapons systems; or (5) is critical to the direct fulfillment of military or intelligence missions. Subsection (5) in the preceding sentence does not include procurement of automatic data processing equipment or services to be used for routine administrative and business applications (including payroll, finance, logistics, and personnel management applications).

net-centric - Relating to or representing the attributes of a net-centric environment. A net-centric environment is a robust, globally interconnected network environment (including infrastructure, systems, processes, and people) in which data is shared timely and seamlessly among users, applications, and platforms. A net-centric environment enables substantially improved military situational awareness and significantly shortened decision-making cycles.

net-ready key performance parameter (NR-KPP) - The NR-KPP assesses information needs, information timeliness, information assurance, and net-ready attributes required for both the technical exchange of information and the end-to-end operational effectiveness of that exchange. The NR-KPP consists of measurable and testable characteristics and/or performance metrics required for the timely, accurate, and complete exchange and use of information to satisfy information needs for a given capability. The NR-KPP is comprised of the following elements:

a, Compliance with the Net-Centric Operations and Warfare Reference Model (reference ff).

b. Compliance with applicable Global Information Grid key interface profiles.

c. Verification of compliance with DOD information assurance requirements.

d. Supporting integrated architecture products required to assess information exchange and use for a given capability.

nondevelopmental item - Any previously developed item used exclusively for governmental purposes by a federal agency, a state or local government, or a foreign government with which the United States has a mutual defense cooperation agreement.

non-materiel solution - Changes in doctrine, organization, training, materiel, leadership and education, personnel, facilities, or policy (including all human systems integration domains) to satisfy identified functional capabilities. The materiel portion is restricted to commercial or nondevelopmental items that

may be purchased commercially or by purchasing more systems from an existing materiel program.

objective value - The desired operational goal associated with a performance attribute beyond which any gain in utility does not warrant additional expenditure. The objective value is an operationally significant increment above the threshold. An objective value may be the same as the threshold when an operationally significant increment above the threshold is not significant or useful.

occupational health - Activities directed toward anticipation, recognition, evaluation, and control of potential occupational and environmental health hazards; preventing injuries and illness of personnel during operations; and accomplishment of mission at acceptable levels of risk.

operational effectiveness - Measure of the overall ability to accomplish a mission when used by representative personnel in the environment planned or expected for operational employment of the system considering organization, doctrine, supportability, survivability, vulnerability, and threat.

operational suitability - The degree to which a system can be placed and sustained satisfactorily in field use with consideration given to availability, compatibility, transportability, interoperability, reliability, wartime usage rates, maintainability, environmental, safety and occupational health, human factors, habitability, manpower, logistics, supportability, logistics supportability, natural environment effects and impacts, documentation, and training requirements.

operational view (OV) - An architecture view that describes the joint capabilities that the user seeks and how to employ them. The OVs also identify the operational nodes, the critical information needed to support the piece of the process associated with the nodes, and the organizational relationships.

operator - An operational command or agency that employs the acquired system for the benefit of users. Operators may also be users.

qualified prototype project – A unique materiel system developed for demonstration under field conditions to confirm adequacy as a solution for a validated mission gap. To be a qualified project, a prototype must have Joint Capabilities Integration and Development System validation of mission gap and include an independent military utility assessment and/or final report including those relevant elements of an initial capabilities document.

quick reaction technology project – A research project transitioning products directly into demonstrations under field conditions and intended for immediate warfighting end users. To be a qualified project, a prototype must have Joint

Capabilities Integration and Development System validation of mission gap and include an independent military utility assessment and/or final report including those relevant elements of an initial capabilities document.

safety - The programs, risk management activities, and organizational and cultural values dedicated to preventing injuries and accidental loss of human and materiel resources and to protecting the environment from the damaging effects of DOD mishaps.

Senior Warfighter Forum (SWarF) - The SWarF is a mechanism by which a combatant commander can engage with his senior warfighting counterparts to identify the issues and capabilities associated with a particular mission or function of one or more combatant commands. The scope of a SWarF is defined by the combatant commander leading the effort. The results of the SWarF may be used to support the development of a joint capabilities document to identify joint warfighting capabilities and gaps in those capabilities.

sponsor - The DOD component, principal staff assistant, or domain owner responsible for all common documentation, periodic reporting, and funding actions required to support the capabilities development and acquisition process for a specific capability proposal. The only exception is for the sponsor of a joint capabilities document (JCD). A combatant command or Functional Capability Board may be the sponsor for the JCD. In this usage, the responsibilities of the sponsor are limited to performing the capabilities-based assessment and developing the JCD for Joint Requirements Oversight Council validation and approval.

standard - Quantitative or qualitative measures for specifying the levels of performance of a task.

supportability - Supportability is a key component of system availability. It includes design, technical support data, and maintenance procedures to facilitate detection, isolation, and timely repair and/or replacement of system anomalies. This includes factors such as diagnostics, prognostics, real-time maintenance data collection, and human systems integration considerations.

sustainability - The ability to maintain the necessary level and duration of operational activity to achieve military objectives. Sustainability is a function of providing for and maintaining those levels of ready forces, infrastructure assets, materiel, and consumables necessary to support military effort.

sustainment - The provision of personnel, training, logistic, environment, safety and occupational health management, and other support required to maintain and prolong operations or combat until successful accomplishment or revision of the mission or of the national objective.

synchronization - The process of coordinating the timing of the delivery of capabilities, often involving different initiatives, to ensure the evolutionary nature of these deliveries satisfies the capabilities needed at the specified time that they are needed. Synchronization is particularly critical when the method of achieving these capabilities involves a family of systems or system of systems approach.

system of systems (SoS) - A set or arrangement of interdependent systems that are related or connected to provide a given capability. The loss of any part of the system will significantly degrade the performance or capabilities of the whole. The development of an SoS solution will involve trade space between the systems as well as within an individual system performance.

system training - All training methodologies (embedded, institutional, Mobile Training Team, computer, and Web-based) that can be used to train and educate operator and maintainer personnel in the proper technical employment and repair of the equipment and components of a system and to educate and train the commanders and staffs in the doctrinal tactics, techniques, and procedures for employing the system in operations and missions.

systems view - An architecture view that identifies the kinds of systems, how to organize them, and the integration needed to achieve the desired operational capability. It will also characterize available technology and systems functionality.

task - An action or activity (derived from an analysis of the mission and concept of operations) assigned to an individual or organization to provide a capability.

technical view - An architecture view that describes how to tie the systems together in engineering terms. It consists of standards that define and clarify the individual systems technology and integration requirements.

threshold value - A minimum acceptable operational value below which the utility of the system becomes questionable.

user - An operational command or agency that receives or will receive benefit from the acquired system. Combatant commanders and their Service component commands and Defense agencies are the users. There may be more than one user for a system. Because the Service component commands are required to organize, equip, and train forces for the combatant commanders, they are seen as users for systems. The Chiefs of the Services and heads of other DOD components are validation and approval authorities and are not viewed as users.

user representative - A command or agency that has been formally designated by proper authority to represent single or multiple users in the capabilities and acquisition process. The Services and the Service components of the combatant commanders are normally the user representatives. There should only be one user representative for a system.

validation - The review of documentation by an operational authority other than the user to confirm the operational capability. Validation is a precursor to approval.

validation authority - The individual within the DOD components charged with overall capability definition and validation. In his role as Chairman of the Joint Requirements Oversight Council (JROC), the Vice Chairman of the Joint Chiefs of Staff is the validation authority for all potential major defense acquisition programs. The validation authority for Joint Capabilities Integration and Development System documents is dependent upon the joint potential designator of the program or initiative as specified below:

a. JROC Interest – JROC or as delegated.

b. Joint Integration - Sponsor

c. Joint Information - Sponsor

d. Independent – Sponsor

weapon – Military munitions, directed energy weapons, electromagnetic rail guns together with firing, launching, and controlling systems including safety critical software. Nuclear weapons and their components; small arms, and associated ammunition (.50 caliber or 8 gauge or smaller); intercontinental ballistic missiles, space launch vehicles, and the non-weapon related aspects of vehicles or platforms from which military munitions or directed energy weapons are fired or launched are excluded.

weapon safety endorsement – Endorsement is the means for documenting, in support of the Joint Capabilities Integration and Development System process, the extent to which weapon capabilities documents provide for safe integration into joint operating environments. Endorsement recommendations will be prepared by the Joint Weapon Safety Technical Advisory Panel and submitted to the J-8/Deputy Director for Force Protection for appropriate staffing and endorsement by the Force Protection Functional Capabilities Board.

(INTENTIONALLY BLANK)

MEMORANDUM OF AGREEMENT
ON ESTABLISHMENT OF A
JOINT REQUIREMENT
FOR
INSENSITIVE MUNITIONS

We, the undersigned representatives of the Departments of the Army, Navy, and Air Force, agree to implement the attached requirements and policy within our departments. We also agree to continue to transport those munitions that remain sensitive.

30 JUN 1987

Department of the Army

SEP 08 1987

Department of the Navy

Department of the Air Force 5 JUN 1987

DANIEL S. RAK
Acting Assistant Secretary
(Acquisition)

Attachment
Annex - Joint Requirement for Insensitive Munitions

ANNEX

JOINT REQUIREMENT FOR
INSENSITIVE MUNITIONS

1. PURPOSE. To establish a joint Service insensitive munitions policy.

2. DEFINITIONS

a. Munition. An energy-generating device used to inflict damage, including, but not limited to, such items as bombs, missiles, projectiles, torpedoes, mines, pyrotechnics, demolition charges, and special purpose devices.

b. Insensitive Munition (IM). A munition that will reliably fulfill its performance, readiness, and operational requirements on demand, but will minimize the violence of a reaction and subsequent collateral damage when subjected to unplanned stimuli.

c. Less Sensitive Munition (LSM). A munition that meets some but not all of the sensitivity test criteria established.

d. Technical Criteria. The technical criteria (Tab) describe the maximum acceptable reaction in response to various test stimuli for classifying a munition as insensitive.

3. POLICY

a. The reactive nature of munitions increases their susceptibility to unplanned stimuli, presenting a major threat to the survivability of US ships, aircraft, weapon carriers, tanks, other weapons platforms, and stockpiles. This threat can be reduced by making munitions insensitive through the use of insensitive materials or improved mechanical/electrical design concepts.

b. To the extent practical, all munitions should be made to meet the IM criteria (Tab). Practical constraints include, but are not limited to, performance requirements, affordability, remaining service life, and technical feasibility.

c. Each Service will conduct an assessment of its existing and planned munitions for incorporation of insensitive energetic materials and/or insensitive mechanical/electrical design. After the assessment, those munitions required to be insensitive should meet the IM criteria.

(1) All programmatic milestone reviews for munitions will specifically address the sensitivity issue including cost, impact on operational capability, and alternatives.

(2) Operational capability must be maintained, but every effort must be made to meet operational requirements with the least sensitive system design available.

(3) If a munition cannot be designed to be insensitive, it will be designed to be less sensitive through incorporation of as many insensitive features as the design Service considers appropriate and feasible.

d. The Joint Logistic Commanders (JLC) will review the status of IM annually. The status will include a report of munitions that will be made insensitive, those that can be made to meet only some of the IM criteria, and those that cannot meet any of the IM criteria. The report will also include plans and unresolved issues. The JLC will initiate appropriate changes to this requirement and the criteria (Tab) based on their annual review. Changes will reflect additional requirements and criteria that are common among the Services and will improve the insensitivity of munitions.

4. ACTION

a. Each Service will implement a system for the planning, funding, and execution of its IM efforts. For joint Service munitions, the lead Service will have primary coordination responsibility with participation of the other Service(s).

b. Each Service will examine all munitions for compliance with the IM criteria. Munitions that do not meet all insensitive criteria will be further evaluated for feasibility of making them insensitive. The evaluation should include such factors as risk, cost, schedule, remaining service life, available technology, and use by other Services. The evaluation should state whether the munitions can be made to meet any of the IM criteria.

c. Each Service will reevaluate, periodically, munitions that are not insensitive to determine if emerging technology, production cost reductions, or other factors will make conversion to insensitivity or less sensitivity feasible.

d. Each Service's explosives safety review organization will review munitions programs for compliance with the IM criteria and make recommendations to the appropriate Service organization. For those weapons with multi-Service sponsorship, the respective safety and research and development organizations will review the program for compliance and forward their recommendations to the lead Service.

e. Each Service will ensure that the policy on insensitive munitions is considered in all dealings with other Services and foreign military agencies.

f. Munitions sensitivity will be considered in all weapons procurement reviews.

Attachment
Tab - Joint Service Technical Criteria and Definitions for Insensitive Munitions

TAB

JOINT SERVICE TECHNICAL CRITERIA AND DEFINITIONS FOR INSENSITIVE MUNITIONS

1. GENERAL

a. Purpose. This document delineates technical criteria associated with insensitive munitions (IM). It provides definitions, identifies tests, and establishes criteria for those tests.

b. Application. This document is applicable to all nonnuclear ordnance and explosive systems.

2. DEFINITIONS

a. Burning. The energetic material ignites and is consumed. The case may melt or weaken sufficiently to rupture and allow release of the combustion gases. The debris stays chiefly within the area of the fire except for case closures such as loading ports or base plates that may be dislodged and thrown a short distance by the internal pressure. Beyond 50 feet distance these will not be "hazardous fragments" as defined below.

b. Deflagration with Propulsion. The munition case ruptures or breaks apart and may expel burning material that can start fires. The munition or parts of it may be propelled some distance if not constrained. Some overpressure will occur because of the sudden venting of the case, and fire and smoke hazards will exit. Propelled pieces may be "hazardous fragments" as defined below, but not be expected to cause detonation of munitions stored nearby.

c. Detonation. A supersonic reaction that propagates through the explosive and produces an intense shock in the surrounding medium. When the explosive is encased, there is very rapid plastic deformation of the encasing metal followed by extensive fragmentation. A detonating munition produces the maximum blast and fragmentation damage it is designed to produce.

d. Energetic Material. A substance that is capable by chemical reaction of producing gas at such a temperature, pressure, and rate that it can damage its surroundings. The term includes all liquid and solid materials described as high explosives, propellants, and pyrotechnics even though some pyrotechnics may not produce reaction gases. Fuel-air explosives and explosives consisting of liquid fuels and oxidants are included when used in munitions.

e. Explosion. A violent rupture of a container with sudden release of gases causing brittle fracture of the casing, and with large and small fragments of the case thrown out, often to considerable distances; and the case's contents of burning and unreacted energetic material thrown about. An explosion produces shock waves in the air that can damage structures. Its blast and resulting high velocity debris can cause minor ground craters, and damage ranging from dents to break-up of plates if the explosion occurs on or near metal plates. An explosion's blast pressures at a position close to its source are considerably lower than they would be for a detonation; however, the high energy debris generated could cause munitions stored nearby to detonate.

f. Hazardous Fragment. For personnel, it is a fragment having an impact energy of 58 ft-lb (79 joules) or greater.

g. Munition. An energy-generating device used to inflict damage, including, but not limited to, such items as bombs, missiles, projectiles, torpedoes, mines, pyrotechnics, demolition charges, and special purpose devices.

h. Partial Detonation. A detonation taking place in only a part of a munition's explosive, forming a shock wave and fragmenting some of the case. The percentage of explosive that detonates determines the extent of damage inflicted by the partial detonation compared to what would be caused by full detonation.

i. Sympathetic Detonation. A detonation triggered by the nearby explosion of a like munition.

3. SPECIFIC TESTS, PROCEDURES, AND CRITERIA

a. Tests will be conducted with hardware equivalent to production items.

b. A munition passes a specific test when it exhibits reactions no more violent than the indicated criteria.

c. The tests described below are required for a munition to be insensitive.

Test	Procedure	Criteria
Fast Cook-off	MIL STD 1648	No reaction more severe than burning
Bullet Impact	DOD 6055.9	No reaction more severe than burning
Sympathetic Detonation	DOD 6055.9	No propagation

d. In addition to the tests common to all Services, there exist (or are being developed) IM tests that fulfill unique requirements of a particular Service; available tests that meet Service-unique requirements will be conducted. Development of criteria for other tests will continue to increase the insensitivity of munitions and, where appropriate, ultimately to achieve a technical criteria common to all Services.

Test	Procedure	Criteria
Slow Cook-off	DOD STD 2105	No reaction more severe than burning
Fragment Impact	To be determined	To be determined
Shaped Charge Jet	To be determined	To be determined
Spall	To be determined	To be determined
Electromagnetic Pulse	Assessment	To be determined
Electrostatic Discharge	Assessment	To be determined

Tab

C-963488

THE JOINT CHIEFS OF STAFF
WASHINGTON, D.C. 20318-7000

JOINT REQUIREMENTS
OVERSIGHT COUNCIL

05 December 1988

MEMORANDUM FOR THE JOINT LOGISTICS COMMANDERS

Subject: Insensitive Munitions Joint Requirement Revision

The Joint Requirements Oversight Council has reviewed the proposed revisions to the Joint Requirement for Insensitive Munitions and approves them as submitted. Recommend that these revisions be incorporated into the Joint Requirement as requested on 28 September 1988.

ROBERT T. HERRES
Vice Chairman
Joint Chiefs of Staff
Chairman, JROC

DISTRIBUTION:
1cy - OFFICIAL FILE
1cy - D11
1cy - 02B
1cy - J-7

DEPARTMENT OF THE NAVY
NAVAL SEA SYSTEMS COMMAND
WASHINGTON, D.C. 20362

IN REPLY REFER TO
8010
OPR 662
Ser 05/1314
24 Oct 1988

From: Commander, Naval Sea Systems Command
To: Chief of Naval Operations (OP-04L)

Subj: INSENSITIVE MUNITIONS JOINT REQUIREMENT

Ref: (a) OPNAV memo OP-04L1:JHM of 30 Sep 88

1. The enclosure to reference (a) document was reviewed with the following administrative changes suggested.

a. Add the following definition:

2.j. Threat Hazard Assessment. An evaluation of the munition life cycle environmental profile to determine the threats and hazards to which the munition may be exposed. The assessment includes threats posed by friendly munitions, enemy munitions, accidents, handling, etc. The assessment shall be based on analytical or empirical data to the extent possible. Reason: Definition was omitted.

b. Para 3.b. Change: "Threat Hazard Assessment" to "threat hazard assessment." Reason: Improper use of a proper noun.

c. Para 3.c. Change: "... DOD-STD-2105A (DRAFT) of June 1988 ..." to "... DOD-STD-2105A (DRAFT) of October 1988 ..." Reason: The draft of October 1988 is the final version of DOD-STD-2105A submitted to the military standard approval system.

2. The point of contact for this matter is Mr. Donald Porada, SEA 6622, extension 28728.

R. H. Ailes

R. H. AILES
Deputy Director for
Weapons & Combat Systems

Copy to:
COMNAVAIRSYSCOM (AIR 540)

DEPARTMENT OF THE ARMY
HEADQUARTERS US ARMY MATERIEL COMMAND
5001 EISENHOWER AVE., ALEXANDRIA, VA. 22333-0001

DEPARTMENT OF THE NAVY
DEPUTY CHIEF OF NAVAL OPERATIONS (LOGISTICS)
WASHINGTON, DC 20350-2000

DEPARTMENT OF THE AIR FORCE
HEADQUARTERS AIR FORCE LOGISTICS COMMAND
WRIGHT-PATTERSON AFB, OHIO 45433-5001

DEPARTMENT OF THE AIR FORCE
HEADQUARTERS AIR FORCE SYSTEMS COMMAND
ANDREWS AFB, WASHINGTON, DC 20334-5000

JOINT LOGISTICS COMMANDERS

MEMORANDUM TO THE JOINT REQUIREMENTS OVERSIGHT COUNCIL

SUBJECT: Insensitive Munitions Joint Requirement

1. Our memorandum of 26 September 1986 states that our Joint Ordnance Commanders Group would develop the test procedures and pass/fail criteria that were identified as "To Be Determined" in the original Insensitive Munitions Joint Requirement. Those have been developed. The proposed pass/fail criteria are contained in the attached proposed revised tab to the joint requirement, whereas all insensitivity tests have been incorporated into a draft DOD-STD-2105A, Hazard Assessment Tests for Nonnuclear Ordnance.

2. The proposed revision also changes the pass/fail criteria for sympathetic detonation from "no propagation" to "acceptor munitions will not detonate." Also, the definitions for burning, deflagration reaction, detonation reaction, explosion reaction, and partial detonation reaction have been revised to agree with STANAG 4240, Liquid Fuel Fire Test for Munitions.

3. We request your concurrence with the enclosed tab and its incorporation into the Insensitive Munitions Joint Requirement.

Encl

LOUIS C. WAGNER, JR.
General, USA
Commander
U.S. Army Materiel Command

S. R. ARTHUR
Vice Admiral, USN
Deputy Chief of Naval Operations
(Logistics)

ALFRED G. HANSEN
General, USAF
Commander
Air Force Logistics Command

BERNARD P. RANDOLPH
General, USAF
Commander
Air Force Systems Command

28 September 1988

DEPARTMENT OF THE ARMY
U.S. ARMY ARMAMENT, MUNITIONS AND CHEMICAL COMMAND
ROCK ISLAND, IL 61299-6000

DEPARTMENT OF THE AIR FORCE
OGDEN AIR LOGISTICS CENTER
HILL AIR FORCE BASE, UT 84056-5609

DEPARTMENT OF THE NAVY
NAVAL SEA SYSTEMS COMMAND
WASHINGTON, DC 20362-5101

DEPARTMENT OF THE AIR FORCE
ARMAMENT DIVISION
EGLIN AIR FORCE BASE, FL 32542-5000

DEPARTMENT OF THE NAVY
U.S. MARINE CORPS
HEADQUARTERS MATERIEL DIVISION
WASHINGTON, DC 20380-0001

MEMORANDUM TO THE JOINT LOGISTICS COMMANDERS

SUBJECT: Insensitive Munitions Joint Requirement

1. Reference:

a. Joint Requirement for Insensitive Munitions, undated.

b. JLC Memorandum to Joint Requirements Oversight Council, Sep 86.

2. The Joint Ordnance Commanders Group was tasked to develop procedures and criteria identified as "To Be Determined" in the Joint Service Technical Criteria and Definitions for Insensitive Munitions, tab of reference 1a. These criteria has been developed and the procedures incorporated into draft DOD-STD-2105, Hazard Assessment Tests for Navy Nonnuclear Ordnance. Additionally, the definitions has been revised to agree with STANAG 4240, Liquid Fuel Fire Test for Munitions.

3. A proposed JLC transmittal memorandum forwarding the revised tab to the Joint Requirements Oversight Council is enclosed.

Encl

MARVIN D. BRAILSFORD
Major General, USA
Commander
U.S. Army Armament, Munitions
and Chemical Command

ROBERT H. AILES
Rear Admiral, USN
Deputy Commander, Weapons
and Combat System
Naval Sea Systems Command

CHARLES E. FOX, JR.
Brigadier General, USAF
Vice Commander
Ogden Air Logistics Center

STEPHEN M. McELROY
Brigadier General, USAF
Deputy Commander for Research
Development & Acquisition
Armament Division

J.H. ALEXANDER
Colonel, USMC
Deputy Commander
Marine Corps Research, Development and
Acquisition Command

TAB
JOINT SERVICE
TECHNICAL CRITERIA AND DEFINITIONS
FOR INSENSITIVE MUNITIONS

1. GENERAL

a. Purpose. This document delineates technical criteria associated with insensitive munitions (IM). It provides definitions, identifies tests, and establishes criteria for those tests.

b. Applicability. This document is applicable to all nonnuclear ordnance and explosive systems.

2. DEFINITIONS

a. Detonation Reaction (Type I). The most violent type of explosive event. A supersonic decomposition reaction propagates through the energetic material to produce an intense shock in the surrounding medium (e.g., air or water) and very rapid plastic deformation of metallic cases, followed by extensive fragmentation. All energetic material will be consumed. The effects will include large craters for munitions on or close to the ground, holing/plastic flow damage/fragmentation of adjacent metal plates, and blast overpressure damage to nearby structures.

b. Partial Detonation Reaction (Type II). The second most violent type of explosive event. Some, but not all, of the energetic material reacts as in a detonation. An intense shock is formed; some of the case is broken into small fragments; a ground crater can be produced, adjacent metal plates can be damaged as in a detonation, and there will be blast overpressure damage to nearby structures. A partial detonation can also produce large case fragments as in a violent pressure rupture (brittle fracture). The amount of damage, relative to a full detonation, depends on the portion of material that detonates.

c. Explosion Reaction (Type III). The third most violent type of explosive event. Ignition and rapid burning of the confined energetic material builds up high local pressures leading to violent pressure rupturing of the confining structure. Metal cases are fragmented (brittle fracture) into large pieces that are often thrown long distances. Unreacted and/or burning energetic material is also thrown about. Fire and smoke hazards will exist. Air shocks are produced that can cause damage to nearby structures. The blast and high velocity fragments can cause minor ground craters and damage (breakup, tearing, gouging) to adjacent metal plates. Blast pressures are lower than for a detonation.

d. Deflagration Reaction (Type IV). The fourth most violent type of explosive event. Ignition and burning of the confined energetic materials leads to nonviolent pressure release as a result of a low strength case or venting through cases closures (leading port/fuze wells, etc.). The case might rupture but does not fragment; closure covers might be expelled, and unburned or burning energetic material might be thrown about and spread the fire.

Pressure venting can propel an unsecured test item, causing an additional hazard. No blast or significant fragmentation damage to the surroundings; only heat and smoke damage from the burning energetic material.

e. Burning (Type V). The least violent type of explosive event. The energetic material ignites and burns non-propulsively. The case may open, melt or weaken sufficiently to rupture nonviolently, allowing release of the combustion gases. Debris stays mainly within the area of the fire. This debris is not expected to cause fatal wounds to personnel or be a hazardous fragment beyond 50 feet.

f. Energetic Material. A substance that is capable by chemical reaction of producing gas at such a temperature, pressure, and rate, that it can damage its surroundings. The term includes all liquid and solid materials described as high explosives, propellants, and pyrotechnics, even though some pyrotechnics may not produce reaction gases. Fuel-air explosives and explosives consisting of liquid fuels and oxidants are included when used in munitions.

g. Hazardous Fragment. For personnel, it is a fragment having an impact energy of 58 ft-lb (79 joules) or greater.

h. Munition. An energy-generating device used to inflict damage, including, but not limited to, such items as bombs, missiles, projectiles, torpedoes, mines, pyrotechnics, demolition charges, and special purpose devices.

i. Sympathetic Detonation. A detonation triggered by the nearby explosion of a like munition.

3. SPECIFIC TESTS, PROCEDURES, AND CRITERIA

a. Tests will be conducted with hardware equivalent to production items. If hardware used varies from production configuration, the test plan should indicate reason(s) for deviation.

b. The definitions listed in section 2 give guidance for classification of munition reaction levels. A munition passes a specific test when it exhibits reactions no more violent than the indicated criteria.

Test	Criteria
Fast Cook-Off	No reaction more severe than burning
Bullet Impact	No reaction more severe than burning
Sympathetic Detonation	Acceptor munitions will not detonate
Fragment Impact	No reaction more severe than burning
Slow Cook-Off*	No reaction more severe than burning

Shaped Charge Jet*	No detonation
Spall*	No sustained burning

*These tests are required unless determined not to be credible threats via Threat Hazard Assessment.

c. The test procedures described in DOD-STD-2105A (DRAFT) of June 1988 apply, pending finalization of DOD-STD-2105A.

THE JOINT STAFF
WASHINGTON, DC

ZIP Code Reply:
20318-8000

22 March 2005

MEMORANDUM FOR: MR. ANTHONY MELITA, DEPUTY DIRECTOR, LAND WARFARE AND MUNITIONS, DEFENSE PENTAGON WASHINGTON, DC 20301-3015

Subject: Insensitive Munitions Strategic Plan Review Guidance for Joint Service Insensitive Munitions Technical Panel (JSIMTP) Members

1. Your memo on 21 Jul 2004 required that all Program Executive Officers (PEOs) with weapon responsibilities develop and present an annual insensitive munitions (IM) strategic plan to the JROC and OUSD (AT&L). The plans were due to the JROC on 15 Feb 2005 and are the vehicle to submit and consolidate IM waiver requests.

2. The JROC and OSD have expressed the desire that the JSIMTP review and provide comments on each PEO's strategic plan, just as they have reviewed and commented on individual Service IM waiver requests. The role of the JSIMTP in the review process of IM waivers has been to provide comments solely on the technical approach taken by the program office and to recommend any other mature technologies pertaining to that weapon system. Decisions, such as budget and schedule associated with the execution of the IM Technology Program, are left to the Services to provide advice to the JROC.

3. The JSIMTP role in reviewing all of the PEO's IM strategic plans must be expanded to include all technical aspects of the plan. I request that the JSIMTP review each plan to ensure all key elements, as described in your memo, have been addressed. These key elements include the following points as baseline:

a. General Overview of the Strategic Plan - Did the PEO's strategic plan address all the key points?

b. Review of the PEO Portfolio and IM investment priorities - Did the strategic plan cover the entire portfolio to include prioritization criteria? If not, were there adequate discussion or technical reasons why not?

c. Description of Methodology - What methodology was used to establish the priority list of munitions? Include discussion of the definitions used. How were the criteria and prioritization established?

d. Drawing the Priority Line - How many items have active/funded POA&Ms? Is there justification for "drawing the line?" How much IM investment is included to support above the line POA&Ms?

e. Unfunded IM Requirements - Has the PEO identified unfunded IM technology efforts that could be used to support incrementally improving the IM performance of current weapon systems? Are the identified unfunded requirements for support of items above the line or below the line?

f. POA&M's - POA&M documents should be viewed as individual IM waiver documents. The JSIMTP should provide comments based on the technical approach taken by the program office and the availability of any other technologies pertaining to that weapon system.

4. Joint Staff (J-4) will forward the PEO strategic plans to the JSIMTP for review soon after receipt. I recommend the JSIMTP comment within 90 days.

Barry E. Fridling

Barry E. Fridling, Ph. D., SES
Force Protection Functional Capabilities
Board Chairman

Copy to:

Secretaries Of The Military Departments
Attn: Acquisition Executives
SOCOM Acquisition Executive
Joint Staff (J-4)
Missile Defense Agency
Chairman, DOD Explosives Safety Board
Chairman, Joint Service Insensitive Munitions Technical Panel

THE JOINT STAFF
WASHINGTON, D.C. 20318-8000

JOINT REQUIREMENTS OVERSIGHT COUNCIL

JROCM 005-07
4 January 2007

MEMORANDUM FOR: Under Secretary of Defense for Acquisition, Technology, and Logistics
Director, Force Structure, Resources, and Assessment, Joint Staff
Program Executive Officer for Missiles and Space

Subject: DOD FY 2007 - 2008 Insensitive Munitions Strategic Plan

1. The Joint Requirements Oversight Council (JROC) approves the DOD FY 2007 - 2008 Insensitive Munitions Strategic Plan. In addition, the JROC requests an update on the Surface-Launched Advanced Medium Range Air-to-Air Missile and the Guided Multiple Launched Rocket System Insensitive Munitions Plans of Action and Milestones by March 2007.

2. Additionally, the JROC approves the following administrative measures to make the planning process more efficient:

a. Change CJCSI 3170 to eliminate Joint Capabilities Integration and Development System Insensitive Munitions Certification; and

b. Change periodicity for Insensitive Munitions Strategic Plan to two years starting with the FY 2009/2010 Insensitive Munitions Strategic Plan.

E. P. GIAMBASTIANI
Admiral, US Navy
Vice Chairman
of the Joint Chiefs of Staff

Copy to:
Vice Chief of Staff, US Army
Vice Chief of Naval Operations
Vice Chief of Staff, US Air Force
Assistant Commandant of the Marine Corps

OFFICE OF THE UNDER SECRETARY OF DEFENSE

3000 DEFENSE PENTAGON
WASHINGTON, DC 20301-3000

ACQUISITION,
TECHNOLOGY
AND LOGISTICS

JUL 3 2001

MEMORANDUM FOR SECRETARIES OF THE MILITARY DEPARTMENTS
ATTN: INSENSITIVE MUNITIONS EXECUTIVE AGENTS
SOCOM INSENSITIVE MUNITIONS EXECUTIVE AGENT
JOINT STAFF (J-4/SMPD)
CHAIRMAN, DOD EXPLOSIVES SAFETY BOARD

SUBJECT: Insensitive Munitions Compliance for Small Arms Ammunition

Small Arms Ammunition, defined as .50 caliber and smaller and including all shotgun shells, were defined as a family of munitions for the purpose of assessing the insensitive munitions (IM) compliance. The Army consented to being the Lead Executive Agent for all Small Arms Ammunition IM matters, and was officially so designated on April 11, 2001. The United States Army Tank-automotive and Armaments Command, Armament Research, Development, and Engineering Center conducted tests and assessments in accordance with Military Standard 2105B that determined that Small Arms Ammunition, with no incendiary or high explosive projectiles, are compliant with Department of Defense (DoD) Regulation 5000.2-R IM requirements. The DoD IM Integrated Product Team and Joint Services IM Technical Panel both concurred with that assessment. The Offices of the Acquisition Executive of the respective Military Departments and the Special Operations Command concurred with this assessment along with the Joint Staff J-4, Chairman of the DoD Explosives Safety Board, and the Director of Acquisition Resources and Analysis.

Therefore, the current inventory of Small Arms Ammunition and all future similar technology Small Arms Ammunition, with no incendiary or high explosive projectiles, shall be deemed IM-compliant. Small Arms Ammunition currently under development, and any developed in the future, with incendiary or high explosive projectiles shall continue to have their IM compliance determined on a case-by-case basis.

Anthony J. Melita
Deputy Director
Strategic and Tactical Systems, Munitions

OFFICE OF THE UNDER SECRETARY OF DEFENSE

3000 DEFENSE PENTAGON
WASHINGTON, DC 20301-3000

ACQUISITION,
TECHNOLOGY
AND LOGISTICS

10 OCT 2003

MEMORANDUM FOR SECRETARIES OF THE MILITARY DEPARTMENTS
ATTN: INSENSITIVE MUNITIONS (IM) EXECUTIVE AGENTS
SOCOM IM EXECUTIVE AGENT
MISSILE DEFENSE AGENCY IM EXECUTIVE AGENT
JOINT STAFF (J-4/SAIL AND J-8/RAD)
CHAIRMAN, DOD EXPLOSIVES SAFETY BOARD

SUBJECT: Insensitive Munitions (IM) Compliance for Cartridge Actuated Devices and Propellant Actuated Devices (CAD/PAD)

The following CAD/PAD inventory families, defined in the attachment, comply with IM requirements in accordance with MIL-STD-2105B: Electric Initiated Devices; Delay Actuated Devices; Linear Explosive Devices; Explosive/Gas/Laser/Mechanical Actuated Devices; and PADs less than 0.5 pounds Net Explosive Weight (NEW).

The CAD/PAD Joint Program Office (JPO) coordinates CAD/PAD research, development, qualification, acquisition, logistics, demilitarization, and IM matters. Technical assessments made by the CAD/PAD JPO of the above CAD/PAD families demonstrate that the technologies are reasonably mature, consistently pass IM tests, and exhibit reactions less severe than the stimuli. The Department of Navy IM Council, the Joint Services IM Technical Panel, and the DoD IM IPT concur with that assessment.

Therefore, the above inventory of certified CAD/PAD items, and all qualified future items of the above CAD/PAD families consistent with the established technology, shall be deemed IM-compliant.

All other CAD/PAD families (such as Rocket Catapults; PADs equal to, or greater than, 0.5 pounds NEW; and Special Applications), items currently under development, and any developed in the future shall continue to have their IM compliance determined on a case-by-case basis as a part of the CAD/PAD qualification and certification process.

Glenn F. Lamartin
Director
Defense Systems

Attachment
As stated

Definitions

Aircrew Escape Propulsion Systems (AEPS) – a propellant actuated device (PAD) specifically designed for aircrew systems application. Most often associated with Navy usage.

Cartridge (CART) – an energy source utilizing one or more energetic materials

Cartridge Actuated Device (CAD) – a device releasing cartridge energy to perform a work function

Delay Actuated Devices – a family of CAD items releasing cartridge energy after a specified time delay to perform a work function

Electric Initiated Devices – a family of CAD items that uses electricity to initiate; an electro-explosive device (EED). An explosive or pyrotechnic component that initiates an explosive, burning, electrical, or mechanical train and is activated by the application of electrical energy (Source: http://www.dtic.mil/doctrine/jel/doddict/)

Explosive/Gas/Laser/Mechanical Actuated Devices – a family of CAD items initiated by explosive, gas, laser or mechanical cartridge energy to perform a work function

Linear Explosive Devices – a family of CAD items utilizing linear explosive energy to perform a work function

Net Explosive Weight (NEW) – the total weight of all high explosives and all propellants expressed in pounds. (Source: DoD 6055.9 - STD)

Propellant Actuated Device (PAD) – a rocket-powered device releasing controlled propellant energy to perform a work function.

Rocket Catapult (ROCAT) – a multi-phase device (typically two phase, catapult and rocket) to accelerate and sustain thrust on an ejection seat

Special Applications – all other CAD items, not fitting the above families. Typical items include automatic inflation devices, passive anti-drown devices, thermal batteries, automatic release devices, and kits (collections of various CADs).

The United States has ratified this STANAG and it is approved for use. Actual promulgation by NATO is expected within one year. At that time, this document will be replaced by the promulgated version. Any U.S. comments or reservations are included in the following letter.

OFFICE OF THE UNDER SECRETARY OF DEFENSE

3000 DEFENSE PENTAGON
WASHINGTON DC 20301-3000

ACQUISITION AND TECHNOLOGY

June 10, 2002

MEMORANDUM FOR U.S. MISSION TO NATO, ARMAMENTS COOPERATION DIVISION (ARMY ARMAMENTS OFFICER), PSC 81, APO AE 09724

SUBJECT: Draft STANAG 4240 (EDITION 2) – "LIQUID FUEL / EXTERNAL FIRE, MUNITION TEST PROCEDURE "

Reference document, AC/310-D/193, 12 December 2001, SAB.

The U.S. Armed Forces ratifies the referenced agreement.

Ratification and implementation details are as follows:

	IMPLEMENTATION					
	Forecast Date			Actual Date		
RATIFICATION REFERENCE	NAVY	ARMY	AIR FORCE	NAVY	ARMY	AIR FORCE
Memo, OUSD(A&T) DATED AS ABOVE		June 10, 2002			June 10, 2002	

NATIONAL IMPLEMENTING DOCUMENT: MIL-STD-2105C

RESERVATIONS: None

COMMENTS: None

The point of contact is Mr. James E. Elliott, DSN 880-3047, commercial (973) 724-3047.

Anthony J. Melita
U.S. Key Delegate
AC/310 Main Group

CF:

Mr. Don Porada, Naval Ordnance Safety & Security Activity, Code N6, 23 Strauss Avenue, Bldg D-323, Indian Head, MD 20640-5555

Mr. James Lewis, Air Armament Center, AAC/SES, 1001 North 2nd Street, Suite 366, Eglin AFB, FL 32542-6838

Mr. James Elliott, U.S. Army Armament Research, Development & Engineering Center (ARDEC), AMSTA-AR-QAW-S, Picatinny Arsenal, NJ 07806-5000

Dr. Ruth Doherty, Naval Surface Warfare Center, Indian Head Division, Code 920T, 101 Strauss Ave, Indian Head, MD 20640-5035

Mr. Chris Janow, U.S. Army Armament Research, Development & Engineering Center (ARDEC), AMSTA-AR-CCZ, Picatinny Arsenal, NJ 07806-5000

Mr. Stephen N. Tanner, Naval Air Warfare Center, Code 476400D, China Lake, CA 93555-6001

Mr. Sami Hoxha, U.S. Army Armament Research, Development & Engineering Center (ARDEC), AMSTA-AR-QAW-S, Picatinny Arsenal, NJ 07806-5000

Mr. Homesh Lalbahadur, U.S. Army Armament Research, Development & Engineering Center (ARDEC), AMSTA-AR-CCF-D, Picatinny Arsenal, NJ 07806-5000

Mr. Herbert Egbert, U.S. Army Developmental Test Command, CSTE-DTC-TT-M, 314 Longs Corner Road, Aberdeen Proving Ground, MD 21005-5055

Mr. Brent Knoblett, DOD Explosives Safety Board, Room 856C, Hoffman Bldg I, 2461 Eisenhower Ave, Alexandria, VA 22331-0600

Dr. Jerry Ward, DOD Explosives Safety Board, Room 856C, Hoffman Bldg I, 2461 Eisenhower Ave, Alexandria, VA 22331-0600

Doctrine Division (C426), Marine Corps Combat Development Center, 3300 Russell Road, Suit 318A, Quantico, VA 22134-5021

HQUSAF/SAF/IAQ, 1500 Wilson Blvd, 9th Floor, Arlington, VA. 22209

Mr. R. Sladden, Armaments CO-Operation Section, Defence Support Division, NATO Headquarters, Avenue Leopold III, 1110 Brussels, Belgium

NORTH ATLANTIC COUNCIL
CONSEIL DE L'ATLANTIQUE NORD

12 December 2001

DOCUMENT
AC/310-D/193

**GROUP ON SAFETY AND SUITABILITY FOR SERVICE (S3)
OF MUNITIONS AND EXPLOSIVES (AC/310)**

CNAD PARTNERSHIP GROUP (CPG)

**RATIFICATION DRAFT 1 - STANAG 4240 (EDITION 2)
LIQUID FUEL / EXTERNAL FIRE, MUNITION TEST PROCEDURES**

Memorandum by the Assistant Secretary General for Defence Support

(RATIFICATION REQUEST)

Reference: PfP(CPG-S/3-SG/3)DS/8 dated 30 November 2001

1. The Group on Safety and Suitability for Service of Munitions and Explosives, Sub-Group 3, approved, at reference, draft STANAG 4240 (Edition 2) for issue for ratification.

2. In line with the decision of the Group, the agreed text is herewith forwarded to delegations of NATO nations who are requested to obtain the national ratification by 15 June 2002. The delegations are asked to inform the Defence Support Division of their national Ratification references, together with a statement of the date by which national implementation is intended to be effective, using the ratification response form at Annex. The service or services within which the standard applies should be indicated.

3. Most national Ministries of Defence contain a standardization office or standardization liaison officer who can give advice on the procedure to be adopted to obtain a formal ratification reference. It is recommended that contact be made with that office.

4. As soon as sufficient ratifications have been received, this STANAG will be forwarded for promulgation.

(Signed) R. G. BELL

Enclosure: Stanag 4240 (Edition 2)
1 Annex

Action Officer: R. Sladden
Original: English
G:\Docum\AC310\AC310 STANAGs=AOPs\Stanags-AOPs Rati Rqt\198E4240 Ed2-NU.doc

Enclosure to
AC/310-D/198

STANAG 4240
(Edition 2)
(Ratification Draft 1)

NORTH ATLANTIC TREATY ORGANIZATION
(NATO)

NATO STANDARDIZATION AGENCY
(NSA)

STANDARDIZATION AGREEMENT
(STANAG)

SUBJECT: LIQUID FUEL / EXTERNAL FIRE, MUNITION TEST PROCEDURES

Promulgated on 2001

Jan H ERIKSEN
Rear Admiral, NONA
Director, NSA

Enclosure to
AC/310-D/198

STANAG 4240
(Edition 2)
(Ratification Draft 1)

RECORD OF AMENDMENTS

No.	Reference/date of amendment	Date entered	Signature

EXPLANATORY NOTES

AGREEMENT

1. This NATO Standardization Agreement (STANAG) is promulgated by the Director, NSA under the authority vested in him by the NATO Military Committee.

2. No departure may be made from the agreement without consultation with the tasking authority. Nations may propose changes at any time to the tasking authority where they will be processed in the same manner as the original agreement.

3. Ratifying nations have agreed that national orders, manuals and instructions implementing this STANAG will include a reference to the STANAG number for purposes of identification.

DEFINITIONS

4. Ratification is "In NATO Standardization, the fulfilment by which a member nation formally accepts, with or without reservation, the content of a Standardization Agreement" (AAP-6).

5. Implementation is "In NATO Standardization, the fulfilment by a member nation of its obligations as specified in a Standardization Agreement" (AAP-6).

6. Reservation is "In NATO Standardization, the stated qualification by a member nation that describes the part of a Standardization Agreement that it will not implement or will implement only with limitations" (AAP-6).

RATIFICATION, IMPLEMENTATION AND RESERVATIONS

7. Page (iii) gives the details of ratification and implementation of this agreement. If no details are shown it signifies that the nation has not yet notified the tasking authority of its intentions. Page (iv) (and subsequent) gives details of reservations and proprietary rights that have been stated.

FEEDBACK

8. Any comments concerning this publication should be directed to NATO/NSA - Bvd Leopold III, 1110 Brussels - BE.

Enclosure to
AC/310-D/198

STANAG 4240
(Edition 2)
(Ratification draft 1)

RATIFICATION AND IMPLEMENTATION DETAILS
STADE DE RATIFICATION ET DE MISE EN APPLICATION

NATION / PAYS	NATIONAL RATIFICATION REFERENCE REFERENCE DE LA RATIFICATION NATIONALE	NATIONAL IMPLEMENTING DOCUMENT DOCUMENT NATIONAL DE MISE EN APPLICATION	IMPLEMENTATION/MISE EN APPLICATION					
			INTENDED DATE OF IMPLEMENTATION DATE ENVISAGEE DE MISE EN APPLICATION			DATE IMPLEMENTATION WAS ACHIEVED DATE EFFECTIVE DE MISE EN APPLICATION		
			NAVY MER	ARMY TERRE	AIR	NAVY MER	ARMY TERRE	AIR
BE								
CA								
CZ								
DA								
FR								
GE								
GR								
HU								
IT								
LU								
NL								
NO								
PL								
PO								
SP								
TU								
UK								
US								

Enclosure to
AC/310-D/198

STANAG 4240
(Edition 2)
(Ratification Draft 1)

RESERVATIONS/RESERVES

Enclosure to
AC/310-D/198

STANAG 4240
(Edition 2)
(Ratification draft 1)

NAVY/ARMY/AIR

NATO STANDARDIZATION AGREEMENT (STANAG)

LIQUID FUEL / EXTERNAL FIRE, MUNITION TEST PROCEDURES

Annexes:

A. Specification for Standard Liquid Fuel /External Fire Test.
B. Specification For a Mini Fuel Fire (MFF) Test.

Related Documents:

AOP-38	Glossary of Terms and Definitions Concerning the Safety and the Suitability for Service of Munitions, Explosives, and Related Products.
AOP-39	Guidance on the Development, Assessment and Testing of Insensitive Munitions.
STANAG 4123	Methods to Determine and Classify the Hazards of Ammunition
STANAG 4439	Policy for Introduction, Assessment and Testing for Insensitive Munitions.
United Nations Document (UN) ST/SG/AC.10/11/ Rev 3/R.256	Recommendation on the Transport of Dangerous Goods Manual of Tests and Criteria (UN test 6c and 7g).

AIMS

1. The aims of the agreement are:

   a. To provide standard test procedures for assessing the reaction, if any, of munitions and weapon systems to heat fluxes which are typical of the fast heating likely to be generated within an incandescent flame envelope of a large liquid hydrocarbon fuel fire.

   b. To provide guidance on the selection between the Standard Liquid Fuel Fire Test and the Mini Fuel Fire Test.

AGREEMENT

2. Participating nations agree that the procedure incorporated in this STANAG will be used for assessing the reaction, if any, of munitions and weapon systems to heat fluxes which are typical of those likely to be generated within an incandescent flame envelope of a large liquid hydrocarbon fuel fire, and that national orders, manuals and instructions implementing this STANAG will include a reference to the STANAG number for purpose of identification. No departure may be made from the agreement without consultation with the tasking authority. Nations may propose changes at any time to the tasking authority where they will be processed in the same manner as the original agreement.

Enclosure to
AC/310-D/198

STANAG 4240
(Edition 2)
(Ratification Draft 1)

DEFINITIONS

3. For the purpose of this document, the definitions of terms to be used to describe test events are provided in AOP-38, STANAG 4439, and AOP-39.

GENERAL

4. Effort to minimise the reaction of munitions to fire and to maximise the time to this reaction is a continuing commitment of weapons designers in order that the safety of personnel and materiel will not be unduly jeopardised.

5. The objective of the selected fuel fire test is the determination of the reaction and time to reaction, of the munition(s) when subjected to a liquid fuel fire environment. This document addresses the accidental exposure of munitions and weapons systems to fire afloat and ashore, which is a recurring and significant safety problem.

DETAILS OF THE AGREEMENT

6. Application. This STANAG provides guidance and procedures for fuel fire tests. They should be conducted by participating nations as a part of the Insensitive Munition (IM) evaluation of munitions where required by STANAG 4439. They may also be used for Hazard Classification (HC) as required by STANAG 4123 and UN Document ST/SG/AC.10/11/ Rev 3/R.256, and other applications not covered by these STANAGs, but where the response of a munition to fuel fire is required to be known. When intended to satisfy both IM and HC requirements, the test plans should be coordinated with appropriate authorities in these two areas. The bonfire (with wood) is not a suitable test for IM purposes because of the typically long rise time of temperature (see paragraph 13).

TEST FACILITIES:

7. This document describes a standard Liquid Fuel/External Fire Test (see Annex A).

8. An alternative Mini Fuel Fire (MFF) Test (Annex B) is provided for use when fragment mapping is not required, but pollution considerations need to be considered.

9. In the standard liquid fuel/external fire test, the test specimen is surrounded by fuel rich flames from a large open hearth containing liquid fuel (see Annex A, paragraph 1). The large horizontal dimensions of the hearth ensure that the flames are fuel rich and hence heat transfer to the test specimen is approximately 90% radiative.

10. Fuel rich flames and 90% radiative heat transfer are achieved in the MFF by placing baffles around the much smaller hearth to restrict oxygen input.

11. Where desired the MFF may be used to minimise pollution. Limitations on its use are as follows:

a. Size of test specimen. The test specimen must not be larger than 630 mm in any dimension nor exceed 50 kg in mass.

b. Anticipated response from test specimen. If it is likely that the response of the test specimen will be Type IV or V and that this response can be distinguished in a baffled enclosure from that of a Type I, II or III response (see AOP-39), then the smaller facility may be used. If this distinction is not known, or may not be possible, the standard liquid

fuel/external fire test facility should be used. Consideration should also be given to the possibility of the event causing significant damage to the MFF facility.

c. The MFF test facility does not permit accurate measurement of overpressure and fragment lethality that is essential in discriminating between the Type IV and Type V reactions, and for the purpose of HC. If data on these aspects are required, the test-item should be subjected to a standard liquid fuel/external fire test.

d. The requirements of the test range authority will also need to be taken into account.

12. Limitations. The fuel fire tests are designed only to simulate the most intense heating conditions likely to be created in a hydrocarbon fuel fire. They do not, however, simulate a particular in-service or accident scenario.

13. Special Notes. Explosive-filled test items involved in less intense fires, or exposed to lower rates of heating, may well remain quiescent for longer periods of time, but the magnitude of any resulting explosive event may be more violent than one from exposure to high heating rates, because of more explosive materials reaching hazardous temperatures while still confined in an unbreached enclosure.

14. Data obtained from this test MUST NOT be factored with respect to either temperature or time in order to derive forecasts of performance in other situations which may involve lower temperature or heat flux levels. Rates of heat flow and thermal gradients within complex assemblies can become non-linear when changes of state and / or the loss of integrity of internal structures and components occur.

15. Standard Test Item. The test item must be to the full production standard, although non-explosive sections of the item need only be geometrically and thermally representative. For all-up rounds that contain more than one major energetic component (such as rocket motors and warheads), the energetic components may be tested either individually or as an all-up round. For HC purposes, test the configuration to be hazard classified.

16. The use of simulants, dummy units or structures may result in a change in the heat flow patterns expected for the actual service item. Simulants may have different thermal properties than normal service items. Accordingly, any simulants used must exhibit closely comparable behaviour to that of the items they represent.

17. Similarly, complex electronic units should be thermally simulated only if it can be demonstrated independently that there is no possibility of the fire environment causing the unit to produce a spurious signal capable of initiating a firing circuit.

18. Development standard items may be used to effect preliminary assessments of thermal responses.

19. Where it is determined that only packaged items will be exposed to accidental liquid fuel fires in the service environments (including storage, transport and processing), tests should be conducted with the test item in the packaged configuration. If the test is (also) to be used for Hazard Classification, an agreement must be reached between HC and Safety Authorities on the number of test items, their configuration (packaged or unpackaged), and the number of tests to be performed.

Enclosure to
AC/310-D/198

STANAG 4240
(Edition 2)
(Ratification Draft 1)

TEST REQUIREMENTS

20. The test consists of engulfing the munition in a fuel fire and recording its reaction as a function of time. The munition is suspended above the burning fuel and the test is terminated upon completion of the reaction(s) of the munition.

EVALUATION OF TEST RESULTS

21. Guidance is given in:

a. UN Document ST/SG/AC.10/11/ Rev 3/R.256Recommendation on the Transport of Dangerous Goods Manual of Tests and Criteria (UN tests 6c and 7g);

b. STANAG 4439, Policy for Introduction, Assessment and Testing for Insensitive Munitions.

c. AOP-39, Guidance on the Development, Assessment and Testing of Insensitive Munitions.

IMPLEMENTATION OF THE AGREEMENT

22. This STANAG is considered to be implemented by a nation when that nation has issued the necessary orders / instructions:

a. that all future munitions and weapon systems will be assessed / tested in accordance with this agreement;

b. to provide its NATO forces with the details in this agreement with reference to this STANAG.

23. Data developed in accordance with this STANAG shall be made available to other NATO Nations participating in a collaborative weapon development or procurement program, upon receipt of a request submitted through appropriate National channels.

Enclosure to
AC/310-D/198

ANNEX A to
STANAG 4240
(Edition 2)
(Ratification draft 1)

SPECIFICATION FOR STANDARD LIQUID FUEL / EXTERNAL FIRE TEST

1. Guidance for the use of this Annex is given in paragraphs 7-19 of the STANAG.

2. Hearth Requirements. The hearth shall be large enough to allow at least 1m clearance on each side of the test item, and designed to provide a volume of flame which completely engulfs the test item throughout the trial.

3. Hearth. Liquid fuel is normally contained within a specifically prepared, polyethylene-lined, pan or hearth. The simplest design of pan or hearth can consist of a shallow, level pit, or a leveled area surrounded by a wall or embankment. The depth of the pit, or height of the wall or embankment, shall be sufficient to contain the required amounts of fuel and water as determined from paragraphs 5 and 6 of this Annex. The depth of the pit shall not block fragment projection.

4. Fuel. Suitable liquid hydrocarbon fuels are: JP-4, JP-5, Jet A-1, AVCAT (NATO F-34 or F-44), or commercial kerosene (Class C2 /NATO F-58).

5. Fuel Quantity. The quantity of fuel should be sufficient to maintain a fully developed fire for the specified period, which shall be 150% of the estimated time to reaction. Water (from a low pressure hose) may be added, as required, to raise the fuel level to the correct distance below the test item, but the quantity of fuel over the water must be greater than 15 mm at all times during the test to prevent boiling of the water due to radiation from the fire.

6. Calculation. As a general guide in calculating quantities of fuel, the rate of fuel surface regression due to combustion for all the required fuels and all sizes of hearth can be taken as 7mm/minute.

7. Position and Mounting of the Test Item. Unless otherwise specified by the Design or Test Authority, the test item shall be centred within the hearth area with its major axis horizontal. The lower surface of the test item should be high enough above the initial fuel surface to

a. allow full combustion below the test item;

b. not unduly increase the chance of occasional emergence of the test item from the flame envelope.

In order to ensure the test item is not positioned in a cooler, fuel-rich area of the flame, the position shall satisfy the temperature requirements of paragraph 12 of this Annex. As a guide, the initial height of the bottom of the test item above the fuel surface shall be no less than 0.3 meters at the start of the test. Note: For Hazard Classification the test item must be tested in its logistical configuration.

8. Suspension and Support of Store. The methods used to position and hold the test item within the fire hearth could have a very significant effect on its response to the fire environment. Unless otherwise specified, the test item shall be realistically supported such that when positioning as in paragraph 7 of this Annex, any sagging would represent that which would occur in an actual incident.

9. Support Stands. Any additional support stands or props should make only minimum line contact with the test item and must not screen it from the enveloping fire. The number of such extra supporting points must be kept to a minimum and should, where practical, be confined to positions where the casing of the test item is thickest.

10. Constraints. For test items that may become propulsive and compromise range safety, consider adequate means of constraint. Where necessary, the restraining device should not unduly screen the test item from incoming heat radiation from the flames. The Design or Test Authority must approve details of any such restraining attachments.

11. Support Tray. If required, a perforated metal tray or grid may be arranged below the test item and extending sufficiently (1m) on all sides, so that if the test item collapses, or its contents fall out, such items will be held to remain partially exposed to the fire. The design, construction and position of such a tray is at the discretion of the Design or Test Authority, but must be adequate to support the weight and impact of falling items. Preferably, the positioning of such a tray or grid prior to initiation of the fire should be about 50mm below the fuel surface so that it retains its strength and does not affect the combustion of the fuel.

12. Test (Flame) Requirements. An average flame temperature of at least 800°C, as measured by all valid thermocouples (sample rate > 0.2 Hz) at the test-item without contribution of the burning munition, will be considered a valid test. This temperature is determined by averaging the temperature from the time the flame reaches 550°C until all munition reactions are completed. Any deviation from this shall be recorded with appropriate time versus temperature data. The flame temperature shall reach 550°C in the order of 30 seconds after ignition as measured by any two of four flame thermocouples. The time (over a 30-second period) until flame temperature, as measured by the two thermocouples, reaches 550°C shall be subtracted from the time of reaction.

13. Ignition. To ensure a rapid, consistent build-up of flame area, the fuel should be ignited at the mid-point of one or more of the sides of the hearth by means of suitable remotely operated flame-producing devices fired simultaneously.

14. Flame Spread Rate. To enhance the rate of spread of the flame area, particularly in conditions of low ambient temperature, 20-30 litres of petrol (gasoline) are to be floated on the fuel at each of the ignition points. The time delay between placing of the petrol (gasoline) and ignition of the fire should be kept to a minimum to avoid excessive loss by evaporation and dispersion in the fuel. Initiation of the flame producing devices should ensure the best "all fire" probability. Suitable methods of remote ignition are:

a. A flame producing system that has been demonstrated to be effective and reliable consists of an electric igniter inserted into a small bagged powder charge.

b. A bundle of cotton waste (above 1-2 kg) is placed in the fuel at the midpoint of each side of the hearth. The petrol (gasoline) is poured over the waste, and the charge/igniter unit is place on the top of the bundles. The charges will still function even when completely soaked in petrol (gasoline) or kerosene, however do not allow rain to saturate the bundles.

15. Test Environment. Fire tests should not be conducted in the rain (which will cause heating problems), or when wind velocities in the test area (or inside wind barriers if such barriers are used) exceed 10 km/h, because this condition prevents full engulfment of the test item even when a wind barrier is used.

16. Thermal Insulation of Support and Restraining Rigs. Even substantial components of the support and restraining will lose a major portion of their strength within a few minutes of the full fire developing (components of wall thickness of 6 mm could reach 700°C within 2 min). To avoid unduly massive constructions, some form of thermal insulation should be applied to the structural members. A suitable material is a mineral wood fibre (density 80-100 kg/m^3). This is obtainable in the form of preformed sections and slabs of 25 mm thickness, which can readily be shaped as required. Glass fibre is not suitable as it melts at the temperature obtained within the fire. Where lagging is used, it must be kept dry until the last practical moment.

17. Instrumentation. To provide a consistent, remote indication of the full development of the fire, a minimum of 4 thermocouple elements are required. These thermocouples shall be mounted 40-60 mm from the surface of the test item at positions fore, aft, starboard and port along a horizontal plane through the centreline of the test-item. Data must be recorded every five-seconds or less (0.2 Hz). Additional thermocouples may be positioned at the discretion of the Trial Authority.

18. Thermocouples. Type K thermocouples (nickel-chromium/nickel-aluminium conductors), sheathed in inert hermetically sealed insulation and capable of withstanding 1200°C, have been successfully used to measure test temperatures.

19. Timing. The zero for the timing of hazardous events is the instant that any two of the temperature sensors reach 550°C. (This is an indication the test item has been enveloped by the fire.) Verification of the time and degree of envelopment can be obtained from a combination of cine-film or video, and a timing device).

20. The most satisfactory position for a camera/video is upwind of the fire on a tower.

21. Observations and Records. Unless noted as "optional," for IM and/or HC determination, the following minimum observations are to be made and records kept:

a. Test item identification (model, serial numbers, number of test items, etc.);

b. A record of events versus time, from ignition of the fuel to the end of the trial;

c. The nature of any reactions by the test item;

d. The nature and distribution of residue and debris;

e. Wind velocities and direction inside and outside the enclosure before the trial, and any significant change in velocity/direction outside the enclosure (preferably well clear of the enclosure) during the trial;

f. Type of fuel for the test;

g. Thermocouple identification and locations;

h. Listing of environmental preconditioning test performed;

i. Type of energetic material and weight;

j. The geographic orientation of the test item's longitudinal axis;

k. Thermocouple data (versus time) for all sensors;

l. Indication of propulsion (video or other suitable means);

m. The temperatures at the recording points need to be continuously recorded. For the purpose of the test, simple direct-indicating meters are sufficient;

n. A microphone or other suitable listening device should be placed near the trial site to record audible events. The audio record shall be a sound track on the motion picture film, or on the videotape to enable correlation with visible events and indicated time;

o. Suitable blast or pressure gauges should be positioned around the test item;

p. Thermal flux measurements; (Optional for all but candidate HD 1.3 and 1.4 articles.)

q. Fragment recovery and mapping;

s. Witness screens as a measure of severity (optional).

22. The following photographic records and videos are to be made:

a. Still photographs of the test item before and after each trial;
b. Still photographs of any other residues arising as a result of the trial;
c. Colour cine-film or video for the duration of each trial.

Enclosure to
AC/310-D/198

ANNEX B to
STANAG 4240
(Edition 2)
(Ratification draft 1)

SPECIFICATION FOR A MINI FUEL FIRE TEST

1. Guidance for the use of this Annex is given in paragraphs 7-11 of the STANAG.

SPECIFICATION

2. The definitive drawing for the hearth, shown schematically in Figure 1, is UK P&EE(S) Drawing No 1 –RS-0034 Issue C entitled, "Mini Fuel Fire Mk2"; extracts are at Figures 2 and 3.

3. Hearth. The hearth consists of a 2m x 2m x 0.4m (deep) tank in 10 mm mild steel, and 4 removable wings loosely fitted to the tank by square hollow section steel posts in sockets at each corner. The 0.5 m vertical section of each wing above the lip of the tank is of heavy gauge expanded steel, as specified in Figure 4, framed in box section mild steel. Above this is a further 0.75m of 8mm mild steel plate, similarly framed but inclined inwards at 30° to the vertical, so as to form part of a short smokestack and downwards-facing black body radiator. The expanded steel section creates the air/fuel ratio necessary for fuel rich, soot-producing combustion.

4. Test Item Limitations. Physically the test item shall not exceed 630 mm in any dimension and shall not weigh more than 50 kg. Because there are no cost advantages in using the Mini Fuel Fire if the hearth were to be damaged severely as a consequence of the test, its use should be limited to stores predetermined as being unlikely to explode or detonate in the test, or whose Net Explosive Quantity is no more than would render acceptable minimal hearth damage after cook-off.

5. Positioning of Store. The store is to be placed symmetrically within the hearth with its major axis horizontal, such that its lower face is 375 - 425 mm above the initial fuel surface, unless otherwise specified.

6. Support Stand. The store is to be supported on a stand, which is sufficiently robust to prevent sagging or premature collapse. The stand is to make contact with the store in a way representative of a real incident, and must not screen the store from the surrounding fire. The number of additional supporting points must be kept to a minimum consistent with adequacy of support and should, wherever possible, be confined to the area of the store where the casing is thickest. An open mesh table in the same material as the lower wings appears suitable for most applications.

7. Restraints. Adequate means of constraint shall be provided to prevent stores that contain propellant from being displaced from the test position. Wherever practical, restraints should be confined to the thickest parts of the store casing and should not screen the store from incident radiation unduly.

8. Fuel. The liquid hydrocarbon fuel is to be AVCAT (NATO F-34 or F-35) or commercial kerosene Class C2 (NATO F-58) of sufficient quantity to cause a reaction of the store under test. An approximate burning rate of 5 mm depth / min has been established for this hearth.

9. Wind Limitations. To prevent local wind disturbances that could affect the fire symmetry, the ground surrounding the test site is to be reasonably flat and level. Trees, hedges or buildings must not be closer to the hearth than 20 times their height and, ideally, not closer than 30 times their height. Trials should not be attempted in prevailing wind speeds exceeding 10 km/h (5.5 knots), either steady or gusting. Additionally, if the wind speed in the centre of the hearth exceeds 5 km/h (2.8 knots), a steel windshield is to be placed upwind

against the hearth at an angle of 70° to the vertical. It is to be of 1.6 mm gauge, 1.8 m x 0.9 m, with the longest edge on the ground.

INSTRUMENTATION

10. Pressure Gauges. A suitable blast or pressure gauge is to be placed at the same height and 5 m from the centre of the store.

11. Thermocouple System. Four thermocouples are to be placed such that their junctions are at the same height as the centre of the store, and offset 40 – 60mm from each side. Remote indication of satisfactory full development of the fire is when any two of these thermocouples reach 550°C (time zero for measuring reaction time) within 30 seconds of ignition, and/or either the store has reacted or the arithmetic mean temperature of the four thermocouples reaches 800°C within two minutes. Verification of reaction time and satisfactory development of the fire can be taken from CCTV records. Additionally:

a. Further thermocouples may be positioned at the discretion of the trial authority.

b. Type K thermocouples (nickel-chromium/nickel-aluminium conductors), sheathed in inert hermetically sealed insulation, and capable of withstanding 1200°C, have been success fully used to measure data.

c. The connections between the thermocouples and extension cable or interface unit must be made at least 5 m from the hearth, and on the upwind or crosswind sides. Extension cables may be of plastic covered copper.

d. The temperatures of the thermocouples need to be monitored continuously. Simple direct indicating meters are sufficient for the purpose of this test. Automatic recording equipment should have a sampling rate of not less than once per second.

e. Sand filled bags have been found to give satisfactory protection to thermocouple cabling against ballistic fragments and heat resulting from the test. The Mini Fuel Fire hearth and wings in themselves offer considerable protection.

12. CCTV and Microphone. The most satisfactory position for a CCTV camera is at ground level, on a crosswind side, 15 m from the fire. The line of sight to the store is therefore inclined slightly upwards and through the expanded metal mesh of a wing. A single microphone, incorporated into the CCTV recording system, is to be placed near the store.

TEST ITEM STANDARD

13. For formal purposes the explosive store tested must be to the full production standard. However, the non-explosive sections may be replaced by thermal and geometric representations, provided they exhibit closely comparable behaviour throughout the test to the production standard non-explosive items.

14. Complex electronic units may be thermally simulated, but only if it can be demonstrated that there is no possibility of production of a spurious pulse capable of initiating a firing circuit.

15. Development standard items may be used for preliminary assessment of thermal responses.

16. Where it is assessed that only packaged items will be exposed to liquid fuel fire in the service environments (including storage, transport and processing), the tests should be conducted in the packaged configuration.

IGNITION

17. To ensure a rapid consistent build-up of the flame area, the fuel is to be ignited at diagonally opposite corners of the tank by means of two suitable remotely operated pyrotechnic devices fired simultaneously.

18. To enhance the rate of spread of the flame area, particularly in conditions of low ambient temperature, up to 10 litres of petrol (gasoline) may be floated on the fuel at each ignition point.

19. A flame producing system, which has been shown to be effective and reliable, consists of an electrically initiated igniter inserted into a small-bagged powder charge. Suitable military devices are:

a. Igniter S/F, Electric (ADAC No 51204-01);

b. Simulator shell burst (ADAC No 23502-04). Charge, bagged, 2 oz G12, No MK 2;

c. Simulator shell burst (ADAC No 23072-04). Charge, bagged, 4 oz NRN, No 12 MK 1.

20. A bundle of cotton waste (1-2kg), in which the charge/igniter unit has been folded into the top, is partially immersed in the fuel at both ignition points and the petrol (gasoline) is gently poured **over** the waste and charge/igniter units. The charges will function even when completely soaked in petrol (gasoline) although not so reliably when soaked with kerosene or AVCAT.

OBSERVATIONS AND RECORDS

21. The following minimum observations are to be made and records kept:

a. Test item identification (model, serial numbers, number of test items, etc.);

b. A record of events versus time from ignition of the fuel to the end of the trial;

c. The nature of any reactions by the test item;

d. The nature and distribution of residue and debris;

e. Wind velocities and direction inside and outside the enclosure before the trial, and any significant change in velocity/direction outside the enclosure (preferably well clear of the enclosure) during the trial;

f. Type of fuel for the test;

g. Thermocouple identification and locations;

h. Listing of environmental preconditioning test performed;

i. Type of energetic material and weight;

j. The geographic orientation of the test-item's longitudinal axis;

k. Audio record (in combination with high-speed video recording);

l. Thermocouple data (versus time) for all sensors;

m. Indication of propulsion (video or other suitable means).

22. The following photographic records and videos are to be made:

a. Still photographs of the test item before and after each trial;

b. Still photographs of any other residues arising as a result of the trial;

c. Colour cine-film or video for the duration of each trial.

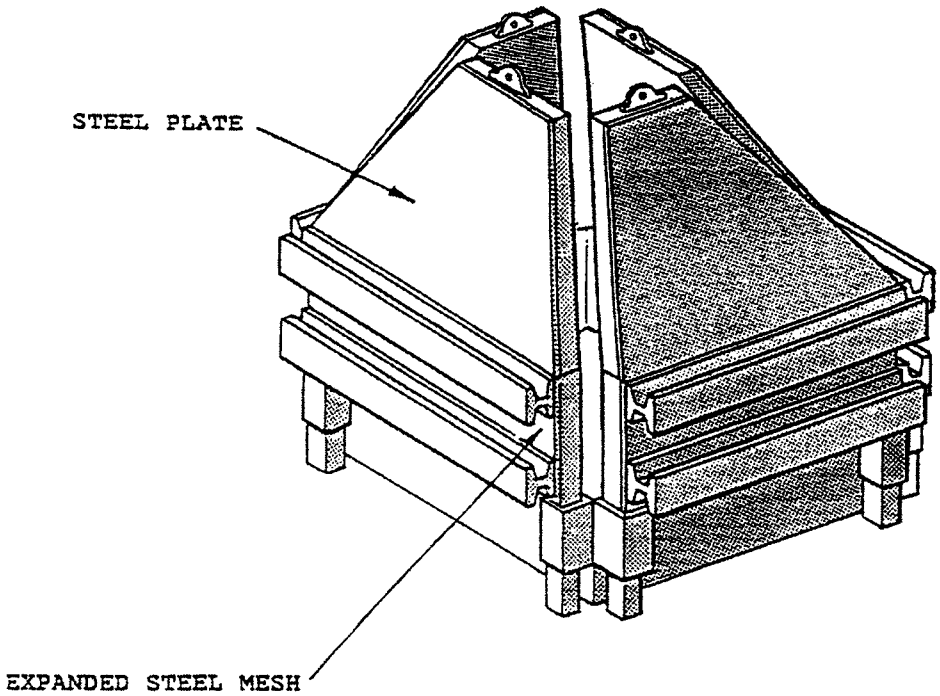

Figure 1a. General Arrangement (Schematic)

Enclosure to
AC/310-D/198

ANNEX B to
STANAG 4240
(Edition 2)
(Ratification Draft 1)

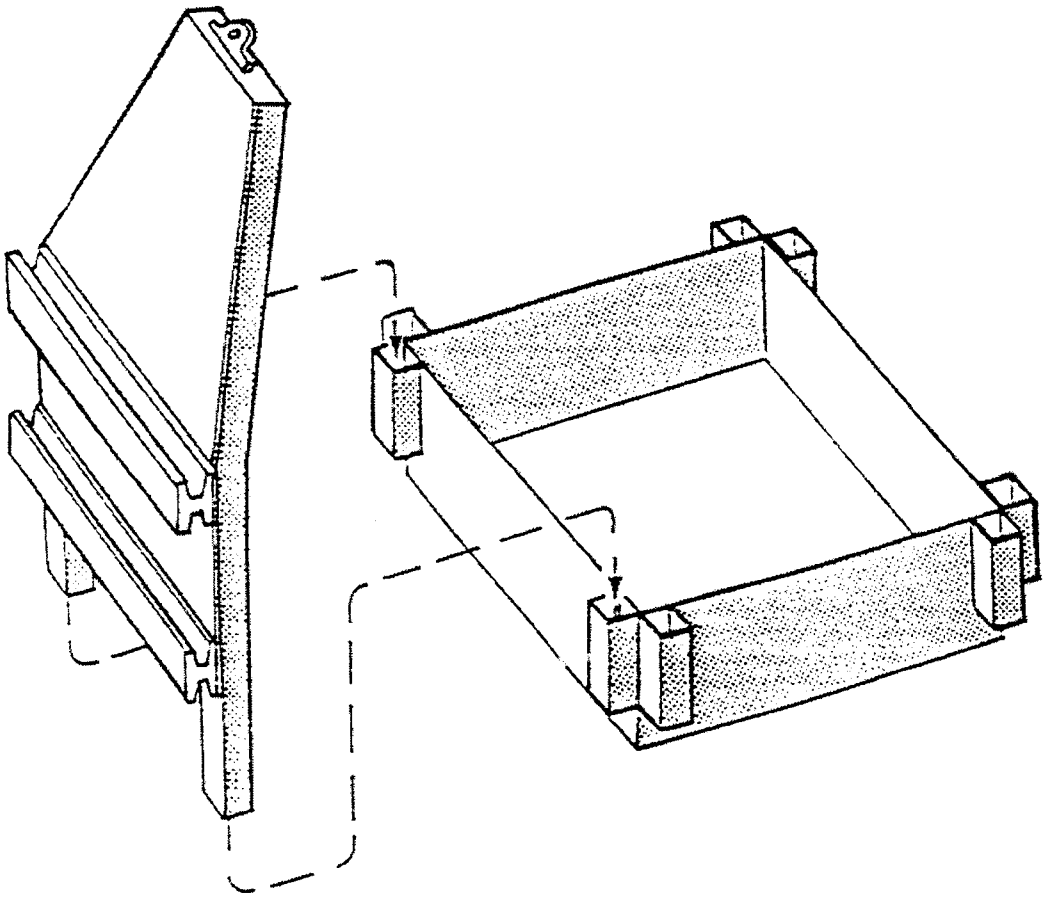

Figure 1 - GENERAL ARRANGEMENT
(Schematic)

Enclosure to
AC/310-D/198

ANNEX B to
STANAG 4240
(Edition 2)
(Ratification draft 1)

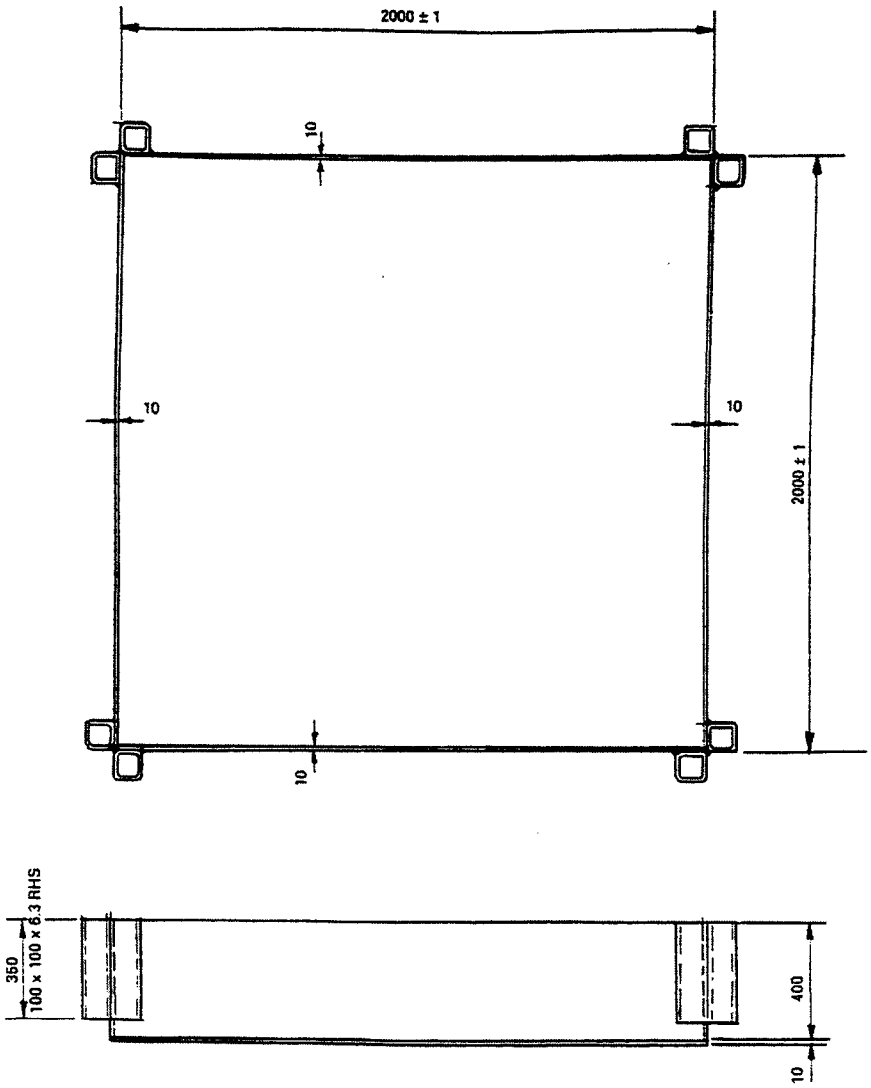

BASE TRAY

MATL:-10MM THK M.S. PLATE & 100 x 100 x 6.2 RHS

NOTE 1. ALL DIMENSIONS IN MM

2. FULLY WELDED CONSTRUCTION
WELDING PROCEDURE TO BS 5235
MMA ELECTRODES TO BS 635

Figure 2 - SPECIFICATION FOR A HEARTH TANK
(Not to scale)

Enclosure to
AC/310-D/198

ANNEX B to
STANAG 4240
(Edition 2)
(Ratification Draft 1)

(Not to scale)

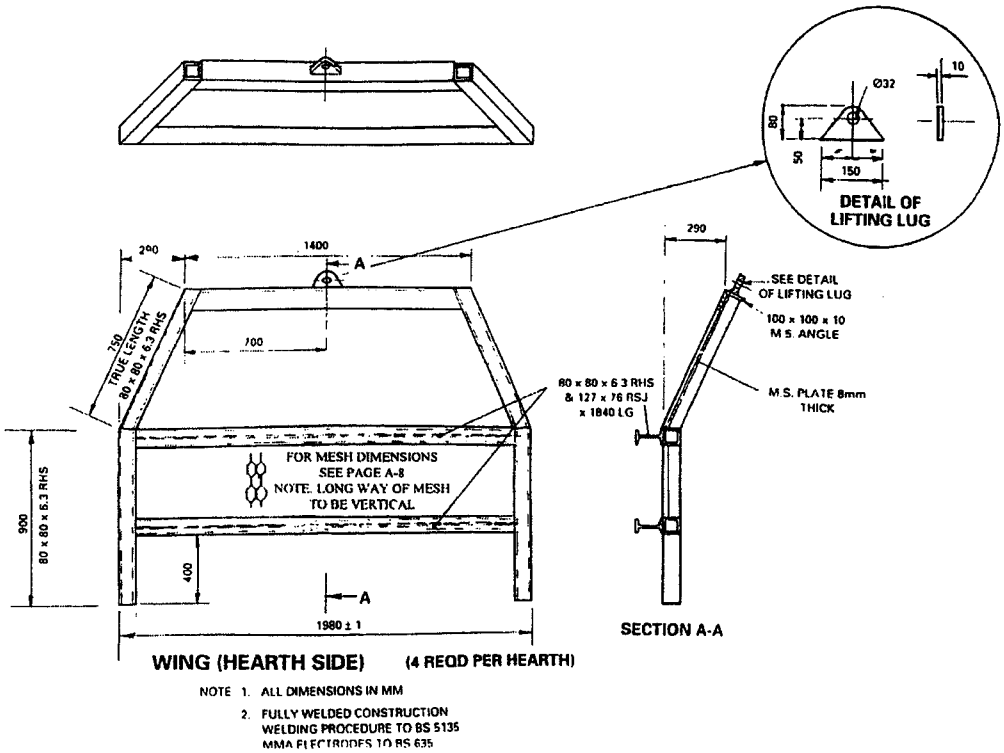

Figure 3. Specification For A Hearth Wing.

SPECIFICATION FOR A HEARTH WING - MESH SIZE

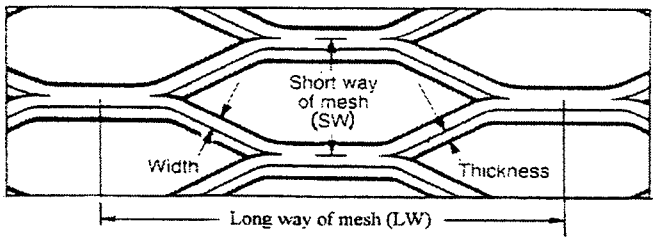

Material Type	Nominal Size of Aperture mm		Nominal overall thickness mm		Approx weight uncoated kg/m²
	LW	SW	Width	Thickness	
Carbon Steel	70	16	13	6.5	34

Figure 4. Specification For A Hearth Wing-Mesh Size.

ANNEXE au
AC/310- D/198

STANAG 4240
(Edition 2)
(Projet de ratification 1)

REPONSES DES PAYS CONCERNANT LA RATIFICATION ET LA MISE EN APPLICATION D'UN STANAG

(Référence nationale et date)

Au: Secrétaire général adjoint pour le Soutien de la défense,
OTAN, 1110 Bruxelles, Belgique

Objet: STANAG 4240 (Edition 2) - PROJET DE RATIFICATION 1 – INCENDIE DE CARBURANT LIQUIDE / INCENDIE EXTERNE, PROCEDURES D'ESSAI DES MUNITIONS

Référence: AC/310-D/193, daté du 12 décembre 2001

1. *(pays)* ratifie/ne ratifie pas(*) l'accord diffusé sous couvert du document cité en référence.

2. La référence de la ratification et les dates de mise en application sont les suivantes:

Référence et date de la ratification	Date envisagée de mise en application		
	MER	TERRE	AIR

3. DOCUMENT(S) NATIONAUX DE MISE EN APPLICATION:

4. RESERVES

5. AUTRES RENSEIGNEMENTS:

.....
(Signature)

The United States has ratified this STANAG and it is approved for use. Actual promulgation by NATO is expected within one year. At that time, this document will be replaced by the promulgated version. Any U.S. comments or reservations are included in the following letter.

OFFICE OF THE UNDER SECRETARY OF DEFENSE

3000 DEFENSE PENTAGON
WASHINGTON DC 20301-3000

ACQUISITION AND TECHNOLOGY

June 12, 2002

MEMORANDUM FOR U.S. MISSION TO NATO, ARMAMENTS COOPERATION DIVISION (ARMY ARMAMENTS OFFICER), PSC 81, APO AE 09724

SUBJECT: Draft STANAG 4382 (EDITION 2) – "SLOW HEATING, MUNITION TEST PROCEDURE "

Reference document, AC/310-D/197, 12 December 2001, SAB.

The U.S. Armed Forces ratifies the referenced agreement.

Ratification and implementation details are as follows:

	IMPLEMENTATION					
	Forecast Date			Actual Date		
RATIFICATION REFERENCE	NAVY	ARMY	AIR FORCE	NAVY	ARMY	AIR FORCE
Memo, OUSD(A&T) DATED AS ABOVE		June 12, 2002			June 12, 2002	

NATIONAL IMPLEMENTING DOCUMENT: MIL-STD-2105C

RESERVATIONS: None

COMMENTS: See attached DA Form 4797-R.

The point of contact is Mr. James E. Elliott, DSN 880-3047, commercial (973) 724-3047.

1 Encl. as

Anthony J. Melita
U.S. Key Delegate
AC/310 Main Group

CF:

Mr. Don Porada, Naval Ordnance Safety & Security Activity, Code N6, 23 Strauss Avenue, Bldg D-323, Indian Head, MD 20640-5555

Mr. James Lewis, Air Armament Center, AAC/SES, 1001 North 2nd Street, Suite 366, Eglin AFB, FL 32542-6838

Mr. James Elliott, U.S. Army Armament Research, Development & Engineering Center (ARDEC), AMSTA-AR-QAW-S, Picatinny Arsenal, NJ 07806-5000

Dr. Ruth Doherty, Naval Surface Warfare Center, Indian Head Division, Code 920T, 101 Strauss Ave, Indian Head, MD 20640-5035

Mr. Chris Janow, U.S. Army Armament Research, Development & Engineering Center (ARDEC), AMSTA-AR-CCZ, Picatinny Arsenal, NJ 07806-5000

Mr. Stephen N. Tanner, Naval Air Warfare Center, Code 476400D, China Lake, CA 93555-6001

Mr. Sami Hoxha, U.S. Army Armament Research, Development & Engineering Center (ARDEC), AMSTA-AR-QAW-S, Picatinny Arsenal, NJ 07806-5000

Mr. Homesh Lalbahadur, U.S. Army Armament Research, Development & Engineering Center (ARDEC), AMSTA-AR-CCF-D, Picatinny Arsenal, NJ 07806-5000

Mr. Herbert Egbert, U.S. Army Developmental Test Command, CSTE-DTC-TT-M, 314 Longs Corner Road, Aberdeen Proving Ground, MD 21005-5055

Mr. Brent Knoblett, DOD Explosives Safety Board, Room 856C, Hoffman Bldg I, 2461 Eisenhower Ave, Alexandria, VA 22331-0600

Dr. Jerry Ward, DOD Explosives Safety Board, Room 856C, Hoffman Bldg I, 2461 Eisenhower Ave, Alexandria, VA 22331-0600

Doctrine Division (C426), Marine Corps Combat Development Center, 3300 Russell Road, Suit 318A, Quantico, VA 22134-5021

HQUSAF/SAF/IAQ, 1500 Wilson Blvd, 9th Floor, Arlington, VA. 22209

Mr. R. Sladden, Armaments CO-Operation Section, Defence Support Division, NATO Headquarters, Avenue Leopold III, 1110 Brussels, Belgium

Comments to STANAG 4382E2

NO (a)	NATION (b)	PAGE (c)	PARA (d)	LINE (e)	COMMENT(S) (f)	REASON(S) (g)
1	U.S.	1	1.a.	2	**COMMENT:** Change to read as follows, '…thermal environment at a change rate of 3.3°C per hour''	Necessary to clarify the intent that the temperature of the munition must be raised at a rate of 3.3°C per hour.
2	U.S.	5	18.a.	2	**COMMENT:** Delete reference to UN test 7f. It should read as follows; (UN Test 7h)	UN test 7f should not be referenced because it is an EIDS test. Only UN test 7h is applicable to articles.

NORTH ATLANTIC COUNCIL
CONSEIL DE L'ATLANTIQUE NORD

NATO/PfP UNCLASSIFIED

12 December 2001

DOCUMENT
AC/310-D/197

**GROUP ON SAFETY AND SUITABILITY FOR SERVICE (S3)
OF MUNITIONS AND EXPLOSIVES (AC/310)**

CNAD PARTNERSHIP GROUP (CPG)

**RATIFICATION DRAFT 1 - STANAG 4382 (EDITION 2)
SLOW HEATING, MUNITIONS TEST PROCEDURES**

Memorandum by the Assistant Secretary General for Defence Support

(RATIFICATION REQUEST)

Reference: PfP(CPG-S/3-SG/3)DS/8 dated 30 November 2001

1. The Group on Safety and Suitability for Service of Munitions and Explosives, Sub-Group 3, approved, at reference, draft STANAG 4382 (Edition 1) for issue for ratification.

2. In line with the decision of the Group, the agreed text is herewith forwarded to delegations of NATO nations who are requested to obtain the national ratification by 15 June 2002. The delegations are asked to inform the Defence Support Division of their national Ratification references, together with a statement of the date by which national implementation is intended to be effective, using the ratification response form at Annex. The service or services within which the standard applies should be indicated.

3. Most national Ministries of Defence contain a standardization office or standardization liaison officer who can give advice on the procedure to be adopted to obtain a formal ratification reference. It is recommended that contact be made with that office.

4. As soon as sufficient ratifications have been received, this STANAG will be forwarded for promulgation.

(Signed) R. G. BELL

Enclosure: Stanag 4382 (Edition 2)
1 Annex

Action Officer: R. Sladden
Original: English
G:\Docum\AC310\AC310 STANAGs=AOPs\Stanags-AOPs Rati Rqt\197E4382 Ed2-NU.doc

Enclosure to
AC/310-D/197

STANAG 4382
(Edition 2)
(Ratification Draft 1)

NORTH ATLANTIC TREATY ORGANIZATION
(NATO)

NATO STANDARDIZATION AGENCY
(NSA)

STANDARDIZATION AGREEMENT
(STANAG)

SUBJECT: SLOW HEATING, MUNITIONS TEST PROCEDURES

Promulgated on 2001

Jan H ERIKSEN
Rear Admiral, NONA
Director, NSA

Enclosure to
AC/310-D/197

STANAG 4382
(Edition 2)
(Ratification Draft 1)

RECORD OF AMENDMENTS

No.	Reference/date of amendment	Date entered	Signature

EXPLANATORY NOTES

AGREEMENT

1. This NATO Standardization Agreement (STANAG) is promulgated by the Director, NSA under the authority vested in him by the NATO Military Committee.

2. No departure may be made from the agreement without consultation with the tasking authority. Nations may propose changes at any time to the tasking authority where they will be processed in the same manner as the original agreement.

3. Ratifying nations have agreed that national orders, manuals and instructions implementing this STANAG will include a reference to the STANAG number for purposes of identification.

DEFINITIONS

4. Ratification is "In NATO Standardization, the fulfilment by which a member nation formally accepts, with or without reservation, the content of a Standardization Agreement" (AAP-6).

5. Implementation is "In NATO Standardization, the fulfilment by a member nation of its obligations as specified in a Standardization Agreement" (AAP-6).

6. Reservation is "In NATO Standardization, the stated qualification by a member nation that describes the part of a Standardization Agreement that it will not implement or will implement only with limitations" (AAP-6).

RATIFICATION, IMPLEMENTATION AND RESERVATIONS

7. Page (iii) gives the details of ratification and implementation of this agreement. If no details are shown it signifies that the nation has not yet notified the tasking authority of its intentions. Page (iv) (and subsequent) gives details of reservations and proprietary rights that have been stated.

FEEDBACK

8. Any comments concerning this publication should be directed to NATO/NSA - Bvd Leopold III, 1110 Brussels - BE.

Enclosure to
AC/310-D197

STANAG 4382
(Edition 2)
(Ratification Draft 1)

RATIFICATION AND IMPLEMENTATION DETAILS
STADE DE RATIFICATION ET DE MISE EN APPLICATION

NATION / PAYS	NATIONAL RATIFICATION REFERENCE REFERENCE DE LA RATIFICATION NATIONALE	NATIONAL IMPLEMENTING DOCUMENT DOCUMENT NATIONAL DE MISE EN APPLICATION	IMPLEMENTATION/MISE EN APPLICATION					
			INTENDED DATE OF IMPLEMENTATION DATE ENVISAGEE DE MISE EN APPLICATION			DATE IMPLEMENTATION WAS ACHIEVED DATE EFFECTIVE DE MISE EN APPLICATION		
			NAVY MER	ARMY TERRE	AIR	NAVY MER	ARMY TERRE	AIR
BE								
CA								
CZ								
DA								
FR								
GE								
GR								
HU								
IT								
LU								
NL								
NO								
PL								
PO								
SP								
TU								
UK								
US								

Enclosure to
AC/310-D/197

STANAG 4382
(Edition 2)
(Ratification Draft 1)

NAVY/ARMY/AIR

NATO STANDARDIZATION AGREEMENT (STANAG)

SLOW HEATING, MUNITIONS TEST PROCEDURES

Annexes: None.

Related documents:

AOP-38	Glossary of Terms and Definitions Concerning the Safety and Suitability for Service of Munitions, Explosives and Related Products
AOP-39	Guidance on the Development, Assessment and Testing of Insensitive Munitions.
STANAG 4123	Determination of the Classification of Military Ammunition and Explosives – AASTP-3
STANAG 4439	Policy for Introduction, Assessment and Testing for Insensitive Munitions
United Nations document (UN) ST/SG/AC.10/11/ Rev 3/R.256	Recommendation on the Transport of Dangerous Goods. Manual of Tests and Criteria

AIM

1. The aim of the agreement is:

   a. To provide a standard test procedure (Procedure 1) for assessing the reaction, if any, of munitions and weapon systems to a gradually increasing thermal environment at 3.3°C per hour;

   b. To provide an alternative, tailorable, test procedure (Procedure 2) for assessing the reaction, if any, of munitions and weapon systems to a gradually increasing thermal environment as determined by means of a Threat Hazard Assessment (THA).

AGREEMENT

2. Participating nations agree that Procedure 1, as incorporated in this STANAG, will be applied on a mandatory test for hazard classification (HC) purposes and may also be used as a standard test for determining the reaction, if any, of munitions and weapon systems to a gradually increasing thermal environment. Procedure 2 may also be used when a tailored heating rate is justified. National orders, manuals and instructions implementing this STANAG will include a reference to the STANAG number for purpose of identification. No departure may be made from the agreement without consultation with the tasking authority. Nations may propose changes at any time to the tasking authority where they will be processed in the same manner as the original agreement.

DEFINITIONS

3. See AOP-38 for the definitions of terms used in this document.

GENERAL

4. Effort to minimise the reaction of munitions to fire, and to maximise the time to this reaction, is a continuing commitment of weapons designers in order that the safety of personnel and materiel will not be jeopardised.

5. The objective of the selected Slow Heating Test is the assessment of the reaction and time to reaction, if any, of a munition(s) when subjected to a slow heating environment.

DETAILS OF THE AGREEMENT

6. Application. This STANAG provides guidance and procedures for slow heating tests. The procedures should be conducted by participating nations as a part of the Insensitive Munition (IM) evaluation of munitions where required by STANAG 4439. The procedures may also be used for Hazard Classification (HC) (STANAG 4123), and other applications not covered by STANAG 4439, but where the response of a munition to slow heating is required to be assessed. When intended to satisfy both IM and HC requirements, the test plans should be coordinated with appropriate authorities in these two areas.

TEST FACILITIES

7. Limitations. These procedures do not represent any particular high temperature situation. Should it be desired to represent a particular in-service or accident situation, procedure 2 may be modified to reflect the actual requirements, for example, vehicle, fuel, heating rate, and test configuration.

8. Special Notes. In slow heating tests, a substantial part of the explosive material may reach hazardous temperatures before ignition occurs. Therefore, subsequent events are likely to be more violent than those that occur in fast heating tests.

9. Standard Test Item. For the tests, the item tested must be to the full production standard, although non-explosive sections of the item need only be geometrically and thermally representative. For all-up rounds that contain more than one major energetic component (such as rocket motors and warheads), the energetic components may be tested either individually or as an all-up round. The item may be either packaged or unpackaged, as agreed by the appropriate national authorities.

10. Simulants. The use of simulants, dummy units or structures may result in a change in the heat flow patterns expected for the actual service item. Simulants may have different thermal properties than normal service items. Accordingly, any simulants used must have demonstrated comparable behavior to that of the real Service-built, standard items that they represent. Similarly, complex electronic units should be thermally simulated only if it can be demonstrated independently that there is no possibility of the heating environment causing the unit to produce a spurious signal capable of initiating a firing circuit.

11. Test Requirements. There are two procedures for performing the Slow Heating Test. Regardless of which procedure is followed, a minimum of two tests will be performed, with one test item per test, unless otherwise determined by national authorities. If the item is tested in its shipping container and, therefore, is not visible to a video camera, it is strongly recommended that a supplementary test be performed without the shipping container.

a. Procedure 1 (Standard Test). Using the facility, test set-up, and instrumentation specified herein and in the Test Plan, subject the test item to gradually increasing temperatures, at a rate of 3.3°C/hour, until a reaction occurs, and record its reaction as a function of time and temperature. Prior to starting, adjust the chamber temperature at a rate of approximately 5°C/minute and precondition the test item at 50°C for 8 hours or until the test item reaches thermal equilibrium at 50°C, whichever occurs first.

b. Procedure 2 (Tailored Test). Preconditioning is not required with this procedure. Real scenarios for slow heating can lead to many heating rates. If an analysis suggests that a particular heating rate is appropriate for the test item, that heating rate may be used in this test, and that analysis should be provided with the data. If no analysis has been done, a rate of 25°C per hour should be used as a default rate. This rate is believed to be near the lower limit of situations that are likely to occur as a result of indirect exposure to fire. However, if developers want the test to be applicable for HC purposes, the heating rate must be reduced to 3.3 °C per hour in accordance with UN Hazard Classification procedures.

12. Test Facility. The test is usually performed by placing the test item in a disposable oven and heating the item with circulating heated air. The test facility shall be capable of increasing the air temperature at the prescribed rate throughout the anticipated temperature range and maintaining a reasonably uniform temperature in the air around the test item. Some gradient in temperature between the input and exit air streams is to be expected, but this should not be greater than 5°C. As an aid to achieving uniform temperatures, there should be an air space at least 200 mm wide on all sides of the item to allow for air circulation, and the oven should be insulated. A minimum of four thermocouples should be used to be sure that the oven is uniformly heated and to monitor the surface temperature of the test item. Where it is possible to get access to the interior of the test item without altering the test item, interior temperatures should also be measured. In general, there should be at least two thermocouples mounted on opposite surfaces of the test item, one each in the air space near the air inlet and exit, and one each in the air space on opposite sides of the round (see Figure 1). The oven should be constructed so as to provide the least possible confinement for any reactions that occur, and it should have a window to permit video coverage.

13. Instrumentation (prior to reaction). Temperature as a function of time should be recorded at multiple positions as described in the preceding paragraph. The thermocouple sampling rate should be at least once per minute. If the munition is not in a shipping container, video coverage of the munition prior to reaction should be obtained. This can reveal changes in the physical structure of the munition (movement of shaped charge liners, for instance) prior to reaction, and sometimes reveals exudation of the energetic material, or other factors which may be important in interpreting the test results. Still photographs of the test setup should also be obtained.

14. Instrumentation to assess reaction type. Depending on the size and type of munition, various techniques can be used to assess the violence of the reaction and to assign a reaction type (see AOP-39). The best instrumentation for this purpose must be chosen by the test engineers based on their experience and judgement, but the following techniques should be considered for IM (see STANAG 4439) or HC (see STANAG 4123) assessments:

a. Airblast Overpressure. Measurement of airblast pressures is strongly recommended. Ideally, the gauges should be calibrated by detonating the test munition in its test configuration in an oven so that the maximum output from a Type I reaction is known. The presence of the oven will affect the blast pressure, so the oven should be as light as possible. Several "pencil-type" gauges mounted off-the-ground, at different distances from the test item, are recommended. The best results are usually obtained when the distance from the event to the line of gauges is such that the expected blast overpressure ranges from 3.5 to 70 kPa.

b. Witness Plates. Witness plates are often useful. Use witness plates strong enough to withstand a detonation of the test item. However, the optimum material to use for a witness plate depends on the type and velocity of the expected fragments. For heavy munitions with steel walls, a steel witness plate with a thickness of at least 25mm is recommended. However, for munitions with aluminum skins or very thin steel skins, an aluminum witness plate may work better. For munitions with plastic or composite skins, witness plates may not be useful. Normally, witness plates should not be in direct contact with the round since this might alter the heat flow into the round and the confinement of the energetic material. Ideally, there should be 200 mm between the witness plate and the test munition so as not to interfere with the uniform heating of the munition. Witness plates may affect the air blast from a munition, so it is best if there is no witness plate in the direction of the blast instrumentation.

c. Fragment Recovery. Recovered fragments can be useful in assessing the type of reaction. In some cases, it may be useful to put up fragment recovery panels (soft fiber board or plaster panels which stop fragments without breaking them). If used, these might replace one of the witness plates, but they should be outside of the oven. A map showing the location and type of recovered fragments may also be useful, but it must be recognized that the presence of the oven may affect the distance that fragments are thrown.

d. Photography. Still photographs of debris are useful for assessing reaction type.

e. Video. In addition to the close up video of the munition prior to reaction, a second video from a greater distance is useful. The field of view should be such that the ejection of debris and the fireball, if one forms, can be seen.

15. Constraints. Range safety may require that some items be constrained so that propulsive reactions don't carry them off the range. If so, the constraints should be designed to have a minimal effect on heat transfer to the munition or on the confinement of the munition. If used, constraints may interfere with the assessment of propulsive reactions. The assessment of propulsive reactions when constraints are used is a difficult problem which test engineers must consider on a case-by-case basis.

16. Observations and records. As a minimum, the following observations are to be made and reported in the test report:

a. Test identification (model, serial number, etc.);

b. Type of energetic material and weight;

c. Photographs of the test setup;

d. Listing of environmental preconditioning tests performed;

e. Thermocouple identification and locations;

f. Thermocouple data for all sensors;

g. A record of events versus time and temperature through the end of the trial;

h. The nature of any reactions by the test item, including indication of propulsion;

i. Blast pressure records;

j. Photographs of after test residue and debris;

k. Photographs of witness plates (if used);

l. Debris map;

m. Number and depth of penetrations in fragment recovery panels (if used);

n. Video and sound track.

17. Data obtained from this test must not be factored with respect to either temperature or time in order to derive forecasts of performance in other situations, which may involve lower temperature or heat flux levels. Rates of heat flow and thermal gradients within complex assemblies can become non-linear when changes of state and/or the loss of integrity of internal structures and components occur.

18. Evaluation of test results. Guidance is given in:

a. UN document ST/SG/AC.10/11/ Rev 3/R.256. Recommendation on the Transport of Dangerous Goods.Manual of Tests and Criteria (UN tests 7f and 7h);

b. STANAG 4439, Policy for Introduction, Assessment and Testing for Insensitive Munitions.

c. AOP-39, Guidance on the Development, Assessment and Testing of Insensitive Munitions.

IMPLEMENTATION OF THE AGREEMENT

19. This STANAG is considered to be implemented by a nation when that nation has issued the necessary orders/instructions:

a. that all future munitions and weapon systems will be assessed/tested in accordance with this agreement;

b. to provide its NATO forces with the details in this agreement with reference to this STANAG.

20. Data developed in accordance with this STANAG shall be made available to other NATO Nations participating in a collaborative weapon development or procurement program, upon receipt of a request submitted through appropriate National channels.

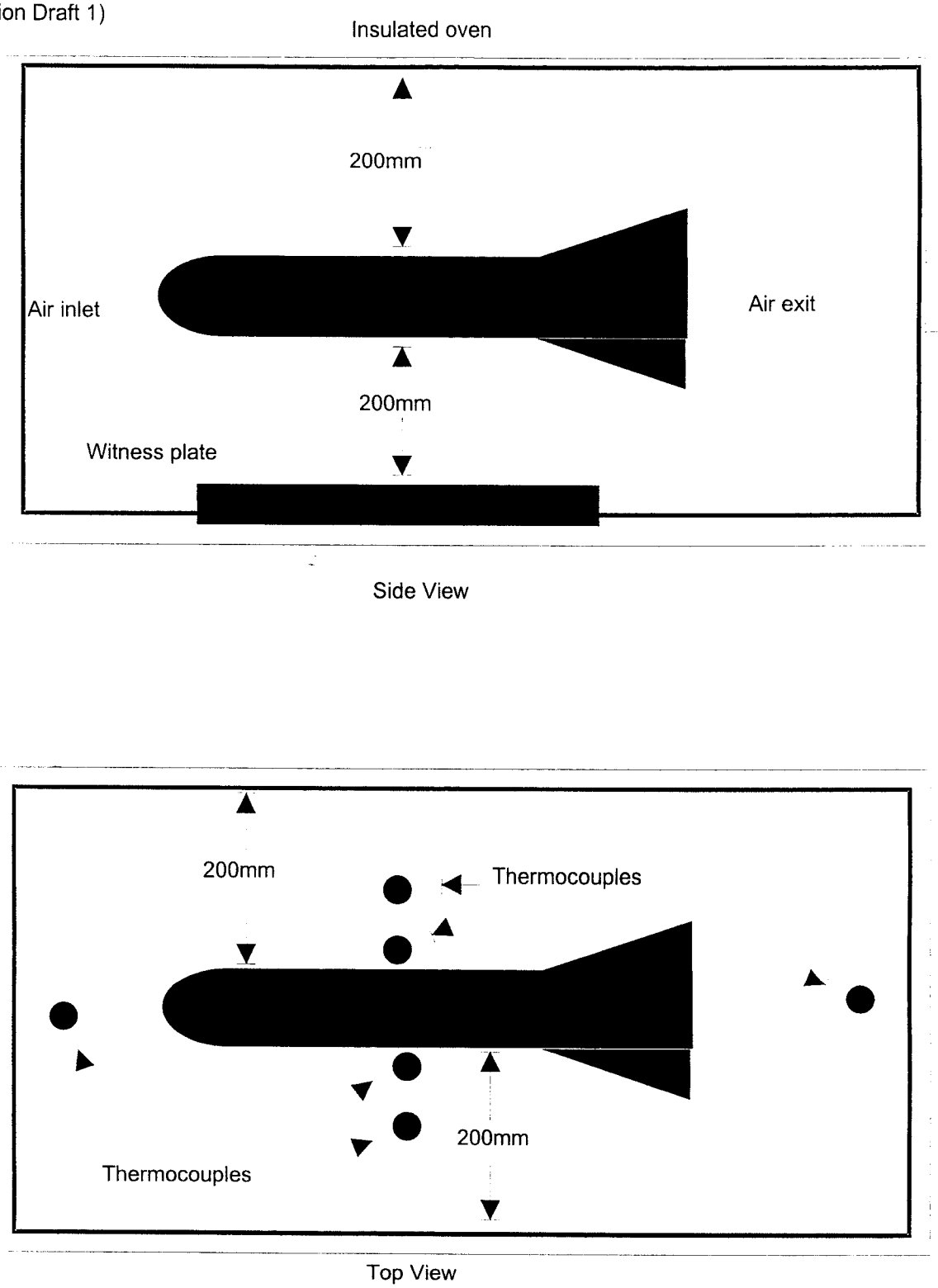

Figure 1. - Schematic drawing of a slow heating test setup.

ANNEX to
AC/310-D/197

STANAG 4382
(Edition 2)
(Ratification Draft 1)

NATIONAL REPLY ON THE RATIFICATION AND IMPLEMENTATION OF A STANAG

(National Reference and Date)

To : Assistant Secretary General for Defence Support
NATO/OTAN

Subject : STANAG 4382 (Edition 2) - RATIFICATION DRAFT 1 – SLOW HEATING, MUNITIONS TEST PROCEDURES

Reference : AC/310-D/197 dated 12 December 2001

1. (*nation*) ratifies/does not ratify(*) the agreement received under cover reference.

2. Ratification and implementation details are as follows:

RATIFICATION REFERENCE AND DATE	**IMPLEMENTATION**					
	Forecast Date			Actual Date		
	NAVY	ARMY	AIR	NAVY	ARMY	AIR

3. NATIONAL IMPLEMENTING DOCUMENT(s):

4. RESERVATIONS:

5. OTHER INFORMATION:

.....
(Signature block)

(*) Delete as appropriate

OFFICE OF THE UNDER SECRETARY OF DEFENSE

3000 DEFENSE PENTAGON
WASHINGTON DC 20301-3000

ACQUISITION AND TECHNOLOGY

June 10, 2002

MEMORANDUM FOR U.S. MISSION TO NATO, ARMAMENTS COOPERATION DIVISION (ARMY ARMAMENTS OFFICER), PSC 81, APO AE 09724

SUBJECT: Draft STANAG 4396 (EDITION 2) – "SYMPATHETIC REACTION, MUNITION TEST PROCEDURE "

Reference document, AC/310-D/196, 12 December 2001, SAB.

The U.S. Armed Forces ratifies the referenced agreement.

Ratification and implementation details are as follows:

	IMPLEMENTATION					
	Forecast Date			Actual Date		
RATIFICATION REFERENCE	NAVY	ARMY	AIR FORCE	NAVY	ARMY	AIR FORCE
Memo, OUSD(A&T) DATED AS ABOVE		June 10, 2002			June 10, 2002	

NATIONAL IMPLEMENTING DOCUMENT: MIL-STD-2105C

RESERVATIONS: None

COMMENTS: See attached DA Form 4797-R.

The point of contact is Mr. James E. Elliott, DSN 880-3047, commercial (973) 724-3047.

Anthony J. Melita
U.S. Key Delegate
AC/310 Main Group

CF:

Mr. Don Porada, Naval Ordnance Safety & Security Activity, Code N6, 23 Strauss Avenue, Bldg D-323, Indian Head, MD 20640-5555

Mr. James Lewis, Air Armament Center, AAC/SES, 1001 North 2nd Street, Suite 366, Eglin AFB, FL 32542-6838

Mr. James Elliott, U.S. Army Armament Research, Development & Engineering Center (ARDEC), AMSTA-AR-QAW-S, Picatinny Arsenal, NJ 07806-5000

Dr. Ruth Doherty, Naval Surface Warfare Center, Indian Head Division, Code 920T, 101 Strauss Ave, Indian Head, MD 20640-5035

Mr. Chris Janow, U.S. Army Armament Research, Development & Engineering Center (ARDEC), AMSTA-AR-CCZ, Picatinny Arsenal, NJ 07806-5000

Mr. Stephen N. Tanner, Naval Air Warfare Center, Code 476400D, China Lake, CA 93555-6001

Mr. Sami Hoxha, U.S. Army Armament Research, Development & Engineering Center (ARDEC), AMSTA-AR-QAW-S, Picatinny Arsenal, NJ 07806-5000

Mr. Homesh Lalbahadur, U.S. Army Armament Research, Development & Engineering Center (ARDEC), AMSTA-AR-CCF-D, Picatinny Arsenal, NJ 07806-5000

Mr. Herbert Egbert, U.S. Army Developmental Test Command, CSTE-DTC-TT-M, 314 Longs Corner Road, Aberdeen Proving Ground, MD 21005-5055

Mr. Brent Knoblett, DOD Explosives Safety Board, Room 856C, Hoffman Bldg I, 2461 Eisenhower Ave, Alexandria, VA 22331-0600

Dr. Jerry Ward, DOD Explosives Safety Board, Room 856C, Hoffman Bldg I, 2461 Eisenhower Ave, Alexandria, VA 22331-0600

Doctrine Division (C426), Marine Corps Combat Development Center, 3300 Russell Road, Suit 318A, Quantico, VA 22134-5021

HQUSAF/SAF/IAQ, 1500 Wilson Blvd, 9th Floor, Arlington, VA. 22209

Mr. R. Sladden, Armaments CO-Operation Section, Defence Support Division, NATO Headquarters, Avenue Leopold III, 1110 Brussels, Belgium

Comments to STANAG 4396E2

NO (a)	NATION (b)	PAGE (c)	PARA (d)	LINE (e)	COMMENT(S) (f)	REASON(S) (g)
1	U.S.	5	10.a.	2	**COMMENT:** Change the reference to the UN Test from ''6_c and 7_g'' to ''6_b and 7_k''	Accuracy. The current references are incorrect.
2	U.S.	5	12	1	**COMMENT:** Add the following to the start of the sentence, ''Except where noted, as a ..''.	Two of the observations listed are not mandatory for all tests.
3	U.S.	6	12.g.	1	**COMMENT:** Change to read, ''Blast pressure records (strongly recommended for unconfined tests only)''	Data records are not of any use if the test articles are confined during the test.
4	U.S.	6	12.j.	1	**COMMENT:** Change to read, ''Fragment Map (not required or practical for confined test);	Fragment data is not meaningful if the test articles are confined.

NORTH ATLANTIC COUNCIL
CONSEIL DE L'ATLANTIQUE NORD

NATO/PfP UNCLASSIFIED

12 December 2001

DOCUMENT
AC/310-D/196

GROUP ON SAFETY AND SUITABILITY FOR SERVICE (S3) OF MUNITIONS AND EXPLOSIVES (AC/310)

CNAD PARTNERSHIP GROUP (CPG)

RATIFICATION DRAFT 1 - STANAG 4396 (EDITION 2) - SYMPATHETIC REACTION, MUNITION TEST PROCEDURES

Memorandum by the Assistant Secretary General for Defence Support

(RATIFICATION REQUEST)

Reference: PfP(CPG-S/3-SG/3)DS/8 dated 30 November 2001

1. The Group on Safety and Suitability for Service of Munitions and Explosives, Sub-Group 3, approved, at reference, draft STANAG 4396 (Edition 2) for issue for ratification.

2. In line with the decision of the Group, the agreed text is herewith forwarded to delegations of NATO nations who are requested to obtain the national ratification by 15 June 2002. The delegations are asked to inform the Defence Support Division of their national Ratification references, together with a statement of the date by which national implementation is intended to be effective, using the ratification response form at Annex. The service or services within which the standard applies should be indicated.

3. Most national Ministries of Defence contain a standardization office or standardization liaison officer who can give advice on the procedure to be adopted to obtain a formal ratification reference. It is recommended that contact be made with that office.

4. As soon as sufficient ratifications have been received, this STANAG will be forwarded for promulgation.

(Signed) R. G. BELL

Enclosure: Stanag 4396 (Edition 2)
1 Annex

Action Officer: R. Sladden
Original: English

Enclosure to
AC/310-D/196

STANAG 4396
(Edition 2)
(Ratification Draft 1)

NORTH ATLANTIC TREATY ORGANIZATION
(NATO)

NATO STANDARDIZATION AGENCY
(NSA)

STANDARDIZATION AGREEMENT
(STANAG)

SUBJECT: SYMPATHETIC REACTION, MUNITION TEST PROCEDURES

Promulgated on 2001

Jan H ERIKSEN
Rear Admiral, NONA
Director, NSA

Enclosure to
AC/310-D/196

STANAG 4396
(Edition 2)
(Ratification Draft 1)

RECORD OF AMENDMENTS

No.	Reference/date of amendment	Date entered	Signature

EXPLANATORY NOTES

AGREEMENT

1. This NATO Standardization Agreement (STANAG) is promulgated by the Director, NSA under the authority vested in him by the NATO Military Committee.

2. No departure may be made from the agreement without consultation with the tasking authority. Nations may propose changes at any time to the tasking authority where they will be processed in the same manner as the original agreement.

3. Ratifying nations have agreed that national orders, manuals and instructions implementing this STANAG will include a reference to the STANAG number for purposes of identification.

DEFINITIONS

4. Ratification is "In NATO Standardization, the fulfilment by which a member nation formally accepts, with or without reservation, the content of a Standardization Agreement" (AAP-6).

5. Implementation is "In NATO Standardization, the fulfilment by a member nation of its obligations as specified in a Standardization Agreement" (AAP-6).

6. Reservation is "In NATO Standardization, the stated qualification by a member nation that describes the part of a Standardization Agreement that it will not implement or will implement only with limitations" (AAP-6).

RATIFICATION, IMPLEMENTATION AND RESERVATIONS

7. Page (iii) gives the details of ratification and implementation of this agreement. If no details are shown it signifies that the nation has not yet notified the tasking authority of its intentions. Page (iv) (and subsequent) gives details of reservations and proprietary rights that have been stated.

FEEDBACK

8. Any comments concerning this publication should be directed to NATO/NSA - Bvd Leopold III, 1110 Brussels - BE.

Enclosure to
AC/310-D/196

STANAG 4396
(Edition 2)
(Ratification Draft 1)

RATIFICATION AND IMPLEMENTATION DETAILS
STADE DE RATIFICATION ET DE MISE EN APPLICATION

NATION / PAYS	NATIONAL RATIFICATION REFERENCE REFERENCE DE LA RATIFICATION NATIONALE	NATIONAL IMPLEMENTING DOCUMENT DOCUMENT NATIONAL DE MISE EN APPLICATION	IMPLEMENTATION/MISE EN APPLICATION					
			INTENDED DATE OF IMPLEMENTATION DATE ENVISAGEE DE MISE EN APPLICATION			DATE IMPLEMENTATION WAS ACHIEVED DATE EFFECTIVE DE MISE EN APPLICATION		
			NAVY MER	ARMY TERRE	AIR	NAVY MER	ARMY TERRE	AIR
BE								
CA								
CZ								
DA								
FR								
GE								
GR								
HU								
IT								
LU								
NL								
NO								
PL								
PO								
SP								
TU								
UK								
US								

Enclosure to
AC/310-D/196

STANAG 4396
(Edition 2)
(Ratification Draft 1)

RESERVATIONS/RESERVES

Enclosure to
AC/310-D/196

STANAG 4396
(Edition 2)
(Ratification Draft 1)

NAVY/ARMY/AIR

NATO STANDARDIZATION AGREEMENT (STANAG)

SYMPATHETIC REACTION, MUNITION TEST PROCEDURES

Annexes: None.

Related documents:

AECTP-200	Environmental Testing – Definitions of environments.
AOP-38	AC/310 Glossary of Terms and Definitions Concerning the Safety and Suitability for Service of Munitions, Explosives and Related Products
AOP-39	Guidance on the Development, Assessment and Testing of Insensitive Munitions
STANAG 2895	Extreme Climatic Conditions and Derived Conditions for Use in Defining Design/Test Criteria for NATO Forces Materiel
STANAG 4123	Determination of the Classification of Military Ammunition and Explosives – AASTP-3
STANAG 4439	Policy for Introduction, Assessment and Testing for Insensitive Munitions.
United Nations document (UN) ST/SG/AC.10/11/ Rev 3/R.256	Recommendation on the Transport of Dangerous Goods Manual of Tests and Criteria.

AIM

1. To provide a standard test procedure to assess the potential for a munition to sympathetically react to the initiation of an adjacent munition.

AGREEMENT

2. Participating nations agree that the procedure incorporated in this STANAG will be used for determining the reaction, if any, of munitions to the reaction of a same type of munition in close proximity, and that national orders, manuals and instructions implementing this STANAG will include a reference to the STANAG number for purpose of identification. No departure may be made from the agreement without consultation with the tasking authority. Nations may propose changes at any time to the tasking authority, where they will be processed in the same manner as the original agreement.

LIMITATIONS

3. This document does not include the procedures for assessing the effects of the reactions of different types of munitions stored or placed in close proximity in regular logistic storage. If required, a suitable procedure could be developed from that given here.

DEFINITIONS

4. For the purpose of this document, the definitions of terms to be used to describe test events are provided in AOP-38 and STANAG 4439.

GENERAL

5. This test is one of those referenced in STANAG 4439 for Insensitive Munitions (IM) assessment. It may also be used for Hazard Classification (HC) as required by STANAG 4123 and United Nations (UN) document ST/SG/AC.10/11/ Rev 3/R.256, and other applications not covered by these STANAGs. When intended to satisfy both IM and Hazard Classification (HC) requirements, the test plans should be coordinated with appropriate authorities in these two areas.

6. Munitions are often positioned in adjacent locations, either in a magazine, on a launching ramp, or during the operational weapon system deployment. In such conditions, a reacting munition (donor) may transmit blast, shock, flame, fragments, or other debris, to other munitions (acceptor) stored in the vicinity. If these other munitions or packages of munitions can be initiated by any of these effects, the consequences of the event could be catastrophic, resulting in potential loss of life and equipment.

DETAILS OF THE AGREEMENT

7. Purpose. The purpose of this test to:

   a. subject one or more acceptor munitions to the effects of the worst case credible reaction of an identical donor munition, in the in-service situation assessed to be the most likely to result in sympathetic reaction. (For Hazard Classification (HC), this is generally the storage and transportation situation.)

   b. determine the sympathetic reaction sensitivity of munitions.

   c. provide an indication of the effectiveness of safety barriers or other devices used to separate either single, packaged, or multiple packages of munitions.

8. Sample Selection

   a. The test items should be in their storage/transport configuration, but in the smallest configuration (smallest individual package) offered. The test requires sufficient packages or articles to give a minimum total volume of 0.15 m^3, with a minimum of one donor and two acceptor packages. The munition(s) shall be separated from its neighbours by a distance determined from logistics requirements.

   b. Donor and Acceptor Munitions. The test items (donor and acceptors) must be to the full production standard, although non-explosive sections of the items need only be geometrically and thermally representative. For all-up rounds that contain more than one major energetic component (such as rocket motors and warheads), the energetic components may be tested either individually or as an all-up round. Where both donor and acceptor munitions contain subsystems and assemblies that may be assessed as not enhancing the explosive reaction, consideration may be given to their replacement by less costly material, providing that output, fragmentation, and debris production are similar for the donor munition, and that acceptor munitions do not become less susceptible to the effects produced by the donor munition. For Hazard Classification (HC) purposes, test the configuration to be hazard classified.

c. Inert Acceptor Munitions. Where stacks of munitions, unpackaged or packaged, are to be used, explosively inert munitions other than donor and acceptor munitions, may also be used to obtain a reasonable simulation of confinement. The structure, mass and shape of these inert munitions should be similar to those of donor and acceptor munitions. The inert items used for confinement cannot be used to meet the 0.15 m^3 volume requirement of paragraph 8.a.

9. Choice of Test Parameters

a. Initiation Considerations.

(1) If designed to detonate, detonate the donor in the design mode.

(2) For rocket motors and gun propellants, initiate the donor with a credible threat (for example, Shaped Charge Jet (SCJ)) that produces the worst case donor reaction.

(3) For all others, use the normal means of initiation.

Note: The test is generally not required for IM if the item will not detonate.

b. Number and Layout of Munitions.

(1) In the case of a storage stack, the donor munition should be surrounded by the acceptor munitions, with similar but inert munitions providing the outer containment. The volume of the stack must be at least 0.15 m^3 minimum. If the volume of the donor and one acceptor package exceeds 0.15 m^3, two acceptors are required, but three are desirable. Where three acceptors are used, the arrangement should be such that two of them will be attacked diagonally in the most direct way (see Figure 1). Within a package, it is generally not acceptable to replace live items with inert items. Any plan to do so must be approved by appropriate authorities.

(2) Where protection devices are used (e.g., shields, screens, etc.) with the objective of reducing the likelihood of sympathetic reaction, they shall be included in the test configuration.

For (1) and (2) above, the configuration (confining and protection devices) could be determined by a Threat Hazard Assessment (THA).

(3) Two tests shall be performed - one with confinement and one without.

c. Preconditioning. Before subjecting munitions to test, preconditioning of munitions may be required where assessment shows that the preconditioning environment is likely to be a hot or cold temperature soak. The temperature values should be determined from the life cyle assessment and STANAG 2895 and AECTP-200.

d. Distance Between Munitions. The distance separating the donor and acceptor munitions shall equal the usual distance likely to be encountered in service, e.g., side by side for containers, actual distances for storage ramps, operational deployment distance for weapon systems.

1. These arrangements are examples representing munition storage only.

2. **Munition stacks**: Below is an example of a regular stacking of munitions lined up in the same direction. In this case, the donor is in the middle of the stack as shown below:

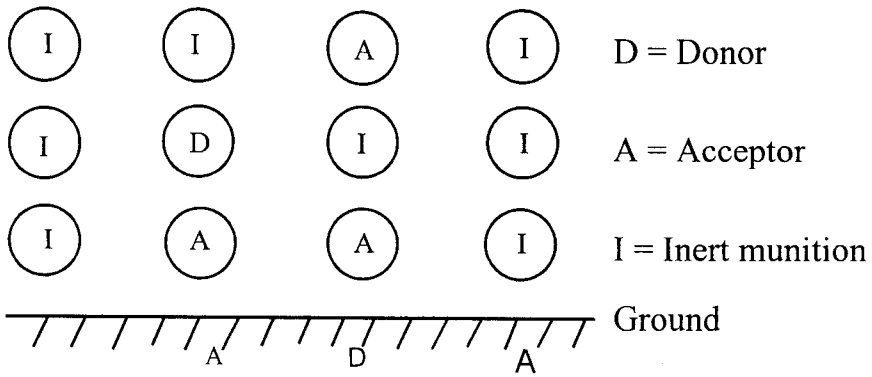

3. **Additional storage arrangements**: Storage ramps, feeding passages. The arrangement will include at least one and, if possible, 2 active receiving munitions, and at least one inert munition as follows:

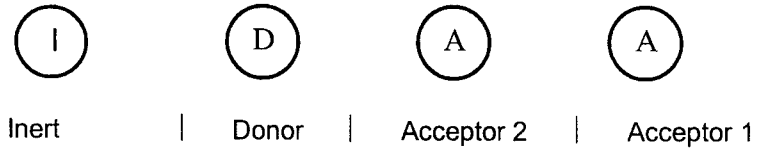

Figure 1. Examples of munition arrangements.

e. External Confinement. Any confinement should represent that of a typical storage confinement. Confinement may be simulated with sandbags or sand/earth-filled containers stacked around the test stack at least 1m thick in all directions. If an existing external confinement is likely to alter the test result, the confinement should be simulated in the test. Both partial and complete confinement are possible, e.g., walls in two dimensions or an enclosed magazine. The latter can be simulated by a test structure for which the ratio of the volume of active and inert munitions to the volume of the test cell approximates that existing in the actual operationnal or storage configuration. Variations of up to 20% are acceptable. It is not appropriate to use inert items in the test arrangement simulating the unconfined situation, because they contribute to confinement without the possibility of reacting.

f. Test Organization. The items subjected to the tests in compliance with this procedure may show violent reactions resulting in fragment and debris. If it is assessed that the acceptor munition might become propulsive, appropriate restraining measures should be taken. The possibility of protective devices altering the test results as well as the quality of the measurements should be checked. The device used to support the test item should be the same as that existing in the operational or storage configuration and must not change the results of the test.

10. Assessment Criteria: Guidance is given in:

a. UN document ST/SG/AC.10/11/Rev 3/R.256, Recommendations on the Transport of Dangerous Goods: Manual of Tests and Criteria (UN Tests 6_c and 7_g);

b. Stanag 4439, Policy for Introduction, Assessment and Testing of Insensitive Munitions;

c. AOP-39, Guidance on the Development, Assessment and Testing of Insensitive Munitions.

11. Instrumentation.

a. Cinematography: High speed cameras or video shall be used to record the reaction(s) of the acceptors. Care should be taken to prevent obscuration of the acceptor by the donor reaction products.

b. Video: Low speed recorders shall be used to cover any delayed reaction up to about 30 minutes after the donor has been fired.

c. Time markers: A timing device shall be used to provide correlation between recording processes.

d. Witness plates: Witness plates should be placed near test items to provide an indication of the acceptor reaction. The witness plates should be made of a material which is likely to record the impact of the fragments from a detonation. Steel or aluminium are usually used. Ideally the witness plate should be calibrated by exposing it to the detonation of a test munition.

e. Air blast presssure: Pressure gauges may be used to measure the air shock. The transducers should be placed in arrays some distance from the test configuration; they may be in ground or in elevated mounts. The fixtures shall not interfere with the air flow. Precalibration shall be considered if external sensors are used.

f. Fragment evaluation: Methods to determine the size, density and kinetic energy of fragments may be used.

12. Observations and records. As a minimum, the following observations are to be made and reported in the test report:

a. Test identification (model, serial number, etc.);

b. Type of energetic material and weight;

c. Photographs of the test setup;

d. Listing of environmental preconditioning tests performed;

e. A record of events versus time through the end of the trial;

f. The nature of any reactions by the test item, including indication of propulsion;

g. Blast pressure records (strongly recommended);

h. Photographs of after test residue and debris;

i. Photographs of witness plates;

j. Fragment map;

k. Number and depth of penetrations in fragment recovery panels (if used);

l. High speed video and sound track.

IMPLEMENTATION OF THE AGREEMENT:

13. This STANAG is considered to be implemented by a nation when that nation has issued the necessary orders/instructions:

a. that all future munitions and weapon systems will be assessed/tested in accordance with this agreement,

b. to provide its NATO forces with the details in this agreement with reference to this STANAG.

14. Data developed in accordance with this STANAG shall be made available to other NATO Nations participating in a collaborative weapon development or procurement program upon receipt of a request submitted through appropriate National channels.

ANNEX to
AC/310-D/196

STANAG 4396
(Edition 2)
(Ratification Draft 1)

NATIONAL REPLY ON THE RATIFICATION AND IMPLEMENTATION OF A STANAG

(National Reference and Date)

To : Assistant Secretary General for Defence Support
NATO/OTAN

Subject : STANAG 4396 (Edition 2) - RATIFICATION DRAFT 1 – SYMPATHETIC REACTION, MUNITION TEST PROCEDURES

Reference : AC/310-D/196 dated 12 December 2001

1. (*nation*) ratifies/does not ratify(*) the agreement received under cover reference.

2. Ratification and implementation details are as follows:

RATIFICATION REFERENCE AND DATE	IMPLEMENTATION					
	Forecast Date			Actual Date		
	NAVY	ARMY	AIR	NAVY	ARMY	AIR

3. NATIONAL IMPLEMENTING DOCUMENT(s):

4. RESERVATIONS:

5. OTHER INFORMATION:

.....
(Signature block)

(*) Delete as appropriate

26 January 2004

DOCUMENT
PFP(AC/326)D(2004)0005

CNAD AMMUNITION SAFETY GROUP (AC/326)
RATIFICATION DRAFT 1 - STANAG 4496 (EDITION 1)
FRAGMENT IMPACT, MUNITIONS TEST PROCEDURE

Memorandum by the Assistant Secretary General for Defence Investment
(RATIFICATION REQUEST)

Reference: PFP(AC/326-SG/3)DS(2003)001 dated 6 October 2003

1. The CNAD Ammunition Safety Group (AC/326) Sub-Group 3, approved, at reference, draft STANAG 4496 (Edition 1) for issue for ratification.

2. In line with the decision of the Group, the agreed text is herewith forwarded to delegations of NATO nations who are requested to obtain the national ratification by 30 April 2004. The delegations are asked to inform the Defence Investment Division (Secretary AC/326) of their national Ratification references, together with a statement of the date by which national implementation is intended to be effective, using the ratification response form at Annex 1. The service or services within which the standard applies should be indicated.

3. Most national Ministries of Defence contain a standardization office or standardization liaison officer who can give advice on the procedure to be adopted to obtain a formal ratification reference. It is recommended that contact be made with that office.

4. As soon as sufficient ratifications have been received, this STANAG will be forwarded for promulgation.

(Signed) Marshall BILLINGSLEA

1 Annex
1 Enclosure

Action Officer: M-C. Mortier, Ext. 3942
Original: English
G:\APPP\Committee Support\AC326\AC 326 SG 3\STANAGsAOPs\PFP(AC_326)D(2004)0005.E.STANAG4496Ed1.doc

ANNEX 1
PFP(AC/326)D(2004)0005

NATIONAL REPLY ON THE RATIFICATION AND IMPLEMENTATION OF A STANAG

(National Reference and Date)

To: Assistant Secretary General for Defence Investment
NATO/OTAN

Subject: STANAG 4496 (Edition 1) - RATIFICATION DRAFT 1 – FRAGMENT IMPACT, MUNITIONS TEST PROCEDURE

Reference: PFP(AC/326)D(2004)0005 dated 26 January 2004

1. (*nation*) ratifies/does not ratify(*) the agreement received under cover reference.

2. Ratification and implementation details are as follows:

RATIFICATION REFERENCE AND DATE	IMPLEMENTATION					
	Forecast Date			Actual Date		
	NAVY	ARMY	AIR	NAVY	ARMY	AIR

3. NATIONAL IMPLEMENTING DOCUMENT(s):

4. RESERVATIONS:

5. OTHER INFORMATION:

.....
(Signature block)

(*) Delete as appropriate

Enclosure 1
PFP(AC/326)D(2004)0005

STANAG 4496
(Edition 1)
(Ratification Draft 1)

NORTH ATLANTIC TREATY ORGANIZATION
(NATO)

MILITARY AGENCY FOR STANDARDIZATION
(NSA)

STANDARDIZATION AGREEMENT
(STANAG)

SUBJECT: **FRAGMENT IMPACT, MUNITIONS TEST PROCEDURE**

Promulgated on

J. MAJ
Brigadier General, PLAR
Director, NSA

STANAG 4496
(Edition 1
(Ratification Draft 1)

RECORD OF AMENDMENTS

No.	Reference/date of Amendment	Date Entered	Signature

EXPLANATORY NOTES

AGREEMENT

1. This NATO Standardization Agreement (STANAG) is promulgated by the Director NATO Standardization Agency under the authority vested in him by the NATO Standardization Organisation Charter.

2. No departure may be made from the agreement without informing the tasking authority in the form of a reservation. Nations may propose changes at any time to the tasking authority where they will be processed in the same manner as the original agreement.

3. Ratifying nations have agreed that national orders, manuals and instructions implementing this STANAG will include a reference to the STANAG number for purposes of identification.

RATIFICATION, IMPLEMENTATION AND RESERVATIONS

4. Ratification, implementation and reservation details are available on request or through the NSA websites (internet http://nsa.nato.int; NATO Secure WAN http://nsa.hq.nato.int).

FEEDBACK

5. Any comments concerning this publication should be directed to NATO/NSA – Bvd Leopold III - 1110 Brussels - BE.

STANAG 4496
(Edition 1
(Ratification Draft 1)

NAVY/ARMY/AIR

NATO STANDARDIZATION AGREEMENT
(STANAG)

FRAGMENT IMPACT, MUNITIONS TEST PROCEDURE

Annex: A - Standard Fragment.

Related Documents:

AOP 38	Glossary of Terms and Definitions Concerning the Safety and Suitability for Service of Munitions, Explosives, and Related Products
AOP 39	Insensitive Munitions (MURAT) Requirements and Assessment Testing and Evaluation
STANAG 4123	Determination of the Classification of Military Ammunitions and Explosives
STANAG 4439	Policy for Iintroduction, Assessment and Testing for Insensitive Munitions (MURAT)
MIL-STD-2105B	Hazard Assessment Tests for Non-Nuclear Munitions
NAVSEA INST 8010 5 B	Insensitive Munitions Program Planning and Execution
STANAG 2895	Extreme Climatic Conditions and Derived Conditions for Use in Defining Design/Test Criteria for NATO Forces Materiel

AIM

1. The aim of this agreement is:

   a. to provide a standard test procedure for assessing the reaction, if any, of a munition to the high-velocity impact of a calibrated fragment representative of a bomb or artillery fragment.

   b. to provide an alternative, tailorable, test procedure for assessing the reaction, if any, of a munition to the impact of a calibrated fragment representative of a bomb or artillery fragment at a lower velocity.

AGREEMENT

2. This document can be applied as part of an IM program with respect to STANAG 4439, or used independently. Participating nations agree that the procedure incorporated in this STANAG will be used for assessing the reaction, if any, of munitions to fragment impact**,** and that national orders, manuals and instructions implementing this STANAG will include a reference to the STANAG number for purpose of identification. No departure may be made from the agreement without consultation with the tasking authority. Nations may propose changes at any time to the tasking authority where they will be processed in the same manner as the original agreement.

DEFINITIONS

3. For the purpose of this document, the definitions of terms to be used to describe test events are provided in AOP-38 and STANAG 4439.

GENERAL

4. During its life cycle (storage, handling, transportation, operational deployment), a munition may encounter different types of unplanned stimuli (hazards) that can cause an energetic response. Fragment impact is one of these stimuli. The results of this test provide service reviewers some of the necessary information to assess the effects of a munitions response to hazards on war fighting capability, potential loss of life, and damage to property.

DETAILS OF THE AGREEMENT

5. Application. This STANAG provides guidance and procedures for fragment impact tests. They should be conducted by participating nations as a part of the Insensitive Munitions (IM) evaluation of munitions where required by STANAG 4439. They may also be used for other applications not covered by these STANAGs, but where the response of a munition to fragment impact is required to be known. The intent of the test is to expose a munition to the effects of fragment impact, to determine the reaction of this munition, and to provide an indication of the effectiveness of safety barriers or other devices used to limit the severity of the fragment impact.

6. Tested Sample Selection. The test item should be in its all-up round configuration (unless otherwise identified by the THA). The explosive items tested must be to the full production standard, although, in the case of complete munitions undergoing test, the non-explosive section of the item need only be geometrically and thermally

representative. For all-up rounds that contain more than one major energetic component (such as rocket motors and warheads), the energetic components may be tested either individually, or as an all-up round. The item may be either unpackaged or packaged in logistic or tactical containers, as agreed by the appropriate national authorities. Development standard items may be used if the explosive part is identical to the full production standard item, and the changes can be shown to not affect the test result. Development standard items may also be used to effect preliminary assessments of response.

7. Item temperature. The temperature of the item should be the local ambient environmental temperature for the test site or the storage temperature most consistent with the life-cycle analysis and THA. If the THA and/or technical analysis indicates a credible threat at a temperature that can yield a more severe reaction, additional test(s) may be required at that temperature.

8. Fragment description. A drawing of the fragment is shown in annex A. It has a right-circular cylindrical body with a conical nose.

9. Test Configuration. Two test procedures are included in this document: a standard procedure and an alternate procedure.

   a. The standard fragment impact test will provide an indication of a munitions response to a high-velocity impact representative of a bomb or artillery fragment, as well as a reliable, repeatable data set for comparing different munitions and mitigation technologies. The impact velocity of the standard test will be 2530 ± 90 m/s (8300 ± 300 ft/s).

   b. The alternate procedure will provide an alternate test with a lower stimulus level since the standard test does not represent a credible threat within the scope of all munitions' life cycles. The impact velocity of the alternate procedure will be 1830 ± 60 m/s (6000 ± 200 ft/s). This alternate test can be used for scenarios where the THA dictates that impact by 2530 m/s fragments is of extremely low probability (<0.0001) during the life-cycle of the munition.

   c. The selection between the standard procedure and the alternate procedure should be made through a THA that has been reviewed by the appropriate service review board. Other velocities may be chosen if it is proved that they may lead to a more severe result.

10. Layout of the munition. The test item will be placed on a test stand such that the behavior of the munition is not altered and the stand does not compromise interpretation of the response.

11. Firing device. To reduce the variability due to yaw, a gun system is recommended. The firing device will be chosen so as not to compromise interpretation of the response.

12. Preliminary Shot. A preliminary shot may be useful to validate the threat (mainly the velocity). It could also be used to determine the blast impulse produced by the shot itself, in order to help the analysis of overpressure measured during the test. The blast impulse may be recorded so it can be used to correct the test records.

13. Safety. Stores tested in accordance with the requirements of this procedure may react with violence from type V to type I or become propulsive (see AOP 39). Consequently, it is the responsability of the agency conducting the test to ensure the safety of personnel and equipment during preparation of the test, and during and after the performance of the test.

14. Point of impact. The point of impact of the fragment will be chosen in order to generate the worst reaction: one test is conducted with impact in the center of the largest presented area of energetic material or component and a second in the most shock sensitive region. However, if the impact on the most sensitive area is of sufficient low probability, as defined by the THA and approved by the review board, the second test will not be mandatory. In addition, impact locations of low probability that may lead to irreproducible reactions should in general be avoided (e.g., weld seams or joints).

15. Orientation of impact. The orientation of impact will generally be normal to the surface of the munition.

16. Number of tests: two tests maximum are required (see § 14). Additional tests may be required if deemed necessary by the appropriate service review board.

17. Observations and records. Data will be recorded to provide validation of the fragment velocity, impact location, and response descriptor.
    a. The following minimum observations are to be made and records kept:

        (1) Test item identification (model, serial numbers, number of test items, etc.);
        (2) Impact velocity;
        (3) Details of gun and fragment (weight, dimensions, material) used;
        (4) Record of aim point(s) selected;
        (5) Blast pressure. If gauges are used, they shall have sufficient frequency response to adequately follow the pressure history of the maximum possible response. The gauges shall be calibrated to record the peak pressure expected from the maximum possible response of the test item;
        (6) Witness plates;

(7) A record of events against time, from the order to fire to the end of the trial;
(8) Wind speed and direction before the test;
(9) The nature of any reactions by the test item;
(10) The nature (size) and distribution of residue and debris (fragmap and recovery techniques);
(11) Listing of environmental preconditioning test performed;
(12) Type of energetic material and weight;
(13) The orientation of the test item's longitudinal axis, and layout of the firing area;
(14) Audio-record (in combination with high-speed video recording);
(15) Indication of propulsion (video or other suitable means).

b. The following photographic records and videos are to be made:

(1) Still photographs of the test item before and after each trial;
(2) Still photographs of any other residues arising as a result of the trial;
(3) Colour cine-film or video for the duration of each trial.

18. Degree of Confidence in the Results. Computer modeling and probabilistic approach may be used to increase confidence in the results, or to suggest other velocities that may lead to a more severe result.

IMPLEMENTATION OF THE AGREEMENT

19. This STANAG is considered to be implemented by a nation when that nation has issued the necessary orders / instructions:

a. that all future munitions and weapon systems will be assessed / tested in accordance with this agreement;

b. to provide its NATO forces with the details in this agreement with reference to this STANAG.

20. Data developed in accordance with this STANAG shall be made available to other NATO Nations participating in a collaborative weapon development or procurement program, upon receipt of a request submitted through appropriate National channels.

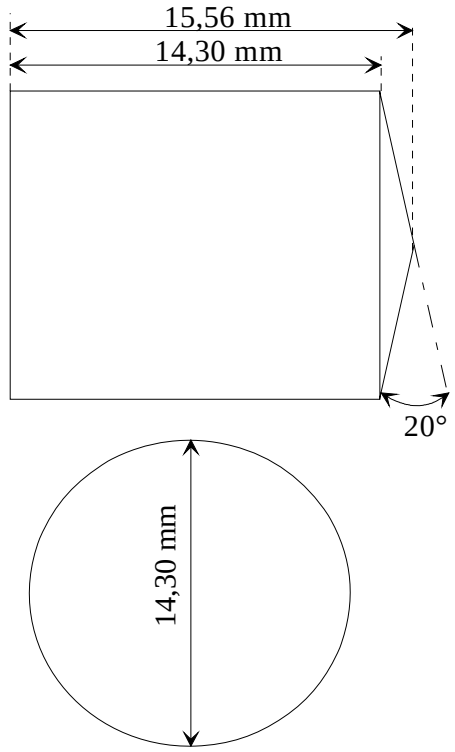

Notes:

Shape ⇨ a conical ended cylinder with the ratio $\frac{\text{L (length)}}{\text{D (diameter)}} > 1$ for stability;

Tolerances : ± 0,05 mm and ± 0°30'
Fragment Mass: 18,6 g
Fragment material: Fragment Material: A mild, carbon steel with a Brinell Hardness (HB) less than 270.

Annex A: Standard Fragment

The United States has ratified this STANAG and it is approved for use. Actual promulgation by NATO is expected within one year. At that time, this document will be replaced by the promulgated version. Any U.S. comments or reservations are included in the following letter.

OFFICE OF THE UNDER SECRETARY OF DEFENSE
3000 DEFENSE PENTAGON
WASHINGTON, DC 20301-3000

ACQUISITION, TECHNOLOGY AND LOGISTICS

October 31, 2002

MEMORANDUM FOR U.S. MISSION TO NATO, ARMAMENTS COOPERATION DIVISION (ARMY ARMAMENTS OFFICER), PSC 81, APO AE 09724

SUBJECT: Draft STANAG 4526 (EDITION 1) – "SHAPED CHARGE JET, MUNITION TEST PROCEDURES"

Reference document, AC/310-D/198, 7 Mar 2002, SAB.

The U.S. Armed Forces ratifies the referenced agreement.

Ratification and implementation details are as follows:

	IMPLEMENTATION					
	Forecast Date			Actual Date		
RATIFICATION REFERENCE	NAVY	ARMY	AIR FORCE	NAVY	ARMY	AIR FORCE
Memo, OUSD(A&T) DATED AS ABOVE		October 31, 2002			October 31, 2002	

NATIONAL IMPLEMENTING DOCUMENT: None, STANAG is self-implementing.

RESERVATIONS: None

COMMENTS: None

The point of contact is Mr. James E. Elliott, DSN 880-3047, commercial (973) 724-3047.

Anthony J. Melita
U.S. Key Delegate
AC/310 Main Group

SUBJECT: Draft STANAG 4526 (EDITION 1) – "SHAPED CHARGE JET, MUNITION TEST PROCEDURES "

CF:

Mr. Danny Brunson, Naval Ordnance Safety & Security Activity, Code N09, 23 Strauss Avenue, Bldg D-323, Indian Head, MD 20640-5555

Mr. James Lewis, Air Armament Center, AAC/SES, 1001 North 2nd Street, Suite 366, Eglin AFB, FL 32542-6838

Mr. James Elliott, U.S. Army Armament Research, Development & Engineering Center (ARDEC), AMSTA-AR-QAW-S, Picatinny Arsenal, NJ 07806-5000

Dr. Ruth Doherty, Naval Surface Warfare Center, Indian Head Division, Code 920T, 101 Strauss Ave, Indian Head, MD 20640-5035

Mr. Chris Janow, U.S. Army Armament Research, Development & Engineering Center (ARDEC), AMSTA-AR-CCZ, Picatinny Arsenal, NJ 07806-5000

Mr. Stephen N. Tanner, Naval Air Warfare Center, Code 476400D, China Lake, CA 93555-6001

Mr. Sami Hoxha, U.S. Army Armament Research, Development & Engineering Center (ARDEC), AMSTA-AR-QAW-S, Picatinny Arsenal, NJ 07806-5000

Mr. Homesh Lalbahadur, U.S. Army Armament Research, Development & Engineering Center (ARDEC), AMSTA-AR-CCF-D, Picatinny Arsenal, NJ 07806-5000

Mr. Brent Knoblett, DOD Explosives Safety Board, Room 856C, Hoffman Bldg I, 2461 Eisenhower Ave, Alexandria, VA 22331-0600

Dr. Jerry Ward, DOD Explosives Safety Board, Room 856C, Hoffman Bldg I, 2461 Eisenhower Ave, Alexandria, VA 22331-0600

Doctrine Division (C426), Marine Corps Combat Development Center, 3300 Russell Road, Suit 318A, Quantico, VA 22134-5021

HQUSAF/SAF/IAQ, 1500 Wilson Blvd, 9th Floor, Arlington, VA. 22209

Mr. R. Sladden, Armaments CO-Operation Section, Defence Support Division, NATO Headquarters, Avenue Leopold III, 1110 Brussels, Belgium

7 March 2002

DOCUMENT
AC/310-D/198

**GROUP ON SAFETY AND SUITABILITY FOR SERVICE (S3)
OF MUNITIONS AND EXPLOSIVES (AC/310)**

CNAD PARTNERSHIP GROUP (CPG)

**RATIFICATION DRAFT 1 - STANAG 4526 (EDITION 1)
SHAPED CHARGE JET, MUNITIONS TEST PROCEDURE**

Memorandum by the Assistant Secretary General for Defence Support

(RATIFICATION REQUEST)

Reference: PfP(CPG-S/3-SG/3)DS/8 dated 30 November 2001

1. The Group on Safety and Suitability for Service of Munitions and Explosives, Sub-Group 3, approved, at reference, draft STANAG 4526 (Edition 1) for issue for ratification.

2. In line with the decision of the Group, the agreed text is herewith forwarded to delegations of NATO nations who are requested to obtain the national ratification by 1 October 2002. The delegations are asked to inform the Defence Support Division of their national Ratification references, together with a statement of the date by which national implementation is intended to be effective, using the ratification response form at Annex. The service or services within which the standard applies should be indicated.

3. Most national Ministries of Defence contain a standardization office or standardization liaison officer who can give advice on the procedure to be adopted to obtain a formal ratification reference. It is recommended that contact be made with that office.

4. As soon as sufficient ratifications have been received, this STANAG will be forwarded for promulgation.

(Signed) R. G. BELL

Enclosure: Stanag 4526 (Edition 1)
1 Annex

Action Officer: R. Sladden
Original: English
H:\AC310\AC310 STANAGs=AOPs\Stanags-AOPs Rati Rqt\198E4526 Ed1-ENG-NU.doc

ANNEX to
AC/310-D/198

STANAG 4526
(Edition 1)
(Ratification Draft 1)

NATIONAL REPLY ON THE RATIFICATION AND IMPLEMENTATION OF A STANAG

(National Reference and Date)

To : Assistant Secretary General for Defence Support
NATO/OTAN

Subject : STANAG 4526 (Edition 1) - RATIFICATION DRAFT 1 – SHAPED CHARGE JET, MUNITIONS TEST PROCEDURE

Reference : AC/310-D/198 dated 7 March 2002

1. (*nation*) ratifies/does not ratify(*) the agreement received under cover reference.

2. Ratification and implementation details are as follows:

RATIFICATION REFERENCE AND DATE	IMPLEMENTATION					
	Forecast Date			Actual Date		
	NAVY	ARMY	AIR	NAVY	ARMY	AIR

3. NATIONAL IMPLEMENTING DOCUMENT(s):

4. RESERVATIONS:

5. OTHER INFORMATION:

.....
(Signature block)

(*) Delete as appropriate

Enclosure to
AC/310-D/198

STANAG 4526
(Edition 1)
(Ratification Draft 1)

NORTH ATLANTIC TREATY ORGANIZATION
(NATO)

NATO STANDARDIZATION AGENCY
(NSA)

STANDARDIZATION AGREEMENT
(STANAG)

SUBJECT: SHAPED CHARGE JET, MUNITIONS TEST PROCEDURE

Promulgated on 2002

Jan H ERIKSEN
Rear Admiral, NONA
Director, NSA

Enclosure to
AC/310-D/198

STANAG 4526
(Edition 1)
(Ratification Draft 1)

RECORD OF AMENDMENTS

No.	Reference/date of amendment	Date entered	Signature

EXPLANATORY NOTES

AGREEMENT

1. This NATO Standardization Agreement (STANAG) is promulgated by the Director, NSA under the authority vested in him by the NATO Military Committee.

2. No departure may be made from the agreement without consultation with the tasking authority. Nations may propose changes at any time to the tasking authority where they will be processed in the same manner as the original agreement.

3. Ratifying nations have agreed that national orders, manuals and instructions implementing this STANAG will include a reference to the STANAG number for purposes of identification.

DEFINITIONS

4. Ratification is "In NATO Standardization, the fulfilment by which a member nation formally accepts, with or without reservation, the content of a Standardization Agreement" (AAP-6).

5. Implementation is "In NATO Standardization, the fulfilment by a member nation of its obligations as specified in a Standardization Agreement" (AAP-6).

6. Reservation is "In NATO Standardization, the stated qualification by a member nation that describes the part of a Standardization Agreement that it will not implement or will implement only with limitations" (AAP-6).

RATIFICATION, IMPLEMENTATION AND RESERVATIONS

7. Page (iii) gives the details of ratification and implementation of this agreement. If no details are shown it signifies that the nation has not yet notified the tasking authority of its intentions. Page (iv) (and subsequent) gives details of reservations and proprietary rights that have been stated.

FEEDBACK

8. Any comments concerning this publication should be directed to NATO/NSA - Bvd Leopold III, 1110 Brussels - BE.

Enclosure to
AC/310-D/198

STANAG 4526
(Edition 1)
(Ratification Draft 1)

RATIFICATION AND IMPLEMENTATION DETAILS
STADE DE RATIFICATION ET DE MISE EN APPLICATION

NATION / PAYS	NATIONAL RATIFICATION REFERENCE REFERENCE DE LA RATIFICATION NATIONALE	NATIONAL IMPLEMENTING DOCUMENT DOCUMENT NATIONAL DE MISE EN APPLICATION	IMPLEMENTATION/MISE EN APPLICATION					
			INTENDED DATE OF IMPLEMENTATION DATE ENVISAGEE DE MISE EN APPLICATION			DATE IMPLEMENTATION WAS ACHIEVED DATE EFFECTIVE DE MISE EN APPLICATION		
			NAVY MER	ARMY TERRE	AIR	NAVY MER	ARMY TERRE	AIR
BE								
CA								
CZ								
DA								
FR								
GE								
GR								
HU								
IT								
LU								
NL								
NO								
PL								
PO								
SP								
TU								
UK								
US								

Enclosure to
AC/310-D/198

STANAG 4526
(Edition 1)
(Ratification Draft 1)

NAVY/ARMY/AIR

NATO STANDARDIZATION AGREEMENT (STANAG)

SHAPED CHARGE JET, MUNITIONS TEST PROCEDURE

Related documents:

AOP-38	Glossary of Terms and Definitions Concerning the Safety and Suitability for Service of Munitions, Explosives and Related Products.
AOP-39	Guidance on the Development, Assessment and Testing of Insensitive Munitions (MURAT).
STANAG 4396	Sympathetic Reaction, Munition Test Procedures.
STANAG 4439	Policy for Introduction, Assessment and Testing for Insensitive Munitions.

AIM

1. The Aim of this agreement is:

   a. To provide a standard test procedure for determining the degree of reaction, if any, of a munition when hit by a typical top attack bomblet shaped charge jet;

   b. To provide an alternate, tailorable, test procedure for determining the degree of reaction of a munition when hit by a specific shaped charge jet determined by means of a Threat Hazard Assessment.

AGREEMENT

2. Participating nations agree that the procedures incorporated in this STANAG will be used for determining the reaction, if any, of munitions and weapon systems, when impacted by a shaped charge jet, and that national orders, manuals and instructions implementing this STANAG will include a reference to the STANAG number for purpose of identification. No departure may be made from the agreement without consultation with the tasking authority. Nations may propose changes at any time to the tasking authority where they will be processed in the same manner as the original agreement.

DEFINITIONS

3. For the purpose of this document, the definitions of terms used are provided in AOP-38, STANAG 4439, and AOP-39.

GENERAL

4. Minimizing the reaction of ordnance to shape charge jet impact is a continuing commitment of weapons designers in order that the safety of personnel and materiel will not be unduly jeopardised.

5. This test may not be appropriate for all types of munitions; limitations are given in paragraph 6. Other tests may be required to evaluate the response of munitions in tactical situations, such as when stowed on armored vehicles.

DETAILS OF THE AGREEMENT

6. **Application**. This STANAG provides guidance and procedures for the shape charge test. The test should be conducted by participating nations as a part of the safety evaluation of munitions where required by STANAG 4439, Policy for Introduction, Assessment and Testing for Insensitive Munitions (MURAT). It may also be used for Hazard Classification (HC) and other applications not covered by STANAG 4439, but where the response of a munition to shape charge jet impact is required to be known.

7. **Limitations**. The test is most appropriate for systems containing materials having a detonation failure diameter significantly larger than the jet diameter. Systems containing materials with small failure diameters, including most warheads, will normally fail this test. Consider this when determining whether or not to conduct the test. If other data indicate that the test item is very unlikely to pass the test, do not waste resources by conducting a test whose result is known in advance. The test may also be unnecessary if it can be reliably shown that the detonation failure diameter of the energetic material is larger than the diameter of the munition (so that a detonation cannot be sustained in the munition), and if the threat hazard assessment (THA) indicates that reactions less severe than Type I or Type II (see AOP-38) are not a concern. In order to make this judgement, determine the detonation failure diameter with the energetic material confined as it would be in the real munition. Make such a judgement only for very large and expensive test items, and support such a determination by data on the energetic material that is validated by knowledgeable national authorities. Materiel that passes this test is not necessarily acceptable in a tactical situation. Other tests may be required.

8. **Combination with the Sympathetic Reaction Test (STANAG 4396).** For small and relatively inexpensive munitions, the THA may indicate that the response of one munition by itself is not important, but that the response of a full logistical or tactical package containing several munitions may be important. STANAG 4396 requires that the donor munitions be initiated by the threat most likely to cause detonation. Normally, this will be a shaped charge jet chosen on the basis of the Threat Hazard Assessment, and combining these two tests will be possible. However, if there is another threat that is more likely to cause detonation of the donor, consider a separate Sympathetic Reaction Test.

9. **Standard Test Item**. In the standard test, the item tested must be to the full production standard, although non-explosive sections of the item need only be geometrically and inertially representative. For all-up rounds that contain more than one major energetic component (such as rocket motors and warheads), the energetic components may be tested either individually or as an all-up round. The item may be either packaged or unpackaged as agreed by the appropriate national authorities. If desired, use standard development test items (as opposed to production test items) to allow preliminary assessments. If the test has been combined with the Sympathetic Reaction Test, the test item will normally be one or more logistical packages, but the test may also be performed on an array that represents storage in a tactical vehicle.

10. **Test Configuration**. Figure 1 provides a schematic of a typical test configuration.

11. **Test Requirements**. There are two procedures for performing the Shaped Charge Jet Test. For each procedure, subject the test item, in either its logistical or tactical configuration, or both, as stated in the approved test plan, to a jet from a shaped charge. Include any applicable shielding.

a. Procedure 1 (Standard Test): Using the general guidance, test set-up, and instrumentation specified herein, and in the approved test plan, subject the test item to the jet from a shape charge representing the 50mm Rockeye, or equivalent based on similar V^2d values.

b. Procedure 2 (Tailored Test): Using the general guidance, test set-up, and instrumentation specified herein, and in the approved test plan, subject the test item to the jet from a shape charge based in part on the THA and, in part, on the types of shaped charges that each nation has available for testing.

12. **General Guidance**: In order to facilitate a beneficial exchange of information between nations, some standardization is desirable. In many cases, it has been observed that the effectiveness of a shaped charge in initiating explosive materials is proportional to the square of the jet velocity times the jet diameter (V^2d). Therefore, use a shaped charge jet that produces at least the V^2d value appropriate to the threat, as shown in Table 1, and that gives reproducible performance at the standoff used for this test. The density of the shaped charge jet material also influences the initiation process, so for this test use a copper jet. Ensure the appropriate value of V^2d is achieved on the outside of the munition or its shielding, if shielding is present. To achieve the desired V^2d, it may be necessary to adjust the jet velocity from an available shaped charge by placing an armor plate (conditioning armor) between the shaped charge and the test munition. The conditioning armor is used to adjust the V^2d delivered by the shaped charge. Do not confuse this with shielding, which is part of the munition's normal configuration as determined by the threat hazard assessment. Determine the effect of conditioning armor on jet velocity from equations that are well known to people versed in shaped charge jet technology. If conditioning armor is used, it will produce debris that, in rare instances, may influence the response of the munition. Consequently, if conditioning armor is used, ensure that there is a space of at least two shaped charge cone diameters between the conditioning armor and the test munition to minimize the effect of this debris. However, if the shielding stops the debris, this requirement can be eliminated; and in any case, the thickness of the shielding can be taken as part of this space requirement.

Table 1: Standardized V^2d values for a copper jet.

Threat	Representative V^2D ($mm^3/\mu s^2$)
Top Attack Bomblet	200
50mm Rockeye	360
Rocket Propelled Grenade	430
Anti-Tank Guided Missile	800

13. **Characterization of the Shaped Charge Jet**.

a. Note that two shaped charges which deliver the same V^2d on the outside of a munition or its shielding may deliver VERY different values of V^2d when the jet reaches the energetic material. Consequently, and so all nations may fully understand the test that is conducted, provide a full characterization of the jet if a jet other than the standard 50mm Rockeye is used. Characterization of the jet requires that the following be specified:

- velocity of the leading particle;
- diameter of the leading particle;
- average diameter of the jet particles after particulation;
- breakup time (time from detonation to jet particulation);
- standoff from shaped charge to munition;
- position of the virtual origin of the shaped charge jet within the cone;
- thickness of conditioning armor if any is used;
- penetration capability.

b. It is presumed that nations will have available characterized shaped charge jets that they can use for this test. Characterization of a shaped charge jet requires separate tests that are not described here.

14. **Initiation.** Initiate the shaped charge in a manner that ensures proper formation of the shaped charge jet.

15. **Shotline**. Use judgement in selecting a shotline. Base the shotline on the THA, and in general, select it to produce the greatest possibility of a Type I or Type II reaction while remaining consistent with the THA. In this regard, the following considerations may apply. If the energetic material contains a cavity of significant size, such as the center of a rocket motor, normally aim the jet to pass through this cavity (it has been observed that such cavities can promote the occurrence of Type I reactions). Subject to this constraint, the violence of the reaction, and the chance of getting a Type I response, will normally be maximized by choosing a shot line which gives the longest possible path length in the energetic material. However, generally avoid unlikely shotlines that are aimed at components that are very small compared to the bulk of the explosive or propellant. Therefore, normally do not aim at the igniter.

16. **Shaped Charge Standoff**. Place the shaped charge at a realistic standoff from the munition or its shielding, as determined by the THA. However, note that the standoff influences the V^2d delivered by a shaped charge, so the standoff must be specified as part of the jet characterization. For the sake of reproducibility and comparability of test results, it is best if the standoff is chosen so that the jet does not particulate before reaching the energetic material, but this may not be possible if the shielding is thick.

17. **Instrumentation**. The primary objective of this test is to determine if a Type I or a Type II reaction occurs. The instrumentation used should allow the characterization of any munition reaction in accordance with the reaction descriptors in AOP-38. In the following sub-paragraphs are examples of instrumentation that has proven to be successful in past tests, but the choice of what to use must be made by the test agency with detailed knowledge of the test item.

a. Airblast overpressure. For large munitions, use measurement of the airblast overpressure to provide evidence of the test item reaction. For smaller items, the blast from the shaped charge will obscure the blast from the test item. Install and operate the gauges using experienced personnel. Ideally, calibrate the gauges by deliberately detonating the test munition in its test configuration so that the maximum output from a Type I reaction is known. "Pencil-type" gauges, mounted off-the-ground, are recommended. Recommend using several gauges, mounted at different distances from the test item. The best results are usually obtained when the distance from the event to the gauge is such that the blast overpressure is in the range of 7 to 70 kPa.

b. Ballistic Pendulum. In some circumstances (especially when considering gun propellants in a cartridge case), a ballistic pendulum has proven to be a useful tool for assessing the air blast from jet induced reactions in munitions. Calibrate the pendulum with the detonation of a bare explosive charge and correct for the blast impulse produced by the attacking shaped charge (do not let the jet strike the pendulum).

c. Witness plates. Witness plates are often useful. Use witness plates strong enough to withstand a detonation of the test item. However, the optimum material to use for a witness plate depends on the type and velocity of the expected fragments. For heavy munitions with steel walls, recommend a steel witness plate with a thickness of at least 25 mm. However, for munitions with aluminum skins or very thin steel skins, an aluminum witness plate may work better. For munitions with plastic or composite skins, witness plates may not be useful. Likewise, if shielding is present, witness plates may not be useful, but in some cases, the shielding may function as a witness plate. In some cases, it may be more appropriate to use inert munitions, located where neighboring munitions would be placed in a real logistical or tactical configuration, in the place of witness plates. If witness plates are used, place them adjacent to two sides of the test item and calibrate them by detonating one of the test munitions in the presence of the witness plates. Ensure witness plates are not in contact with the test item since this could alter the response of the test item. Witness plates may affect the air blast from a munition, so it is best if there is no witness plate in the direction of the blast instrumentation.

d. Photography. High-speed motion picture photography may be useful in evaluating the reaction of large items. Recommend test personnel, based on their experience and the circumstances, choose the speed of the photography. Photograph the test setup before and after the test.

e. Wave Velocity Measurements. For very large munitions, it may be useful to measure the propagation rate of the reaction wave in the munition. This can be done with contact shorting pins, piezoelectric pins, or other measurement devices placed just off the surface of the munition at intervals from the point of impact (normally, they would be placed 2 or 3 mm from the surface of the test munition). Normally, it is not advisable to mount such instrumentation internally since this requires alteration of the test item.

f. Response of Adjacent Munitions. If the target consists of multiple munitions, as when this test has been combined with the Sympathetic Reaction Test (STANAG 4396), use the response of the neighboring munitions as a measure of the test result.

g. Fragment Recovery. Recovered fragments can be useful in assessing the type of reaction. In some cases, it may be useful to put up fragment recovery panels (soft fiber board or plaster panels which stop fragments without breaking them). If used, these might replace one of the witness plates. In other cases, when a Type I or Type II reaction does not occur, a map showing the location and type of recovered fragments may be useful.

18. **Documentation**. Develop a data sheet documenting the test results and provide it with the final report.

19. **Observations and records**. As a minimum, the following observations are to be made and reported in the test report :

a. Test item identification (model, serial number, etc.).

b. Type of energetic material and weight.

c. Listing of environmental preconditioning tests performed.

d. A full characterization of the shaped charge jet and conditioning armor, if used, as described in paragraph 13.

e. A record of events versus time through the end of the trial, including indication of propulsion.

f. The nature of any reactions by the test item.

g. Before and after test photos of the test setup and debris.

h. Photographs and description of the witness plates (if used), blast data (if obtained), high speed photography (if used), photographs of the fragments or debris recovered after the test, pin data showing reaction velocity (if obtained), and any other data used to assess reaction violence.

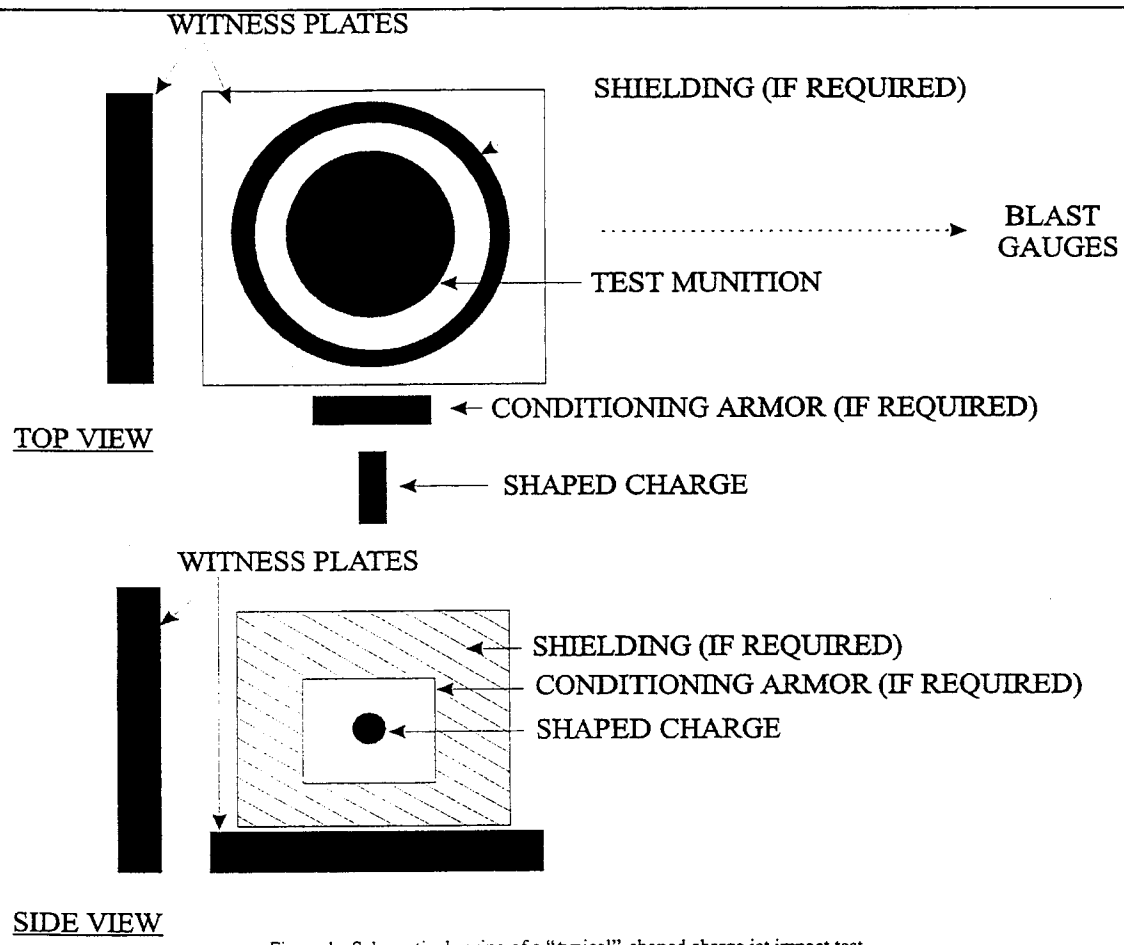

Figure 1. Schematic drawing of a "typical" shaped charge jet impact test.
(Details will vary depending on specific circumstances. The presence of shielding may obviate the usefulness of witness plates.)

IMPLEMENTATION OF THE AGREEMENT

20. This STANAG is considered to be implemented by a nation when that nation has issued the necessary orders/instructions to its forces regarding the use of this agreement for materiel being developed for use by NATO nations,

a. that all future munitions and weapon systems will be assessed/tested in accordance with this agreement,

b. to provide its NATO forces with the details in this agreement with reference to this STANAG.

21. Data developed in accordance with this STANAG shall be made available to other NATO Nations participating in a collaborative weapon development or procurement program, upon receipt of a request submitted through appropriate National channels.

OFFICE OF THE UNDER SECRETARY OF DEFENSE

3000 DEFENSE PENTAGON
WASHINGTON, DC 20301-3000

ACQUISITION,
TECHNOLOGY
AND LOGISTICS

MEMORANDUM FOR SERVICE STANDARDIZATION EXECUTIVES

SUBJECT: Allied Ordnance Publication (AOP) Number 7, Edition 2, Revision 1

The Department continues to make good progress in adopting internationally recognized commercial and NATO standards. In the area of munitions safety, NATO Standardization Agreements (STANAGs) and AOPs provide an excellent means for standardizing requirements and serve to further our goal of interoperability with our NATO allies. On occasion I will highlight areas where significant progress has been made towards this end, and where I want to emphasize your direct and immediate attention for specific implementation.

Over the last few years, the Services engaged in an effort to gain joint agreement on the requirements for qualification of explosive materials. This effort is of significance to the Department, because until now each Service maintained its own unique qualification requirements and procedures. The product of this joint effort is now documented in the U.S. section of AOP-7, Edition 2, Revision 1, "Manual of Data Requirements and Tests for the Qualification of Explosive Materials for Military Use," dated December 2004. AOP-7 replaces and cancels MIL-STD-1751A, "Safety and Performance Tests for the Qualification of Explosives (High Explosives, Propellants, and Pyrotechnics)," dated 11 December 2001. Copies of AOP-7 are available online at http://assist.daps.dla.mil/ or from the Standardization Document Order Desk, 700 Robbins Avenue, Building 4D, Philadelphia, PA 19111-5094.

All future acquisitions are hereby directed to implement and refer to AOP-7 for the qualification of explosive materials. Questions can be directed to Mr. Tony Melita, Deputy Director, Defense Systems, Land Warfare & Munitions, Office of the Under Secretary of Defense (Acquisition, Technology and Logistics), at 703-695-1382 or email Anthony.Melita@osd.mil.

Louis A. Kratz
Defense Standardization Executive

10.7.15 QUALIFICATION PROCEDURES FOR THE UNITED STATES

PARAGRAPH		PAGE
10.7.15.1	MILITARY DEPARTMENTS RESPONSIBLE FOR QUALIFICATION	US-2
10.7.15.2	NATIONAL AUTHORITIES	US-2
	a. DoD COORDINATING NATIONAL AUTHORITY	US-2
	b. ARMY QUALIFICATION AUTHORITY	US-3
	c. NAVY QUALIFICATION AUTHORITY	US-3
	d. AIR FORCE QUALIFICATION AUTHORITY	US-3
10.7.15.3	QUALIFICATION PROCEDURES	US-4
10.7.15.4	QUALIFICATION METHODS AND TESTS	US-5
10.7.15.4.1	HIGH EXPLOSIVES	US-5
	a. PRIMARY EXPLOSIVES	US-6
	b. BOOSTER HIGH EXPLOSIVES	US-7
	c. MAIN CHARGE HIGH EXPLOSIVES	US-10
	d. FUEL-AIR EXPLOSIVES	US-13
10.7.15.4.2	PROPELLANTS	US-13
	a. SOLID GUN PROPELLANTS	US-14
	b. SOLID ROCKET PROPELLANTS	US-16
	c. LIQUID PROPELLANTS	US-19
10.7.15.4.3	PYROTECHNICS	US-20
10.7.15.5	TESTS TO OBTAIN MANDATORY OR OPTIONAL DATA	US-22
10.7.15.6	LIST OF TEST INFORMATION SHEETS AND TEST DESCRIPTION	US-25
10.7.15.7	CATALOGUE OF TESTS INFORMATION SHEETS AND DESCRIPTIONS	US-26

10.7.15.0 PREAMBLE

In this Allied Ordnance Publication, AOP, the terms “energetic materials” and “explosive materials” are synonymous and are used interchangeably. High explosives, propellants, and pyrotechnics are the energetic materials addressed in this document.

10.7.15.1 MILITARY DEPARTMENTS RESPONSIBLE FOR QUALIFICATION

10.7.15.1.1 Each Service, the Army, the Navy (which includes the Marine Corps), and the Air Force, is responsible for selecting and qualifying explosive materials for its own application. This authority is delegated from the Secretary of Defense to, respectively, the Secretary of the Army, the Secretary of the Navy, and the Secretary of the Air Force. The Service Secretaries delegate these responsibilities to organizations in their command. There is no single National Qualification Authority identified for the United States. To comply with STANAG 4170, however, the Department of Defense (DoD) has identified a Coordinating National Authority to work with the NATO/PfP CNAD-sponsored organizations. He is the responsible agent, in the United States for all matters relating to the implementation of the latest editions of STANAG 4170 and its revisions; however this Coordinating National Authority does not Qualify explosive materials or issue qualification documents. Qualification is left to the Service Qualification Authorities.

10.7.15.1.2 To support the DoD Coordinating National Authority, each military Service has identified an authority responsible for the qualification of explosive materials for its own needs and to assist the Coordinating National Authority in the implementation of STANAG 4170. These Service Authorities or their delegated representatives are responsible for staffing all NATO/PfP correspondence and action items dealing with explosive materials qualification, safety, and suitability for service to the proper organizations within their respective Commands.

10.7.15.2 NATIONAL AUTHORITIES

10.7.15.2.1 The U.S. Department of Defense, DoD, Coordinating National Authority for Explosives is as follows:

Office of the Undersecretary of Defense (Acquisition, Technology, and Logistics/
Defense Systems, Land Warfare and Munitions) [OUSD(AT&L)/DS,LW&M]
Room 3B 1060
3090 Defense Pentagon
Washington, D C 20301-3090

a. The DoD Coordinating National Authority for Explosives performs the following functions:

(1) Coordinates the implementation of the latest editions of STANAG 4170 and its revisions.

(2) Coordinates the preparation, publication, and maintenance of the U.S. portion of this manual and of AOP-26 – “NATO Catalogue of Explosives”.

(3) Provides a DoD central point-of-contact to NATO and Partnership for Peace (PfP) Countries for information exchange on explosives technology and qualification of explosive materials.

(4) Provides a DoD point of contact to NATO/PfP countries for the exchange of information on safety and suitability for service of explosives and munitions.

Top

(5) Oversees and sponsors, in coordination with the three U.S. Services, all DoD activities related to the NATO AC/326 and its Six Subgroups.

10.7.15.2.2 The U.S. Military Qualification Authorities are as follows:

a. U.S. Army:

(1) For explosive materials developed by the U.S. Army Tank-Automotive and Armaments command:

Commander
U.S. Army Armament Research, Development and Engineering Center
ATTN: AMSRD-AAR-AEE
Picatinny Arsenal, NJ 07806-5000

(2) For explosive materials developed by the U.S. Army Aviation & Missile Command:

Commander
U.S. Army Aviation and Missile Command
ATTN: AMSRD-AMR-PS
Redstone Arsenal, AL 35898-5249

b. U.S. Navy and Marine Corps:

Commander
Naval Ordnance Safety and Security Activity
23 Strauss Avenue, Bldg. D-323
Indian Head, MD 20640-5035

c U.S. Air Force:

USAF Nonnuclear Munitions Safety Board
ATTN : Executive Secretary
Air Armament Center
AAC/SES
1001 N. 2nd Street, Suite 366
Eglin Air Force Base, FL 32542-6838

d Each U.S. Service Qualification Authority is responsible for the following:

(1) Defining the tests required to determine the safety and performance characteristics of the explosives used by that Service and the associated requirements for qualification.

(2) Receiving and assessing data for qualification generated by the various technical organizations involved in the development of explosive materials. Determining whether an explosive should be qualified based on test results indicating whether that material is safe and suitable for consideration in a particular role. Ensuring that all explosives incorporated in fielded weapon systems are qualified.

(3) Qualifying explosive materials by issuing appropriate documentation and promulgating this information into the various activities.

(4) Maintaining records of all explosives qualified including the data on which qualification was based and provide such information to the other Services for their consideration in qualification.

(5) Determining whether explosives qualified by the other Services are suitable for their own applications.

(6) Providing the DoD Coordinating National authority with information on energetic materials qualified by that Service, as necessary, to help answer queries from participating NATO countries.

10.7.15.3 QUALIFICATION PROCEDURES

10.7.15.3.1 The procedures used by the Qualification Authorities are mindful of the definitions for Qualification and Final (Type) Qualification provided in Chapter 4. That is, Qualification relates to the determination that a material is safe and suitable for use in its intended role (e.g. primary explosive, gun propellant, pyrotechnic, etc.) while Final (Type) Qualification refers to the safety and suitability of the energetic material for use in a specific munition or other end-item use. The following are the procedures used for Qualification:

a. Requests for qualification are submitted to the Service Qualification Authorities identified above. In general, a new explosive is subjected to the qualification procedure outlined in the latest edition of STANAG 4170 and this document. The U.S. has mandatory and advisory pass or fail criteria for most explosive materials. These are listed below for each type of explosive.

b. A Hazard or Interim Hazard Classification[1] may be required before qualification and is assigned in accordance with the "Department of Defense Explosives Hazard Classification Procedures". This document is identified by a different number by each Service and by the Defense Logistics Agency as follows:

Department of the Army	TB 700-2
Department of the Navy	NAVSEAINST 8020.8
Department of the Air Force	TO 11A-1-47
Defense Logistics Agency	DLAR 8220.1

The test requirements for hazard classification are not repeated in this document.

c. The qualification procedure followed by the Services provides the mandatory data for assessing an explosive's safety and performance characteristics related to a specific role or a potential military application. Certain tests are required if the data are deemed essential to the assessment process. The Service Qualification Authority may waive a test method if rationale is provided indicating that the mandatory data are not relevant or can be accurately derived by using an alternative procedure.

d. The Service Qualification Authorities reserve the option to waive or change mandatory data requirements and pass or fail criteria specified in STANAG 4170 and in this document. The Service waiving the requirement must document the reasons and the possible consequences of any waiver or change.

e. Since variations exist between facilities using similar equipment for obtaining qualification data, the data on new explosives are compared to that obtained with one or

[1] NATO STANAG 4123, "Methods to Determine and Classify Hazards of Ammunition", has been ratified by the United States, and is implemented by the above Tri-Service/DLA document.

two "Comparison Explosives" (as defined above in Chapter 4 of this AOP). The new explosive and the comparison explosive are evaluated under the same test conditions and with the same test apparatus. If two Comparison Explosives are required by the Service Qualification Authority, the candidate material is evaluated by comparing it, when possible, to reference explosives chosen such that they bracket the sensitivity of the new explosive.

f. Slight modifications to the composition of a qualified explosive could have a significant effect on the sensitivity of the material. As a result, any changes to the formulation of a qualified material, such as particle size adjustments or changes in the allowable tolerances are reviewed by the appropriate Service Qualification Authority who then determines if the new material must be requalified.

g. Qualification of an explosive material is necessary but not sufficient to obtain approval for limited production (ALP), approval for full production (AFP), or approval for Service Use (ASU) in a specific application.

h. Final (Type) Qualification as described above in Chapter 9 of this AOP is required before an explosive material is approved for military operational or training use in an application. This latter status is conferred by the Service Qualification Authority after the material has been tested in accordance with MIL-STD-2105C[2] or STANAG 4297 and its companion document AOP-15 and shown to be safe and suitable for use in the intended application. Insensitive Munitions evaluations are required and are made in accordance with STANAG 4439 and AOP-39. Each new application requires a reassessment and approval by the appropriate Service Qualification Authority. Requests for energetic material qualification of propellants and pyrotechnic materials are generally combined with requests for Final (Type) Qualification.

10.7.15.4 QUALIFICATION METHODS AND TESTS

10.7.15.4.1 High Explosives: These materials are qualified independently of specific end-items. The data requirements and tests listed below for each type of high explosive materials are required by the Service Qualification Authorities. Advisory or required pass or fail criteria are applied for most tests. Failure to meet any or all of the advisory criteria is normally a cause for rejection of the explosive. In general, the data requirements given in the latest editions of STANAG 4170 and in this section of AOP-7 are used. However, the Service Qualification Authority may require other tests when more data are required. Even though multiple tests are listed below for some stimuli, it is necessary to conduct only one test for each unless otherwise directed by the Service Qualification Authority. A description of tests used to obtain the data required by the National Authorities is provided in the Test Information Sheets provided in section 10.7.15.7.

10.7.15.4.1.1 The various roles identified for high explosives are not always consistent with the end-item use. For example, a booster explosive may be used as a main charge in a small munition or a primary explosive may be the main charge in a detonator. Thus, the role approved in Qualification must be based on the sensitivity measured in the qualification tests and an evaluation that is based on the results obtained with the Comparison Explosive as defined in Chapter 4.

Top

a. Requirements for Primary Explosives: These are materials used to initiate a detonation or a burning reaction. They are sensitive to thermal, mechanical and electrical stimuli and are not generally used beyond the safety and arming devices in

[2] MIL-STD-2105C, "Hazard Assessment Tests for Non-Nuclear Munitions" dated 14 July 2003 or latest revision.

munitions. Primary explosives are used in, for example, initial and intermediary charges in primers, igniters, detonators, caps, relays, electric matches, fuze heads, delays, explosive bolts, explosive switches, explosive valves, explosive cutters, and explosive pistons. Mandatory and optional data and test requirements are provided in table 1. Even though multiple tests are listed for some stimuli, it is necessary to conduct only one test for each unless otherwise directed by the Service Qualification Authority.

Table 1 - PRIMARY EXPLOSIVES	
MANDATORY/OPTIONAL DATA	TESTS/ REQUIREMENTS
IMPACT SENSITIVITY (MANDATORY)	Data are compared to normal lead Styphnate (MIL-L-757) or Dextrinated Lead Azide Type I (MIL-L-3055), measured contemporaneously with the candidate explosive. The Ball Drop Impact (U.S. 201.01.002 is preferred. Other tests may be used including: Bureau of Mines Impact (U.S. 201.01.003, ERL/Bruceton Impact Sensitivity (U.S. 201.01.001) or an appropriate NATO STANAG 4489 test.
FRICTION SENSITIVITY (MANDATORY)	Data are compared to normal lead Styphnate (MIL-L-757) or Dextrinated Lead Azide Type I (MIL-L-3055), measured contemporaneously with the candidate explosive. Normally one of the following tests is used: Pendulum Friction (U.S. 201.02.001), ABL Sliding Friction, (U.S. 201.02.005), BAM Friction apparatus (U.S. 201.02.006), Steel/Fiber Shoe Friction (U.S. 201.02.008), or an appropriate STANAG 4487 test.
ELECTROSTATIC SENSITIVITY (MANDATORY)	Data are compared to normal lead Styphnate (MIL-L-757) or Dextrinated Lead Azide Type I (MIL-L-3055), measured contemporaneously with the candidate explosive. Normally one of the following tests is used: Electrostatic Discharge (ESD), -ARDEC Method (U.S. 201.03.001), NAWC Method (U.S. 201.03.002), and NSWC Method (U.S. 201.03.003).
HOT-WIRE INITIABILITY	Data are compared to normal lead Styphnate (MIL-L-757) or Dextrinated Lead Azide Type I (MIL-L-3055), measured contemporaneously with the candidate explosive. Normally the Hot Wire Initiabilty test (U.S. 202.01.024) is used.
THERMAL STABILITY (MANDATORY)	There should be no more than 2 ml gas evolved per gram of explosive per 48 hours at 100 °C. Normally one of the following tests is used: VTS (U.S. 202.01.001), Modified VTS (202.01.022), and STANAG 4556 tests.
THERMAL CHARACTERIZATION (MANDATORY)	Determination of the minimum temperature for exotherm onset and the ignition temperature. Normally one of the following tests is used: DTA, (U.S 202.01.007), DSC, (U.S. 202.01.020), CRT (U.S. 204.01.001), STANAG 4515 tests, and TGA (U.S. 202.01.008) (if mass is being lost in the test).

Top

MANDATORY/OPTIONAL DATA	Table 1 - PRIMARY EXPLOSIVES TESTS/ REQUIREMENTS (Continued)
AGING PROPERTIES (MANDATORY)	An aging protocol shall be established (See Chapter 8 above). If the explosive is Qualified for joint military use, the aging protocol shall be approved by and coordinated among the Services.
COMPATIBILITY (MANDATORY)	The interaction of the explosive with common materials is assessed. The results for the explosive in a 1:1 mixture with the material being tested are compared with the results for the candidate explosive alone. The advisory criterion when using DTA or DSC is a change of no more than 10 °C in the exotherm peak temperature, measured at a heating rate of 10 °C/minute or less. See (U.S. 203-01-001) for details. TGA (U.S. 202.01.008) can be used if it appears that there is no heat change but a mass change may be occurring.
DENSITY	May be required for information purposes. Normally Pycnometry, (U.S. 102.01.071) or other scientifically acceptable tests can be used.
TOXICITY EVALUATION (MANDATORY)	Evaluation of the toxicity must be performed. This includes assessment of the ingredients, reaction products and by-products of the processing of the explosive. Support of the evaluation is available from the Operational Toxicology Branch, Air Force Research Laboratory Deployment and Sustainment Division, Wright Patterson AFB, Ohio.
MATERIAL SAFETY DATA SHEET (MSDS) (MANDATORY)	Shall be prepared in the early stages of the development of the explosive material.
HAZARD CLASSIFICATION/INTERIM HAZARD CLASSIFICATION	May be required. Tests are performed per the latest versions of TB 700-2, STANAG 4123, or UN Orange Book
RECORDING AND ISSUING DATA	Reports, Specifications, and Qualification certification shall be in accordance with Chapter 5 of this AOP
PRODUCIBILITY STATEMENT	May be required. An advisory statement on the producibility, processability, and safe-handling characteristics of the material provided to the Qualification Authority.

#Top

b. Requirements for Booster High Explosives: These materials are typically used in fuze components on the warhead side of the interrupter (shutter) of safety and arming devices. The pass-fail criteria in the table provided in section 7.5.3.1 complimented by those listed below are used to determine the suitability for service of booster explosives. Normally, failing to meet one or more of these criteria is cause for rejection. Even though multiple tests are listed for some stimuli, it is necessary to conduct only one test for each unless otherwise directed by the Service Qualification Authority. Table 2 lists the data required, tests performed, and mandatory and advisory acceptance criteria for booster explosives:

Table 2 - BOOSTER HIGH EXPLOSIVES	
MANDATORY/OPTIONAL DATA	TESTS/ REQUIREMENTS
IMPACT SENSITIVITY (MANDATORY)	Using the ERL/Bruceton Impact (U.S. 201.01.001) the criteria is no detonation at 12 cm for 10 out of 10 trials. For the BAM Impact (U.S. 201.01.005 or STANAG 4489) the criterion is no reaction at 3-joule level for 10 out of 10 trials. Using the Bureau of Mines Impact (U.S. 201.01.003), or using similar tests the test material shall be no more sensitive than a Type I or II, Class 5 RDX standard conforming to MIL-DTL-398 measured contemporaneously with the candidate explosive.
FRICTION SENSITIVITY (MANDATORY)	Using the BAM Friction apparatus per STANAG 4487 (U.S. 201.02.006) the acceptance criterion is no evidence of reaction at 80 N for 10 out of 10 trials. Using Rotary Friction (U.S. 201.02.004), Pendulum Friction (U.S. 201.02.001), ABL Sliding Friction, (U.S. 201.02.005), Steel/Fiber Shoe Friction (U.S. 201.02.008), the test material shall be no more sensitive than a Type I or II, Class 5 RDX standard conforming to MIL-DTL-398 measured contemporaneously with the candidate explosive.
EXPLOSION TEMPERATURE	Test per 5-Second Ignition Temperature (U.S. 202.01.016), or U.S. 202.01.023. Hazardous Component Safety Data Statement (HCSDS) requires this test.
ELECTROSTATIC SENSITIVITY (MANDATORY)	The candidate explosive should be less sensitive than Type I or II, Class 1 or Class 5 RDX conforming to MIL-DTL-398, measured contemporaneously with the candidate explosive. Normally one of the following tests is used: Electrostatic Discharge (ESD), (U.S. 201.03.001), (U.S. 201.03.002), (U.S. 201.03.003),
IGNITION SENSITIVITY (MANDATORY)	Using DTA (U.S. 202.01.007), DSC (U.S. 202.01.020), or STANAG 4491 tests, Exotherm Peak should be greater than 180ºC at 5 ºC/min.
HOT-WIRE IGNITION	This test determines whether the candidate explosive is sensitive to initiation when in contact with an electrically energized (hot) wire. The test used is U.S. 202.01.006.
VACUUM THERMAL STABILITY (MANDATORY)	No more than 2 ml gas evolved per gram of explosive per 48 hours at 100 °C. Tests used are: VTS (U.S. 202.01.001), Modified VTS (202.01.022), or STANAG 4556 tests. Using the Chemical Reactivity Test (US 204.01.001) the criterion is no more than 4 ml gas evolved per gram of explosive per 22 hours at 120°C.
SHOCK SENSITIVITY (MANDATORY)	Tests are normally performed in accordance with the NOL Small-Scale Gap Test (U.S. 201.04.003). Twenty samples are fired using 4.0-decibang attenuators. This corresponds to an input pressure of 12.1 kbar (1.21 GPa). The explosive passes if there are no detonations in 20 consecutive trials. Any reaction causing a dent of 0.002 inch or more in the target plate is considered a detonation, failing the test. Using the STANAG 4488 Small-Scale Gap Test the criterion is no evidence of detonation at 1 GPa at the density of application for 10 out of 10 trials. Using the STANAG 4488 Intermediate scale Gap test the criterion is no evidence of detonation at 1.4 GPa at the density of application for 10 out of 10 trials. If the confined critical diameter of the test explosive is greater than 0.2 inches, the NOL Large Scale Gap Test (U.S. 201.04.002) or similar test must be performed.

MANDATORY/OPTIONAL DATA	Table 2 - BOOSTER HIGH EXPLOSIVES TESTS/ REQUIREMENTS (Continued)
AGING PROPERTIES (MANDATORY)	An aging protocol shall be established (See Chapter 8 above) and, if the explosive is Qualified for joint military use, the aging protocol shall be approved and coordinated among the Services.
CRITICAL TEMPERATURE SELF-HEATING (MANDATORY)	The advisory criterion is a calculated critical temperature of no less than 180°F (82.2°C) for 500 days for a given geometry and mass. Self-heating is assessed either experimentally or by calculation. Normally one of the following tests is used to obtain the necessary data: DTA (U.S 202.01.007), DSC (U.S. 202.01.020), or STANAG 4515. The "One Liter Cook-Off Test" (U.S. 202.01.021) is used to determine the self-heating temperature and severity of reaction of melt-cast compounds or formulations in unconfined, spherical geometry.
COMPATIBILITY (MANDATORY)	The interaction of the candidate explosive with common materials (e.g., metals, adhesives, acids, bases) with which it may come into contact in production and use is assessed. The results for the candidate explosive in a 1:1 mixture with the material being tested for compatibility are compared with the results for the candidate explosive alone. Normally one of the following tests is used: DTA (U.S 202.01.007), DSC (U.S. 202.01.020), VTS (U.S. 202.01.001), Modified VTS (U.S. 202.01.022), or CRT (U.S. 204.01.001). TGA (U.S. 202.01.008) may be used if there is no heat change but a mass change may be occurring. The criterion when using DTA or DSC is a change of no more than 10°C in the exotherm peak temperature, measured at a heating rate of 10°C/minute or less. Using VTS (U.S. 202.01.001) or Modified VTS (U.S. 202.01.022) the criterion is no more than 2 ml gas evolved per gram of explosive per 48 hours at 100°C. Using CRT, gas volume produced is no more than 4 cm^3/g.
DENSITY/BULK DENSITY	May be required for information purposes. Normally Pycnometry, (US 102.01.071) or other scientifically acceptable tests can be used.
TOXICITY EVALUATION (MANDATORY)	Evaluation of the toxicity must be performed. This includes assessment of the ingredients, combustion products and by-products of the processing of the explosive. Support of the evaluation is available from the Operational Toxicology Branch, Air Force Research Laboratory Deployment and Sustainment Division, Wright Patterson AFB, Ohio.
COEFFICIENT OF THERMAL EXPANSION	Test per STANAG 4525 may be required for information purposes.
GLASS TRANSITION TEMPERATURE	Test per STANAG 4540 may be required cast-cure explosive formulations.
EXUDATION AND GROWTH (MANDATORY)	A test performed per U.S. 202.01.010 (Exudation) and U.S. 202.01.011 (Growth) is required for melt-cast explosives. A test performed per U.S. 202.01.010 is required for explosives containing energetic plasticizers.
COMPRESSIVE STRENGTH, MODULUS ELASTICITY AND TENSILE STRENGTH	A test per STANAG 4443 for compressive strength and/or a test per STANAG 4506 for modulus of elasticity and tensile strength may be required for PBX-type materials to evaluate variations of properties on aging. Also, these may be required if the material is for an application where high set-back forces are experienced.
DETONATION VELOCITY	Tests per (U.S. 302.01.001) or (U.S. 302.01.004) may be performed for information purposes.
CRITICAL DIAMETER	Tests performed per (U.S. 302.01.003) are used to find the smallest diameter that can support a steady state detonation.
MATERIAL SAFETY DATA SHEET (MSDS) (MANDATORY)	Shall be prepared in the early stages of the development of the explosive material.

MANDATORY/OPTIONAL DATA	Table 2 – BOOSTER HIGH EXPLOSIVES TESTS/ REQUIREMENTS (Continued)
HAZARD OR INTERIM HAZARD CLASSIFICATION	Tests are performed per the latest versions of TB 700-2, STANAG 4123, or UN Orange Book.
RECORDING AND ISSUING DATA	Reports, Specifications, and Qualification certification shall be in accordance with Chapter 5 of this AOP.
PRODUCIBILITY STATEMENT	An advisory statement on the producibility, processability, and safe-handling characteristics of the material provided to the Qualification Authority.

#Top

c. Requirements for Main Charge High Explosives: No mandatory pass or fail criteria are assigned. Advisory criteria are presented for several measures of sensitivity. Failure to meet some or all of the advisory criteria is normally cause for rejection of the explosive by the Service Qualification Authority. An exception to this preference for rejection is made for impact and friction sensitivity for Plastic Bonded explosives (PBX), melt castable formulations and composite materials containing ammonium perchlorate or similar materials. Though they have a history of safe and satisfactory use, these explosive materials ignite easily and thus have sensitivities, as determined in the impact and friction tests, which could lead to rejection. A thorough appraisal of all relevant safety data must be made before any explosive is rejected. If a preponderance of the tests listed below indicate that the explosive is in the same sensitivity range as booster explosives, the Service Qualification Authority may require that the booster tests and criteria shown above for booster high explosives apply. Even though multiple tests are listed for some stimuli, it is necessary to conduct only one test for each unless otherwise directed by the Service Qualification Authority. Table 3 lists the data required, tests performed, and advisory acceptance criteria for Main Charge High Explosives:

Table 3- MAIN CHARGE HIGH EXPLOSIVES	
MANDATORY/OPTIONAL DATA	TESTS/ REQUIREMENTS
IMPACT SENSITIVITY (MANDATORY)	The new explosive is compared both to a Type I or II, Class 5 RDX conforming to MIL-DTL-398, measured contemporaneously with the candidate explosive, and to a qualified main charge explosive. The advisory criterion is that the sensitivity should be no greater than that of Comp B conforming to MIL-C-401, cast at a density of 1.65 g/cm³. Normally one of the following impact tests is used: ERL/Bruceton (U.S. 201.01.001), Bureau of Mines (U.S. 201.01.003, Los Alamos Impact (U.S. 201.01.004), BAM (U.S. 201.01.005) or one of the NATO STANAG 4489 tests.
SHOCK SENSITIVITY (MANDATORY)	Using the NOL LSGT, (U.S. 201.04.002) or the appropriate STANAG 4488 test, the advisory criterion is that the sensitivity should be no greater than that of Comp B conforming to MIL-C-401, cast at a density of 1.65 g/cm³. Other tests that may be appropriate, based on the critical diameter of the candidate explosive, are: Expanded LSGT (U.S. 201.04.001), IHE Gap Test (U.S. 201.04.005) or Super LSGT (U.S. 201.04.004).

MANDATORY/OPTIONAL DATA	Table 3 - MAIN CHARGE HIGH EXPLOSIVES TESTS/ REQUIREMENTS (Continued)
FRICTION SENSITIVITY (MANDATORY)	The candidate explosive is compared to a Type I or II, Class 5 RDX conforming to MIL-DTL-398, measured contemporaneously with the candidate explosive, and to a qualified main charge explosive. The advisory criterion is that the sensitivity should be no greater than that of Comp B conforming to MIL-C-401, cast at a density of 1.65 g/cm³. All samples derived from melt-cast or pressed formulations should be tested in granular form. Samples derived from cast-cured formulations where ammonium perchlorate is not present should be tested in strip form that can be simply cut from a larger piece of sample. Samples derived from cast-cured formulations where ammonium perchlorate is present should be tested in strip form that has been specially prepared for this test. The latter special preparation is necessary to ensure the ammonium perchlorate is undamaged from the cutting procedure and fully coated by the binder system. Normally one of the following tests is used: ABL Sliding Friction (U.S. 201.02.005), Rotary Friction (U.S. 201.02.004), Steel/Fiber Shoe Friction (U.S. 201.02.008), BAM Friction (U.S. 201.02.006) or one of the STANAG 4487 tests.
ELECTROSTATIC SENSITIVITY (MANDATORY)	The candidate explosive is compared both to a Type I or II, Class 1 or Class 5 RDX conforming to MIL-DTL-398, measured contemporaneously with the candidate, and to a qualified main charge explosive. The advisory criterion is that the electrostatic sensitivity is no greater than that of Comp B conforming to MIL-C-401, cast at a density of 1.65 g/cm³. Normally one of the following tests is used: Electrostatic Discharge (ESD), (U.S. 201.03.001), (U.S. 201.03.002), (U.S. 201.03.003),
IGNITION SENSITIVITY	Using DTA (U.S. 202.01.007), DSC (U.S. 202.01.020), or STANAG 4491 tests, Exotherm Peak should be greater than 180ºC at 5 ºC/min.
HOT-WIRE IGNITION	This test determines whether the candidate explosive is sensitive to initiation when in contact with an electrically energized (hot) wire. The test used is U.S. 202.01.006.
THERMAL STABILITY (MANDATORY)	The advisory criterion is no more than 2 ml gas evolved per gram of explosive per 48 hours at 100 °C. Normally, one of the following tests is used: VTS (U.S. 202.01.001), Modified VTS (U.S. 202.01.022), or STANAG 4556 tests. Using the Chemical Reactivity Test (U.S. 204.01.001) the advisory criterion is 4 ml gas evolved per gram of explosive per 22 hours at 120 °C.
EXPLOSION TEMPERATURE	Test per U.S. 202.01.016 or U.S. 202.01.023. Hazardous Component Safety Data Statement (HCSDS) requires this test.
CRITICAL TEMPERATURE SELF-HEATING (MANDATORY)	The advisory criterion is a calculated critical temperature of not less than 180°F (82.2°C) for 500 days for a given geometry and mass. Self-heating is assessed either experimentally or by calculation. Normally, test data from DTA (U.S 202.01.007), DSC (U.S. 202.01.020), or STANAG 4515 experiments are used. The critical temperature is estimated using U.S. 202.01.012. The “One Liter Cook-Off” test (U.S. 202.01.021) is used to determine, experimentally, the self-heating temperature and severity of reaction of melt-cast compounds or formulations in unconfined, spherical geometry.

MANDATORY/OPTIONAL DATA	Table 3 - MAIN CHARGE HIGH EXPLOSIVES TESTS/ REQUIREMENTS (Continued)
AGING PROPERTIES (MANDATORY)	An aging protocol shall be established (See Chapter 8 above) and, if the explosive is Qualified for joint military use, the aging protocol must be approved and coordinated among the Services.
DENSITY/BULK DENSITY	Required for information purposes. Normally, Pycnometry (U.S. 102.01.071) or other scientifically acceptable tests can be used.
GLASS TRANSITION TEMPERATURE	May be required for Plastic Bonded explosives (PBX) formulations. Test per STANAG 4540 or other scientifically acceptable tests can be used.
COMPATIBILITY (MANDATORY)	The interaction of the candidate explosive with common materials (e.g., metals, adhesives, acids, bases) with which it may come into contact in production and use is assessed. The results for the candidate explosive in a 1:1 mixture with the material being tested for compatibility are compared with the results for the candidate explosive alone. Normally one of the following tests is used: DTA (U.S 202.01.007), DSC (U.S. 202.01.020), VTS (U.S. 202.01.001), Modified VTS (U.S. 202.01.022), or CRT (U.S. 204.01.001). TGA (U.S. 202.01.008) may be used if there is no heat change but a mass change may be occurring. The criterion when using DTA or DSC is a change of no more than 10°C in the exotherm peak temperature, measured at a heating rate of 10°C/minute or less. Using VTS (U.S. 202.01.001) or Modified VTS (U.S. 202.01.022) the criterion is no more than 2 ml gas evolved per gram of explosive per 48 hours at 100°C. Using CRT, gas volume produced is no more than 4 cm^3/g.
TOXICITY EVALUATION (MANDATORY)	Evaluation of the toxicity must be performed. This includes assessment of the ingredients, combustion products and by-products of the processing of the explosive. Support of the evaluation is available from the Operational Toxicology Branch, Air Force Research Laboratory Deployment and Sustainment Division, Wright Patterson AFB, Ohio.
COMPRESSIVE STRENGTH, MODULUS ELASTICITY AND TENSILE STRENGTH	Test per STANAG 4443 for compressive strength and/or test per STANAG 4506 for modulus of elasticity and tensile strength may be required for PBX-type materials to evaluate variations of properties on aging. May also be required if the material will be used in an application where high set-back forces are experienced.
DETONATION VELOCITY	For information purposes. Test per U.S. 302.01.001, U.S. 302.01.004 or other suitable tests.
COEFFICIENT OF THERMAL EXPANSION	May be required for information purposes. Test performed per STANAG 4525 or other scientifically acceptable tests can be used.
CRITICAL DIAMETER	Test per U.S. 302.01.003 or other scientifically acceptable tests can be used to find the smallest diameter that can support a steady state detonation.
EXUDATION AND GROWTH	Test performed per Exudation Test (U.S. 202.01.010) and Growth (U.S. 202.01.011) is required for melt-cast explosives. Test performed per U.S. 202.01.010 is required for explosives containing energetic plasticizers.
MATERIAL SAFETY DATA	Shall be prepared in the early stages of the development of the

SHEET (MSDS) (MANDATORY)	explosive material.

MANDATORY/OPTIONAL DATA	Table 3 - MAIN CHARGE HIGH EXPLOSIVES TESTS/ REQUIREMENTS (Continued)
HAZARD OR INTERIM HAZARD CLASSIFICATION	Tests are performed per the latest versions of TB 700-2, STANAG 4123, or UN Orange Book.
RECORDING AND ISSUING DATA	Reports, Specifications, and Qualification certification shall be in accordance with Chapter 5 of this AOP.
PRODUCIBILITY STATEMENT	An advisory statement on the producibility, processability, and safe-handling characteristics of the material provided to the Qualification Authority.
EIDS DATA	For Extremely Insensitive Detonating Substance candidate materials, tests are conducted in accordance with TB 700-2, STANAG 4123, or UN Orange Book.
GENERIC HARDWARE TESTS	Insensitive munition testing for slow cook-off, fast cook-off, bullet impact and fragment impact in generic test hardware selected by the Qualification Authority may be required for qualification. Tests in accordance with STANAG 4439 and AOP-39 are normally used.

#Top

d. Requirements for Fuel Air Explosives: These are materials which, in their military application, exhibit explosive properties when dispersed in air and initiated by a conventional high explosive. In general, the individual dispersed materials themselves may not be explosive. However, qualification, as described herein, is required for any conventional liquid, slurry, gel, or solid explosives used in fuel-air weapon applications. Because of the nature of these materials and the manner in which they are applied, qualification is generally concurrent with Final (Type) Qualification as defined in Chapter 4 above. Specific data requirements and tests for qualification are assigned on a case-by-case basis by the Service Qualification Authority. Tests per U.S. 302.02.004 may be required to assess the detonability of fuel-air mixtures. No pass or fail criterion is assigned since suitability for service is almost completely dependant on munition or end-item design.

10.7.4.15.2 Propellants: Propellants are generally qualified in accordance with a specific application. The final formulations are established late in the development cycle of the end item and requests for qualification may be concurrent with requests for Final (Type) Qualification. Advisory pass or fail criteria are applied for most sensitivity tests performed. An exception to this preference for rejection is made for impact and friction sensitivity for composite propellants containing ammonium perchlorate or similar materials. Though these have a history of safe and satisfactory use, these propellants have sensitivities, as determined in the impact and friction tests, which could lead to rejection. A thorough appraisal of all relevant safety data must be made before any propellant is rejected. In general, the data requirements given in STANAG 4170 (latest edition) and in this section of AOP-7 are used. However, other tests may be required by the Service Qualification Authority. Even though multiple tests are listed for some stimuli, it is necessary to conduct only one test for each unless otherwise directed by the Service Qualification Authority. A brief description of tests used to obtain the data required by the National Authorities is provided in the Test Information Sheets provided below in section 10.7.15.7. The following tables list of mandatory and optional data and appropriate tests for propellants:

a. Requirements for Solid Gun Propellants:

Table 4 - SOLID GUN PROPELLANTS	
MANDATORY/OPTIONAL DATA	TESTS/ REQUIREMENTS
IMPACT SENSITIVITY (MANDATORY)	The new gun propellant is compared to a Type I or II, Class 5 RDX conforming to MIL-DTL-398, measured contemporaneously with the candidate material, and to a qualified gun propellant used in a similar application. No advisory criterion is provided. Normally, one of the following impact tests is used: Bureau of Mines (U.S. 201.01.003), ERL/Bruceton (U.S. 201.01.001), Los Alamos Impact (U.S. 201.01.004), BAM (U.S. 201.01.005) or an appropriate NATO STANAG 4489 test.
FRICTION SENSITIVITY (MANDATORY)	The candidate gun propellant is compared to a Type I or II, Class 5 RDX conforming to MIL-DTL-398, measured contemporaneously with the candidate material, and to a qualified gun propellant used in a similar application. No advisory criterion is provided. Normally, one of the following tests is used: Rotary Friction (U.S. 201.02.004), BAM Friction (U.S. 201.02.006), or an appropriate STANAG 4487 test.
SHOCK SENSITIVITY (MANDATORY)	The shock sensitivity of the candidate gun propellant is compared to a qualified gun propellant used in a similar application. No advisory criterion is provided. Normally, one of the following tests is used: NOL LSGT (U.S. 201.04.002), or an appropriate STANAG 4488 test.
ELECTROSTATIC SENSITIVITY (MANDATORY)	The candidate gun propellant is compared both to a Type I or II, Class 1 or Class 5 RDX conforming to MIL-DTL-398, measured contemporaneously with the candidate, and to a qualified gun propellant used in a similar application. No advisory criterion is provided. Trials are normally performed in accordance with Electrostatic Discharge, ESD, (U.S. 201.03.001), (U.S. 201.03.002), or (U.S. 201.03.003).
IGNITION TEMPERATURE (MANDATORY)	No advisory criterion is provided. The ignition temperature is measured using: DTA (U.S. 202.01.007), DSC (U.S. 202.01.020), U.S. 202.01.023, or STANAG 4491 tests.
THERMAL STABILITY (MANDATORY)	No more than 2 ml gas evolved per gram of propellant per 48 hours at 100 °C. Tests used are: VTS (U.S. 202.01.001), Modified VTS (202.01.022), or STANAG 4556 tests. Using the Chemical Reactivity Test (US 204.01.001) the criterion is 4 ml gas evolved per gram of propellant per 22 hours at 120°C.
EXPLOSION TEMPERATURE	Test per US 202.01.016. Hazardous Component Safety Data Statement (HCSDS) requires this test.
AGING PROPERTIES (MANDATORY)	An aging protocol shall be established (See Chapter 8 above) and, if the propellant is Qualified for joint military use, the aging protocol shall be approved and coordinated among the Services.
COMPRESSIVE STRENGTH, MODULUS OF ELASTICITY AND TENSILE STRENGTH	Test per STANAG 4443 for compressive strength and/or test per STANAG 4506 for modulus of elasticity and tensile strength may be required for materials to evaluate variations of properties on aging. May also be required if the material that will be used in an application where high set-back forces are experienced.

Top

MANDATORY/OPTIONAL DATA	Table 4 – SOLID GUN PROPELLANTS TESTS/ REQUIREMENTS (Continued)
COMPATIBILITY (MANDATORY)	The interaction of the candidate explosive with common materials (e.g., metals, adhesives, acids, bases) with which it may come into contact in production and use is assessed. The results for the candidate explosive in a 1:1 mixture with the material being tested for compatibility are compared with the results for the candidate explosive alone. Normally one of the following tests is used: DTA (U.S 202.01.007), DSC (U.S. 202.01.020), VTS (U.S. 202.01.001), Modified VTS (U.S. 202.01.022), or CRT (U.S. 204.01.001). TGA (U.S. 202.01.008) may be used if there is no heat change but a mass change may be occurring. The criterion when using DTA or DSC is a change of no more than 10°C in the exotherm peak temperature, measured at a heating rate of 10°C/minute or less. Using VTS (U.S. 202.01.001) or Modified VTS (U.S. 202.01.022) the criterion is no more than 2 ml gas evolved per gram of explosive per 48 hours at 100°C. Using CRT, gas volume produced is no more than 4 cm^3/g.
DENSITY/BULK DENSITY	Required for information purposes. Normally, Pycnometry (U.S. 102.01.071) or other scientifically acceptable tests can be used.
TOXICITY EVALUATION (MANDATORY)	Evaluation of the toxicity must be performed. This includes assessment of the ingredients, combustion products and by-products of the processing of the gun propellant. Support of the evaluation is available from the Operational Toxicology Branch, Air Force Research Laboratory Deployment and Sustainment Division, Wright Patterson AFB, Ohio.
COEFFICIENT OF THERMAL EXPANSION	May be required for information purposes. Test performed per STANAG 4525 or other scientifically acceptable tests can be used.
CRITICAL DIAMETER	Test per U.S. 302.01.003 or other scientifically acceptable tests can be used to find the smallest diameter that can support a steady state detonation. This information can help in assessing the shock vulnerability of the granular bed. Based on systems requirements, some data may be required by Service Authorities. This would be on a case by case basis.
BURNING RATE	Normally Closed Bomb Burning Rate (U.S. 302.02.002) is used to provide data to calculate the impetus. Strand Burning Rate (U.S. 302.02.001) may be appropriate in some cases.
EXUDATION	Test performed per U.S. 202.01.010 may be required for propellants containing energetic plasticizers.
MATERIAL SAFETY DATA SHEET (MSDS) (MANDATORY)	Shall be prepared in the early stages of the development of the explosive material.
HAZARD OR INTERIM HAZARD CLASSIFICATION	Tests are performed per the latest versions of TB 700-2, STANAG 4123, or UN Orange Book.
RECORDING AND ISSUING DATA	Reports, Specifications, and Qualification certification shall be in accordance with Chapter 5 of this AOP.
PERFORMANCE PROPERTIES	Calculated values for Flame Temperature, Heat of Explosion, Impetus, and Specific Heat Ratios may be required for information purposes.

#Top

MANDATORY/OPTIONAL DATA	Table 4 – SOLID GUN PROPELLANTS TESTS/ REQUIREMENTS (Continued)
PRODUCIBILITY STATEMENT	An advisory statement on the producibility, processability, and safe-handling characteristics of the material provided to the Qualification Authority.
EIDS DATA	For Extremely Insensitive Detonating Substance candidate materials, tests are conducted in accordance with TB 700-2, STANAG 4123, or UN Orange Book.
GENERIC HARDWARE TESTS	Insensitive munition testing for slow cook-off, fast cook-off, bullet impact and fragment impact in generic test hardware may be required for qualification. Tests in accordance with STANAG 4439 and AOP-39 are normally used.

b. Requirements for Solid Rocket Propellants:

Table 5 - SOLID ROCKET PROPELLANTS	
MANDATORY/OPTIONAL DATA	TESTS/ REQUIREMENTS
FRICTION SENSITIVITY (MANDATORY)	The candidate rocket propellant is compared to a Type I or II, Class 5 RDX conforming to MIL-DTL-398, measured contemporaneously with the candidate material, and, if possible, to a qualified rocket propellant used in a similar application. No advisory criterion is provided; however, the sensitivity of the candidate material should compare favorably with that of a Comparison Explosive. Normally, one of the following tests is used: Rotary Friction (U.S. 201.02.004), BAM Friction (U.S. 201.02.006), or one of the STANAG 4487 tests.
IMPACT SENSITIVITY (MANDATORY)	The data are compared to normal. The candidate rocket propellant is compared to a Type I or II, Class 5 RDX conforming to MIL-DTL-398, measured contemporaneously with the candidate material, and, if possible, to a qualified rocket propellant used in a similar application. No advisory criterion is provided; however, the sensitivity of the candidate material should compare favorably with that of a Comparison Explosive. Normally, one of the following impact tests is used: Bureau of Mines (U.S. 201.01.003), ERL/Bruceton (U.S. 201.01.001), Los Alamos Impact (U.S. 201.01.004), BAM (U.S. 201.01.005) or one of the NATO STANAG 4489 tests.
THERMAL STABILITY (MANDATORY)	The advisory criterion is that there should be no more than 2 ml gas evolved per gram of propellant per 48 hours at 100 °C. Tests used are: VTS (U.S. 202.01.001), Modified VTS (202.01.022), or STANAG 4556 tests. Using the Chemical Reactivity Test (U.S. 204.01.001) the advisory criterion is 4 ml gas evolved per gram of propellant per 22 hours at 120°C.
IGNITION TEMPERATURE (MANDATORY)	No advisory criterion is provided. The ignition temperature is measured using: DTA (U.S. 202.01.007), DSC (U.S. 202.01.020), U.S. 202.01.023, or STANAG 4491 tests.

Top

MANDATORY/OPTIONAL DATA	Table 5 - SOLID ROCKET PROPELLANT TESTS/ REQUIREMENTS (Continued)
SHOCK SENSITIVITY (MANDATORY)	The shock sensitivity of the propellant is assessed. The data are compared to that of a qualified propellant used in a similar role. Normally, the NOL LSGT (U.S. 201.04.002) or an appropriate STANAG 4488 test is used. No advisory criterion is provided; however, the sensitivity of the candidate material should compare favorably with that of the Comparison Explosive. Based on the critical diameter of the propellant and the possibility of obtaining a 1.6 hazard classification, other tests such as Expanded LSGT (U.S. 201.04.001), IHE Gap Test (U.S. 201.04.005) or Super LSGT (201.04.004) may be required by the Qualification Authority.
ELECTROSTATIC SENSITIVITY (MANDATORY)	The propellant is compared to a Type I or II, Class 5 RDX conforming to MIL-DTL-398, measured contemporaneously with the candidate material, and, if possible, to a qualified propellant used in a similar application. No advisory criterion is provided; however, the sensitivity of the test material should compare favorably with that of a Comparison Explosive. Trials are normally performed in accordance with Electrostatic Discharge, ESD, (U.S. 201.03.001), (U.S. 201.03.002), or (U.S. 201.03.003). A large-scale ESD test, such as U.S. 201.03.004 or STANAG 4490, may be required by the Service Qualification Authority for some types of solid propellant.
CRITICAL TEMPERATURE/ SELF HEATING	Self-heating is assessed either experimentally or by calculation. Test data from DTA (U.S 202.01.007), DSC (U.S. 202.01.020), or STANAG 4515 experiments are used.
COMPRESSIVE STRENGTH, MODULUS OF ELASTICITY AND TENSILE STRENGTH	Test per STANAG 4443 for compressive strength and/or test per STANAG 4506 for modulus of elasticity and tensile strength may be required for materials to evaluate variations of properties on aging. May also be required if the material will be used in an application where high set-back forces are experienced.
AGING PROPERTIES (MANDATORY)	An aging protocol shall be established (See Chapter 8 above) and, if the explosive is Qualified for joint military use, the aging protocol shall be approved and coordinated among the Services.
EXPLOSION TEMPERATURE	Test per US 202.01.016. Hazardous Component Safety Data Statement (HCSDS) requires this test.
DENSITY/BULK DENSITY	Required for information purposes. Normally, Pycnometry (U.S. 102.01.071) or other scientifically acceptable tests can be used.
TOXICITY EVALUATION (MANDATORY)	Evaluation of the toxicity must be performed. This includes assessment of the ingredients, combustion products and by-products of the processing of the propellant. Support of the evaluation is available from the Operational Toxicology Branch, Air Force Research Laboratory Deployment and Sustainment Division, Wright Patterson AFB, Ohio.
COEFFICIENT OF THERMAL EXPANSION	May be required for information purposes. Test performed per STANAG 4525 or other scientifically acceptable tests can be used.
CRITICAL DIAMETER	The critical diameter of the candidate rocket propellant is assessed if it is shown to detonate in the shock sensitivity test (see requirement above). Data from tests performed per U.S. 302.01.003 are used to find the smallest diameter that can support a steady state detonation.

Top

MANDATORY/OPTIONAL DATA	Table 5 - SOLID ROCKET PROPELLANT TESTS/ REQUIREMENTS (Continued)
COMPATIBILITY (MANDATORY)	The interaction of the candidate explosive with common materials (e.g., metals, adhesives, acids, bases) with which it may come into contact in production and use is assessed. The results for the candidate explosive in a 1:1 mixture with the material being tested for compatibility are compared with the results for the candidate explosive alone. Normally one of the following tests is used: DTA (U.S 202.01.007), DSC (U.S. 202.01.020), VTS (U.S. 202.01.001), Modified VTS (U.S. 202.01.022), or CRT (U.S. 204.01.001). TGA (U.S. 202.01.008) may be used if there is no heat change but a mass change may be occurring. The criterion when using DTA or DSC is a change of no more than 10°C in the exotherm peak temperature, measured at a heating rate of 10°C/minute or less. Using VTS (U.S. 202.01.001) or Modified VTS (U.S. 202.01.022) the criterion is no more than 2 ml gas evolved per gram of explosive per 48 hours at 100°C. Using CRT, gas volume produced is no more than 4 cm^3/g.
BURNING RATE	Normally, Strand Burning Rate (U.S. 302.02.001) is used to determine burning rate. In some cases Closed Bomb Burning Rate (U.S. 302.02.002) may be used to acquire necessary performance data.
EXUDATION	Test performed per U.S. 202.01.010 may be required for propellants containing energetic plasticizers.
MATERIAL SAFETY DATA SHEET (MSDS) (MANDATORY)	Shall be prepared in the early stages of the development of the explosive material.
HAZARD OR INTERIM HAZARD CLASSIFICATION	Tests are performed per the latest versions of TB 700-2, STANAG 4123, or UN Orange Book.
RECORDING AND ISSUING DATA	Reports, Specifications, and Qualification certification shall be in accordance with Chapter 5 of this AOP.
PRODUCIBILITY STATEMENT	An advisory statement on the producibility, processability, and safe-handling characteristics of the material provided to the Qualification Authority.
EIDS DATA	For Extremely Insensitive Detonating Substance candidate materials, tests are conducted in accordance with TB 700-2, STANAG 4123, or UN Orange Book.
GENERIC HARDWARE TESTS	Insensitive munition testing for slow cook-off, fast cook-off, bullet impact and fragment impact in generic test hardware may be required for qualification. Tests in accordance with STANAG 4439 and AOP-39 are normally used.

#Top

c. Requirements for Liquid propellants: These materials are generally qualified in accordance with a specific application or end use. This class of explosive material includes thixotropic gels and mono- or multi-component liquid propellants used in guns, rocket motors, naval torpedoes, or other military applications. Qualification requests are generally submitted concurrently with the request for Final (Type) Qualification. No pass or fail criteria are assigned or advisory criteria provided for these materials. The decision on whether a material meets the qualification requirements is left to the Service Qualification Authority. Even though multiple tests are listed for some stimuli, it is necessary to conduct only one test for each unless otherwise directed by the Service Qualification Authority. The following data are required to evaluate the overall safety characteristics:

Table 6 – LIQUID PROPELLANTS	
MANDATORY/OPTIONAL DATA	TESTS/ REQUIREMENTS
IMPACT SENSITIVITY (MANDATORY)	The impact sensitivity is compared to that of n-propylnitrate measured contemporaneously with the candidate liquid propellant. No advisory criterion is provided. The impact tests used are: Liquid Explosives Impact (U.S. 201.01.010) or the appropriate NATO STANAG 4489 test.
FRICTION SENSITIVITY (MANDATORY)	The friction sensitivity is compared to that of n-propylnitrate measured contemporaneously with the candidate propellant. No advisory criterion is provided. The friction tests used are: ABL Sliding Friction (U.S. 201.02.005), or the appropriate STANAG 4487 test.
ELECTROSTATIC SENSITIVITY (MANDATORY)	The electrostatic sensitivity is compared to that of n-propylnitrate measured contemporaneously with the candidate propellant. No advisory criterion is provided. The tests used are: ESD, (U.S. 201.03.001), (U.S. 201.03.002), (U.S. 201.03.003), or equivalent tests.
SHOCK SENSITIVITY	The shock sensitivity is assessed. Generally, tests such as NOL LSGT (U.S. 201.04.002), IHE Gap Test (U.S. 201.04.005) or STANAG 4488 tests can be modified to accommodate liquids. Modifications should be approved by the Service Qualification Authority before the trials are performed. No advisory criterion is provided.
FREEZING POINT (MANDATORY)	Any scientifically acceptable method can be used.
ADIABATIC COMPRESSION SENSITIVITY	Sensitivity is evaluated using the U-Tube Adiabatic Compression Sensitivity Test (U.S. 202.02.001) or other scientifically acceptable tests.
FLASH POINT	The test is performed and the results are reported for information purposes. No advisory criterion is provided. The test normally used is U.S. 201.08.002. TGA (U.S. 202.01.008) may be used for liquid propellants with low volatility.
MINIMUM PRESSURE FOR VAPOR PHASE IGNITION	The test is performed and the results are reported for information purposes. The minimum pressure for vapor phase ignition is verified using U.S. 201.08.001. No advisory criterion is provided.
THERMAL CHARACTERIZATION	The minimum temperature for exotherm onset and the ignition temperature is determined using DTA (U.S 202.01.007), DSC (U.S. 202.01.020), CRT (US 204.01.001), STANAG 4515 tests, or TGA (US 202.01.008) (if mass is being lost in the test). No advisory criterion is provided.
COMPATIBILITY (MANDATORY)	The interaction of the liquid propellant with common materials is assessed. The results for the propellant in a 1:1 mixture with the material being tested are compared with the results for the candidate propellant alone. The advisory criterion when using DTA or DSC is a change of no more than 10°C in the exotherm peak temperature, measured at a heating rate of 10°C/minute or less. See U.S. 203.01.001 for details.
SPECIFIC GRAVITY	May be required for information purposes. Normally any scientifically acceptable tests can be used.
HAZARD CLASSIFICATION/INTERIM HAZARD CLASSIFICATION	Tests are performed per the latest versions of TB 700-2, STANAG 4123, or UN Orange Book.
AGING PROPERTIES (MANDATORY)	An aging protocol shall be established (See Chapter 8 above) and, if the propellant is being Qualified for joint military use, the aging protocol shall be approved by and coordinated among the Services.

Top

MANDATORY/OPTIONAL DATA	Table 6 - LIQUID PROPELLANTS TESTS/ REQUIREMENTS (Continued)
MATERIAL SAFETY DATA SHEET (MSDS) (MANDATORY)	Shall be prepared in the early stages of the development of the explosive material.
TOXICITY EVALUATION (MANDATORY)	Evaluation of the toxicity must be performed. This includes assessment of the ingredients, combustion products and by-products of the processing of the liquid propellant. Support of the evaluation is available from the Operational Toxicology Branch, Air Force Research Laboratory Deployment and Sustainment Division, Wright Patterson AFB, Ohio.
RECORDING AND ISSUING DATA	Reports, Specifications, and Qualification certification shall be in accordance with Chapter 5 of this AOP.
PRODUCIBILITY STATEMENT	An advisory statement on the producibility, processability, and safe-handling characteristics of the material provided to the Qualification Authority.

10.7.4.15.3 Pyrotechnics Materials: Pyrotechnics are qualified in accordance with requirements of a specific application and the Qualification requests may be concurrent with the request for Final (Type) Qualification. These materials are quite sensitive to friction and impact. However, they have a history of safe and satisfactory use and a thorough appraisal of all relevant safety data must be made before the candidate pyrotechnic is rejected.

a. Mandatory Tests and Data Requirements**:** No passing criteria are assigned; however, advisory criteria are provided for each stimulus. Even though multiple tests are listed for some stimuli, it is necessary to conduct only one test for each unless otherwise directed by the Service Qualification Authority. Table 7 lists the data requirements and appropriate tests for pyrotechnics:

Table 7 – PYROTECHNICS	
MANDATORY/OPTIONAL DATA	TESTS/ REQUIREMENTS
IMPACT SENSITIVITY (MANDATORY)	The impact sensitivity is compared to that of a Type I or II, Class 5 RDX standard conforming to MIL-DTL-398, measured contemporaneously with the candidate pyrotechnic and, if possible, to a qualified pyrotechnic material used in a similar application. No advisory criterion is provided; however, the sensitivity of the candidate material should compare favorably with that of the Comparison Material. The impact tests normally used are: ERL/Bruceton (U.S. 201.01.001), Bureau of Mines (U.S. 201.01.003), Los Alamos Impact (U.S. 201.01.004), BAM (U.S. 201.01.005) or an appropriate NATO STANAG 4489 test. The Ball Drop Impact (U.S. 201.01.002) is used to quantify impact sensitivity if the other methods fail.
ELECTROSTATIC SENSITIVITY (MANDATORY)	The electrostatic sensitivity is compared to that of a Type I or II, Class 5 RDX standard conforming to MIL-DTL-398, measured contemporaneously with the candidate pyrotechnic and, if possible, to a qualified pyrotechnic material used in a similar application. No advisory criterion is provided; however, the sensitivity of the candidate material should compare favorably with that of the Comparison Material. The ESD tests normally used are U.S. 201.03.001, U.S. 201.03.002, or U.S. 201.03.003.

Top

MANDATORY/OPTIONAL DATA	Table 7 - PYROTECHNICS TESTS/ REQUIREMENTS (Continued)
FRICTION SENSITIVITY (MANDATORY)	The friction sensitivity is compared to that of a Type I or II, Class 5 RDX standard conforming to MIL-DTL-398, measured contemporaneously with the candidate pyrotechnic and, if possible, to a qualified pyrotechnic material used in a similar application. No advisory criterion is provided; however, the sensitivity of the candidate material should compare favorably with that of the Comparison Material. The friction tests normally used are: ABL Sliding Friction (U.S. 201.02.005), Rotary Friction (U.S. 201.02.004), BAM (U.S. 201.02.006), Steel/Fiber Shoe (U.S. 201.02.008) or an appropriate STANAG 4487 test.
IGNITION TEMPERATURE (MANDATORY)	Using DTA (U.S. 202.01.007), DSC (U.S. 202.01.020) or STANAG 4491 tests, Exotherm Peak should be greater than 180ºC at 5ºC/min.
DENSITY/BULK DENSITY	Required for information purposes. Normally, Pycnometry (U.S. 102.01.071) or other scientifically acceptable tests can be used.
HAZARD CLASSIFICATION/INTERIM HAZARD CLASSIFICATION	Tests are performed per the latest versions of TB 700-2, STANAG 4123, or UN Orange Book.
THERMAL STABILITY (MANDATORY)	The advisory criterion is that no more than 2 ml gas is evolved per gram of pyrotechnic per 48 hours at 100°C when using the Vacuum Thermal Stability (VTS) (U.S. 202.01.001), Modified VTS (U.S. 202.01.022) or STANAG 4556. When using CRT (U.S. 204.01.001) the passing criterion is 4 ml gas evolved per gram of explosive per 22 hours at 120°C
THERMAL CHARACTERIZATION/SELF-HEATING	The minimum temperature for exotherm onset and the ignition temperature is determined using DTA (U.S 202.01.007), DSC (U.S. 202.01.020), CRT (U.S. 204.01.001), or STANAG 4515 tests. TGA (U.S. 202.01.008) is used if mass is being lost in the test. Self-heating is assessed by calculation. The critical temperature is estimated using U.S. 202.01.012.
COMPATIBILITY (MANDATORY)	The interaction of the candidate explosive with common materials (e.g., metals, adhesives, acids, bases) with which it may come into contact in production and use is assessed. The results for the candidate explosive in a 1:1 mixture with the material being tested for compatibility are compared with the results for the candidate explosive alone. Normally one of the following tests is used: DTA (U.S 202.01.007), DSC (U.S. 202.01.020), VTS (U.S. 202.01.001), Modified VTS (U.S. 202.01.022), or CRT (U.S. 204.01.001). TGA (U.S. 202.01.008) may be used if there is no heat change but a mass change may be occurring. The criterion when using DTA or DSC is a change of no more than 10°C in the exotherm peak temperature, measured at a heating rate of 10°C/minute or less. Using VTS (U.S. 202.01.001) or Modified VTS (U.S. 202.01.022) the criterion is no more than 2 ml gas evolved per gram of explosive per 48 hours at 100°C. Using CRT, gas volume produced is no more than 4 cm^3/g.
AGING PROPERTIES (MANDATORY)	An aging protocol shall be established (See Chapter 8 above) and, if the pyrotechnic being Qualified for joint military use, the aging protocol shall be approved by and coordinated among the Services.

Top

MANDATORY/OPTIONAL DATA	Table 7 - PYROTECHNICS TESTS/ REQUIREMENTS (Continued)
TOXICITY EVALUATION (MANDATORY)	Evaluation of the toxicity must be performed. This includes assessment of the ingredients, combustion products and by-products of the processing of the pyrotechnic. Support of the evaluation is available from the Operational Toxicology Branch, Air Force Research Laboratory Deployment and Sustainment Division, Wright Patterson AFB, Ohio.
MATERIAL SAFETY DATA SHEET (MSDS) (MANDATORY)	Shall be prepared in the early stages of the development of the explosive material.
RECORDING AND ISSUING DATA	Reports, Specifications, and Qualification certification shall be in accordance with Chapter 5 of this AOP.
PRODUCIBILITY STATEMENT	An advisory statement on the producibility, processability, and safe-handling characteristics of the material provided to the Qualification Authority.

10.7.15.5 TESTS PERFORMED TO OBTAIN MANDATORY OR OPTIONAL DATA

a. In general, the tests acceptable to the U.S. Service Qualification authorities and used to acquire the data to satisfy the requirements of STANAG 4170 are described in Standardization Agreements, STANAGS, prepared by the AC/326 Subgroup 1 (Energetic Materials) and in test information sheets and test descriptions catalogued in this document. The STANAGs that may be used from time to time by the Service Qualification Authorities are listed below. The other tests used by the Qualification authorities and not necessarily covered by STANAGS are described in the test information sheets and test description section provided below.

	Tests	STANAG No
(1)	Uniaxial Compressive	STANAG 4443
(2)	Impact Sensitivity (Drop-Hammer)	STANAG 4489
(3)	Friction Sensitivity	STANAG 4487
(4)	Electrostatic Sensitivity	STANAG 4490
(5)	Gap Shock Sensitivity	STANAG 4488
(6)	Thermal Sensitivity	STANAG 4491
(7)	Uniaxial Tensile	STANAG 4506
(8)	Stress Relaxation in Tension	STANAG 4507
(9)	Temperature of Ignition	STANAG 4491
(10)	Thermal Characterization (DTA, DSC, & TGA)	STANAG 4515
(11)	Thermomechanical Analysis (TMA)	STANAG 4525
(12)	Chemical Stability – NC Propellants	STANAG 4527
(13)	Dynamic Mechanical Analysis (DMA)	STANAG 4540
(14)	Vacuum Stability	STANAG 4556
(15)	Aging of Composite Propellants	STANAG 4581
(16)	Heat Flow Calorimetry	STANAG 4582
(17)	Stability – NC & NG, Propellants with DPA or 2NDPA	AOP-48

Top

10.7.15.6 List of U.S. Test Information Sheets and Test Descriptions

Category 100	MIL-STD 1751A NUMBER	Chemical, Physical & Mechanical Properties Tests
102.01.001		Uniaxial Tensile
102.01.071		Specific Gravity (Density) (Pycnometry)
102.01.251		Thermal Conductivity
102.01.275		Coefficient of Thermal Expansion (Dilatometer)
Category 200		**Hazard Assessment Tests**
201.01.001	1012[a]	Impact - NSWC/NAWC/ERL/Bruceton
201.01.002	1016[a]	Impact - Ball Drop
201.01.003	1014[a]	Impact - Bureau of Mines
201.01.004	1013[a]	Impact - Los Alamos Laboratory
201.01.005	1015[a]	Impact – BAM
201.01.006		Impact - Picatinny Arsenal
201.01.007	1011[a]	Impact - Bureau of Explosives
201.01.008		Impact - Lawrence Livermore Laboratory
201.01.009		Impact - Hercules Radford
201.01.010	1017[a]	Impact – Liquid Explosives
201.02.001		Friction - Bureau of Mines Pendulum
201.02.002		Friction Pendulum - Picatinny Arsenal Method
201.02.003		Friction Sensitivity - NAWC China Lake Method
201.02.004	1023[a]	Friction - Rotary
201.02.005	1021[a]	ABL Sliding Friction
201.02.006	1024[a]	BAM (Julius Peters) Friction
201.02.007		Friction - Hercules Radford AAP
201.02.008	1022[a]	Friction - Steel/Fiber Shoe
201.03.001	1032[a]	Electrostatic Discharge – ARDEC Picatinny Arsenal Method
201.03.002	1033[a]	Electrostatic Discharge - NAWC Method
201.03.003	1031[a]	Electrostatic Discharge - NSWC Method
201.03.004	1034[a]	Electrostatic Sensitivity - Large Scale
201.03.006		Electrostatic Discharge - Hercules Radford AAP Method
201.03.007		Electrostatic Sensitivity - Closed Cup
201.04.001	1043[a]	Shock Sensitivity - Expanded Large-Scale Gap (ELSGT)
201.04.002	1041[a]	Shock Sensitivity - NOL Large-Scale Gap (LSGT)

[a.] These are test descriptions taken from MIL-STD-1751A that will be retired after this document is issued.

Top

Category 200		Hazard Assessment Tests
201.04.003	1042[a]	Shock Sensitivity - NOL Small-Scale Gap (SSGT)
201.04.004	1044[a]	Shock Sensitivity - Super Large-Scale Gap (SLSGT)
201.04.005	1045[a]	Shock Sensitivity – IHE Gap
201.04.006	1046[a]	Shock Sensitivity – Wedge Test
201.04.007		Shock Sensitivity - Picatinny Arsenal
201.04.008		Shock Sensitivity - NSWC Low Pressure - Long Duration Shock
201.04.009		Blasting Cap Test (2-inch Cubes)
201.05.001		SUSAN Projectile Impact
201.08.001	1141[a]	Minimum Pressure for Vapor Phase Ignition - Liquid Propellants
201.08.002		Flash Point - Liquid Propellants
202.01.001	1061[a]	Vacuum Thermal Stability (VTS)
202.01.002		Variable Confinement Cook-Off (VCCT)
202.01.003		Thermal Detonability (Fast Cook-Off) – NAWC (China Lake) Method
202.01.004		Explosion Temperature
202.01.005		Cook-Off Temperature Determination
202.01.006	1151[a]	Hot-Wire Ignition Test
202.01.007	1071[a]	Differential Thermal Analysis (DTA)
202.01.008	1073[a]	Thermogravimetric Analysis (TGA)
202.01.009		100°C Heat Test
202.01.010	1161[a]	Exudation Characteristics
202.01.011	1162[a]	Growth Characteristics
202.01.012	1074[a]	Critical Temperature and Self-Heating
202.01.013		Thermal Stability Test (75°C)
202.01.014		Unconfined Burning
202.01.015		Internal Ignition
202.01.016		5-Second Ignition Temperature
202.01.017		Taliani
202.01.018		Surveillance DB Propellants
202.01.019		Minimum Ignition Temperature
202.01.020	1072[a]	Differential Scanning Calorimetry (DSC)
202.01.021	1075[a]	One Liter Cook-Off
202.01.022	1063[a]	Modified VTS Test
202.01.023		Explosion Temperature Test (U.S. Army ARDEC Method)
202.01.024		Hot Wire Initiability
202.01.025		Slow Cook-Off (U.S. Air Force Eglin AFB Method)
202.02.001		U-Tube Adiabatic Compression Sensitivity
203.01.001		Compatibility with Materials
204.01.001	1062[a]	Chemical Reactivity (CRT)
204.02.001		Environmental Impact of Firings

Top

Category 300		Performance Assessment Tests
301.01.001		Theoretical Performance Calculations
302.01.001	1101[a]	Detonation Velocity
302.01.002		Detonation Velocity - Liquid Propellants
302.01.003	1091[a]	Critical Diameter
302.01.004	1092[a]	Very Small Critical Diameter
302.02.001		Strand Burning Rate (Linear Burning Rate)
302.02.002		Closed Bomb Burning Rate
302.02.003		Burning Characteristics (Configurational)
302.02.004		Burning Characteristics (Loose)
302.03.001	1131[a]	Detonability for Fuel-Air Explosives
302.03.002		Sub-Scale Motor
302.03.003		Hot/Cold Ignition/Burning
302.03.004		Moisture Content of Composition vs. Performance

Top

10.7.15.7 CATALOGUE OF TEST INFORMATION SHEET FOR THE UNITED STATES

NOTE: The Test Information Sheets and Test Descriptions are compiled consecutively in accordance with their Registry Number.

Top

TEST INFORMATION SHEET

1. TYPE OF EXPLOSIVE: High Explosives, Propellant, and Pyrotechnics

2 TEST TITLE: Uniaxial Tensile Test

a. Type of Test: Mechanical Property.

b. Description: The test specimens are prepared by die cutting or milling. Configuration and dimensions use the JANNAF specifications. The JANNAF Class C (dogbone) sample is die cut. The JANNAF Class A specimen, a milled truncated Class C configuration specimen with tabs (usually aluminum) bonded to the ends, is used to obtain more accurate results. The specimens are measured and conditioned at the test temperature for a minimum of one hour prior to testing. An Instron, or equivalent tester with temperature conditioning chamber and appropriate fixtures, load cells, and readout equipment is listed for applying extension to the specimen at a constant crosshead rate.

c. Information Requirements for Assessment: Data from these tests are used to characterize propellant response and failure behavior.

d. Typical Results: Depend on material tested.

e. Repeatability and Reproducibility: Good to excellent

3. NATIONAL REFERENCES:

a. JANNAF Solid Propellant Mechanical Behavior Manual, CPIA Publication 21, Sections 4.3, March 1971, and 4.3.2 October 1988.

b. MIL-STD-2100 (OS), "Military Standard: Propellant, Solid, Characterization of", 30 March 1979.

c. STANAG 4506, “Explosive Materials, Physical/Mechanical Properties, Uniaxial Tensile test.”

Top

TEST INFORMATION SHEET

1. TYPE OF EXPLOSIVE: High Explosives, Propellant, and Pyrotechnics

2. TEST TITLE: Specific Gravity (Density) (Pycnometry)

   a. Type of Test: Physical Property.

   b. Description: This test is used to determine the specific gravity of propellants by immersing the material in a liquid of known specific gravity (or density) and volume, measuring the volume and weight change of the combined materials. If water is used as the immersion liquid, the specific gravity and density values will be equivalent to each other. However, if mercury is used as the immersion material (to prevent penetration of the liquid into pores, surface imperfections, etc. of the propellant), the density is obtained. The use of mercury is a modification of reference (1).

   c. Information Requirements for Assessment: The value of specific gravity (or density) is necessary for calculations in the design of the motor, and/or the determination of output characteristics.

   d. Typical Results: Most propellants have density values about 1.8 g/cc.

   e. Repeatability and Reproducibility: Since the density vs. temperature values of both water and mercury are known and precise, the test is considered very repeatable and reproducible. Accuracy depends on the equipment used.

3. NATIONAL REFERENCES:

   a. MIL-STD-286B, Methods 510.1.1 and 510.2.1, 1 Dec. 1967.

   b. MIL-STD-2100 (OS), "Military Standard: Propellant, Solid, Characterization of, 30 March 1979.

Top

TEST INFORMATION SHEET

1. TYPE OF EXPLOSIVE: High Explosives, Propellant, and Pyrotechnics

2. TEST TITLE: Thermal Conductivity

   a. Type of Test: Physical Property.

   b. Description: The Guarded Meter method used to determine the thermal conductivity of insulating materials (Ref. 1) and the method for estimating the thermal conductivity of leather with the Cenco-Fitch apparatus (Ref. 2) were modified to provide a method to determine the thermal conductivity of explosive materials. This method provides a one-dimensional transient heat conduction between two faces of a flat specimen 102 mm x 102 mm x 6.4 mm. One face of the specimen is heated by a copper plate which is held at a constant temperature, while the opposite face of the specimen yields its heat to a known mass of a thermally isolated copper disc. The temperature-time profile of the isolated disc yields the required thermal conductivity of the specimen.

   c. Information Requirements for Assessment: This test provides background information for qualification of explosive materials.

   d. Typical Results: Depend on material tested.

   e. Repeatability and Reproducibility: Good.

3. NATIONAL REFERENCES:

   a. ANSI/ASTM C177-76.

   b. ANSI/ASTM D2214-70 (76).

Top

TEST INFORMATION SHEET

1. TYPE OF EXPLOSIVE: High Explosives, Propellant, and Pyrotechnics

2. TEST TITLE: Coefficient of Thermal Expansion (Dilatometer)

   a. Type of Test: Physical Property.

   b. Description: Care must be taken to assure that minimum clearances are maintained between explosive charges and containers in the upper range of storage or operating temperatures because of different expansion coefficients of explosives and container materials. The coefficient of thermal expansion is measured with a bulk mercury dilatometer or with a standard laboratory linear expansion test apparatus. If the material is known to be isotropic, its cubic expansion coefficient is calculated by multiplying its linear coefficient by three.

   c. Information Requirements for Assessment: This test provides background information for qualification of explosives.

   d. Typical Results: Depend on material tested.

   e. Repeatability and Reproducibility: Good

3. NATIONAL REFERENCES:

   a. ANSI/ASTM D696-70; 1975.

   b. ANSI/ASTM D864-52; 1978.

Top

TEST DESCRIPTION

1. TYPE OF TEST: Impact Sensitivity- ERL (Explosives Research Laboratory)/Bruceton Apparatus

2. PURPOSE: This test is designed to measure the sensitivity of an energetic material to impact.

3. BACKGROUND: The apparatus is based on the design developed during World War II by the Explosive Research Laboratory of the National Defense Research Committee, located at Bruceton, PA. A more detailed description is provided in references (a) and (b).

4. TEST ARRANGEMENT: The test equipment consists of the following components:

4.1 Guide frame: A vertical framework of rods or rails designed to guide the drop weight during free-fall. This frame should provide a minimum of interference with the drop weight reducing external influences on the drop weight velocity.

4.2 Drop weight: The shape and construction of the drop weight may vary, but it must provide a (2.5-kg (5.5-lb) mass capable of free-falling, repeatedly, from the maximum height of the guide frame. The impacting surface should be steel, hardened and suitably treated to avoid brittleness. Due to the changes in impulse duration, "dead-blow" or shot filled weights are not recommended.

4.3 Anvil: A solid metal base upon which the sample is placed during impact. The anvil should be supported solidly and contained to prevent it from moving during impact. The upper surface should be flat, hardened and perpendicular to the line followed by the drop weight. Multiple sections stacked together are permitted provided the joining faces are parallel, the contact is solid and lateral motion of all segments is restricted. A maximum of two segments is recommended. A diameter of 1.00 to 1.25 inches is recommended. The usual usage employs a disk of 180 grit sandpaper or garnet paper that nearly covers the face of the anvil as the surface upon which the sample is placed. This is referred to as “Type 12 Tools.” When the sandpaper is omitted and the sample is placed directly on the anvil, the arrangement is referred to as “Type 12B Tools,” and the striker and anvil are roughened by sandblasting them with No. 40 carborundum.

4.4 Striker: A solid tool steel mass designed to rest on the sample and transfer the impulse from the drop weight to the sample during impact. The striker should be supported to ensure that it does not move laterally during impact. The support should not restrict vertical motion. The striker and anvil should be aligned and centered under the drop weight. The upper face of the striker should be slightly convex. The lower face of the striker should be flat, hardened and parallel to the upper face of the anvil when in place. Multiple segments stacked together are permitted, provided joining faces are parallel, contact is solid and all segments are supported as described. If multiple segments are used, maximum of two segments is recommended. The diameter of the striker should match the diameter of the anvil.

4.5 Drop weight support: A mechanism shall be included to permit the drop weight to be suspended above the striker at a selectable height and released when desired. This support shall be capable of holding the drop weight at any point along the guide frame. The height of the drop weight when supported shall be measured from the lower face of the weight to the upper face of the striker when properly positioned on a sample. A scale may be attached or inscribed on the guide frame. Units of measure shall be in centimeters. The maximum height of the apparatus shall permit at least 100 cm of free fall. Although an electromagnet may be used to secure the drop weight, a mechanical catch is preferred due to the increased safety provided in a power loss situation.

4.6 Optional components:

4.6.1 A remote and/or powered drop weight lift may be used provided it does not interfere with the weight when released.

4.6.2 Indents, stops or other preset height selectors may be incorporated into the design of the drop weight support. An electronic scale may be used for positioning.

4.6.3 Instrumentation to assist the operator in determining the presence of an energetic reaction may be employed. The use of such a device will be included with reported data. Any such method will include a method of verifying proper function. Complete documentation of the principle used and the basis for interpreting the output shall be kept for the life of the apparatus on which it is used.

4.6.4 Alternative configurations for the anvil and striker for the express purpose of evaluating liquids.

4.6.5 A device to measure velocity of drop weight at impact may be used to eliminate variability introduced by drag on the weight by the guides. It should be noted, however, that the calculations of the 50% height may be greatly complicated by this device and full documentation of the calculation method used must be maintained.

5. PROCEDURE:

5.1 A 35 ± 5 mg sample of material is placed on a square or disk of 180 grit sandpaper. The sandpaper should nearly cover the face of the anvil. Ground or granular materials should form a small pile. Solid materials may be cut into pieces for testing, with each piece weighing 35 ± 5 mg.

5.2 Drop weight heights intervals are based on the log of the height in centimeters, and are adjusted by 0.1 log intervals. A partial table of typical heights follows:

Height (cm)	Log Interval
10.0	1.0
12.6	1.1
15.8	1.2
20.0	1.3
25.1	1.4
31.6	1.5
39.8	1.6
50.1	1.7
63.1	1.8
100.0	2.0
-	-
-	-
-	-
316.2	2.5

5.3 The drop weight is adjusted to the desired height and secured. The sandpaper with the sample is placed on the anvil. The striker is inserted into its holder and gently lowered onto the sample. While observing the sample area, the drop weight is released. After recording the reaction, the drop weight is removed from the striker and the anvil and striker faces are cleaned.

5.4 An examination of the sample remains and tooling is used to help determine whether or not an energetic response occurred.

5.5 The response is recorded as "FIRE" or "No-FIRE" and the height changed for the next shot. If a "FIRE" is detected, decrease the drop height one interval (0.1 log units). If a "No-FIRE" is detected,

increase the height one interval. If the drop height is at the upper or lower limit and a change out of range is indicated, perform the next trial at the same height.

5.6 A minimum of 20 shots per sample is used to determine a 50% point.

6. RESULTS AND DATA:

6.1 The following information shall be reported for this test:

a. Type of Apparatus
b. Hammer Description
c. Striker Description
d. Dimensions
e. Mass of impactor
f. Type of tools used (12, 12b, or modified type 12)
   i.Description of any grit that is used under the sample
g. Sample Weight
h. Method of Endpoint Detection, such as:
i. Sound – Microphone/recorder arrangement, ear
   i. Go/no-Go determination methodology
   ii Smell
   iii Sight – flash, smoke, etc.
   iv All or combination of above
j. Method of Data Reduction, e.g., Bruceton Up/down
k. Number of Drops per Test
l. Number of Test Replications
m. Experimental Material Result (H50) with Standard Deviation
n. Reference Material Result (H50) with Standard Deviation

6.2 The Bruceton (or "stair-case") method of statistical analysis shall be used to determine a 50% point. Reference (c) provides a description of the statistical approach. Typical test data obtained on this apparatus at NSWC, White Oak is shown below:

Explosive	50% Impact Height (cm)
RDX, Type I or II, Class 1	21
RDX, Type I or II, Class 5	18
HMX, Grade B, Class 1 1	19
HMX, Grade B, Class 5 2	28
PETN, Class 4	13
TNT, Type I or II	78

7. SUPPLEMENTAL INFORMATION: The results shall be compared against Type I or II, Class 5 RDX, conforming to MIL-DTL-398, as the reference standard material. A second reference material is required. It should be chosen so that the 50% point for the candidate explosive falls between the values for the two references.

8. NATIONAL REFERENCES:

a. Walker, G. R., Whitbread, E. G., and Hornig, D. C., ed. Manual of Sensitiveness Tests. Valcartier, Quebec, Canada: Canadian Armament Research and Development Establishment. Published for Tripartite Technical Cooperation Program (TTCP), Panel 0-2 (Explosives), Working Group on Sensitiveness, February 1966.

b. NATO STANAG 4489, Explosives, Impact Sensitivity Test(s).

c. Dixon, W. J., and Massey, F. M. Jr., Introduction to Statistical Analysis. 4th Ed. New York: McGraw-Hill Co., Inc., 1983.

TEST DESCRIPTION

1. TYPE OF TEST: Impact Sensitivity - Ball Drop Impact

2. PURPOSE: This test determines the sensitivity to impact of primary explosives.

3. BACKGROUND: This method is the test that is appropriate for determining the impact sensitivity of primary explosives. It was developed at U. S. Army TACOM ARDEC (Picatinny Arsenal).

4. TEST ARRANGEMENT: The Ball Drop Impact Test apparatus, shown in Figure 1, subjects a primary explosive to an impact of a free-falling steel ball.

4.1 Sample size: The standard sample size is 30 mg for each trial.

4.2 Weight: The drop weight is a 0.500-inch diameter steel ball weighing 8.35 grams

4.3 Drop-weight Assembly: The steel ball is guided on a ball track which rises 32-inchesvertically from a steel base. The ball track may be moved up or down and locked in place.

5. PROCEDURE:

5.1 The test sample of approximately 30 mg is placed on the impact block. The sample is spread into a thin layer by moving a straight-edged conductive spatula along the top of the shoulders of the impact block. The steel ball guide is raised to the desired height and locked in place. The loaded impact block is positioned beneath the ball track. A ball track metal shield is used to keep the steel ball in place. The ball track shield is in the lowered position and the steel ball is placed in the track. The ball shield is raised using a cord and the steel ball is allowed to fall onto the sample. If no explosion or reaction occurs, the test is repeated with a fresh sample from successively greater heights until a reaction occurs or until the maximum range of the equipment is reached. If a reaction does occur, fresh samples are tested at successively lower heights until a point of no reaction is reached. Thereafter, a sample will be tested at 1 inch below the level at which the previous sample was tested if that sample reacted, and 1 inch above the level at which the previous one was tested if it did not react.

5.2 A Bruceton up-down method is employed to determine the height, H_{50}, at which the probability of reaction is 50%

5.3 The determination of an explosion or reaction is based on visual observation. Any indication of decomposition (explosion, burning, flash, smoke or charring) is considered a positive reaction.

6. RESULTS AND DATA:

6.1 The following information shall be reported for this test:

a. Sample weight
b. Method of endpoint detection, such as:
    i. Sound – Microphone/recorder Arrangement, Ear
    ii. Go/no Go determination methodology
    iii. Smell
    iv. Sight – Flash, Smoke, Etc.
    v. All or combination of above
c. Number of drops per test
d. Number of test replications
e. Method of data analysis
f. Experimental material result with standard deviation
g. Reference material result with standard deviation

h. 6.2 Typical test data obtained on this apparatus are shown below:

Explosive	H_{50} (in.)
Lead azide, dextrinated	25.6 ±2.8
Lead styphnate	13.9 ± 2.9
NOL-130	11.1 ± 3.9

* H_{50} is the value (from the Bruceton Up and Down Method) at which 50% of the samples react.

7. SUPPLEMENTARY INFORMATION: None.

8. NATIONAL REFERENCES:

Figure 1. Ball Drop Impact Apparatus

Top

TEST DESCRIPTION

1. TYPE OF TEST: Impact Sensitivity - (Drop Hammer) - Bureau of Mines

2. PURPOSE: This test is designed to measure the sensitivity to initiation of an explosive in powder form to the types of mechanical stimuli encountered during manufacture or rough handling.

3. BACKGROUND:

4. TEST ARRANGEMENT:

4.1 The Bureau of Mines impact apparatus subjects an explosive sample to an impact of a free-falling 5-kg drop hammer. This hammer is guided within a steel T-beam framework, which rises 150 inches vertically from a steel base resting on a concrete pier. The hammer is held, prior to dropping, by an electromagnet within a movable yoke. This yoke can be moved up or down, on the hammer's guide rails, by a windlass at the base of the machine. A recording device on the windlass measures the drop height, which is 130 inches maximum. The hammer is released by a manual push-button, which cuts the current to the electromagnet.

4.2 The anvil assembly, mounted on the base of the machine, consists of a hardened steel anvil and a plunger, 1.25 inches in diameter and 6 inches in length, machined to give a sliding fit through a steel guide ring. The drop hammer, when released, strikes the plunger, which transmits the force developed on impact to a small striking pin that fits into a steel cup containing the test sample.

4.3 For tests in which the sample explosive is confined, the striking pin, 0.5 inch in diameter by 0.94 inch in length, Type 440 stainless steel, hardened to 55-60 HRC, is ground and polished to give a snug, freely sliding fit in the sample cup. The striking face of the pin is chamfered to clear the radius at the bottom of the sample cup. The sample cup, which is approximately 0.5 inch in diameter by 0.28 inch deep, Type 302 stainless steel with a wall thickness of 0.005 inch. Reference (a) provides a more detailed description of the test apparatus.

4.4 Figures 1 through 4 provide diagrams of the test setup.

5. PROCEDURE:

5.1 The test sample of approximately 35 mg is placed in the stainless steel sample cup, and the striking pin is gently pressed down on the sample. This assembly is then centered on the anvil by a shallow socket at the lower end of the plunger. The hammer is dropped from a given height onto the plunger. If no explosion or reaction occurs, the test is repeated with a fresh charge from successively greater heights until a reaction occurs or until the maximum range of the equipment is reached. If a reaction does occur, fresh samples are tested at successively lower heights of fall until a point of no reaction is reached. Thereafter, a sample will be tested at a given increment below the level at which the previous sample was tested if that sample reacted, and a given increment above the level at which the previous one was tested if it did not react.

5.2 A height of 50% for ignition probability is attained by using this up-and-down method and analyzing the data statistically. The procedure for determining this height for 50% probability of ignition, and the error therein at a 95% confidence level, is discussed by Dixon and Mood, reference (b), and Dixon and Massey, reference (c).

5.3 The determination of an "explosion or reaction" is based on visual observation. Any indication of decomposition (explosion, burning, flash, smoke or charring) is considered a "go".

6. RESULTS AND DATA:

6.1 The following information shall be reported for this test:

a. Type of Apparatus
b. Hammer Description
c. Striker Description
d. Dimensions
e. Mass of impactor
f. Type of tools used (12 or 12b)
   i. Description of any grit that is used under the sample
   ii. Finish on anvils, if no sandpaper/grit is used
g. Sample Weight
h. Method of Endpoint Detection, such as
i. Sound – Microphone/recorder arrangement,
   i. Go/no Go determination methodology
   ii. Smell
   iii. Sight – flash, smoke, etc.
   iv. All or combination of the above
j. Method of Data Reduction, E.g., Bruceton
k. Number of Drops per Test
l. Number of Test Replications
m. Experimental Material Result (H50) with Standard Deviation
n. Reference Material Result (H50) with Standard Deviation

6.2 Typical results for standard explosives are provided below:

EXPLOSIVE	50%Probability Height	
	(inch)	(cm)
PETN, Class 7	16.93	43
RDX, Class 5	31.10	79
Tetryl	37.00	94
TNT, Type I or II	72.05	183

7. SUPPLEMENTARY INFORMATION:

7.1 The principal difference between this test and the NOL impact - ERL/Bruceton test is the use of sandpaper in the NOL test and the size of the drop weight.

7.2 The results shall be compared against Type I or II, Class 5 RDX, conforming to MIL-DTL-398, as the reference standard material. A second reference material is required. It should be chosen so that the 50% point for the candidate explosive falls between the values for the two references.

8. NATIONAL REFERENCES:

a. Becker, K.R., Bureau of Mines Instrumented Impact Tester. U.S. Department of Interior, Bureau of Mines, Report of Investigations 7670, 1972.
b. Dixon, W.J., and Mood, A.M., “Method for Obtaining and Analyzing Sensitivity Data. Journal of the American Statistics Association. 43: 109-126, 1948.
c. Dixon, W.J., and Massey, A.M. Jr. Introduction to Statistical Analysis. 4th ed., New York: McGraw-Hill Co., Inc., 1983, pp. 318-327.

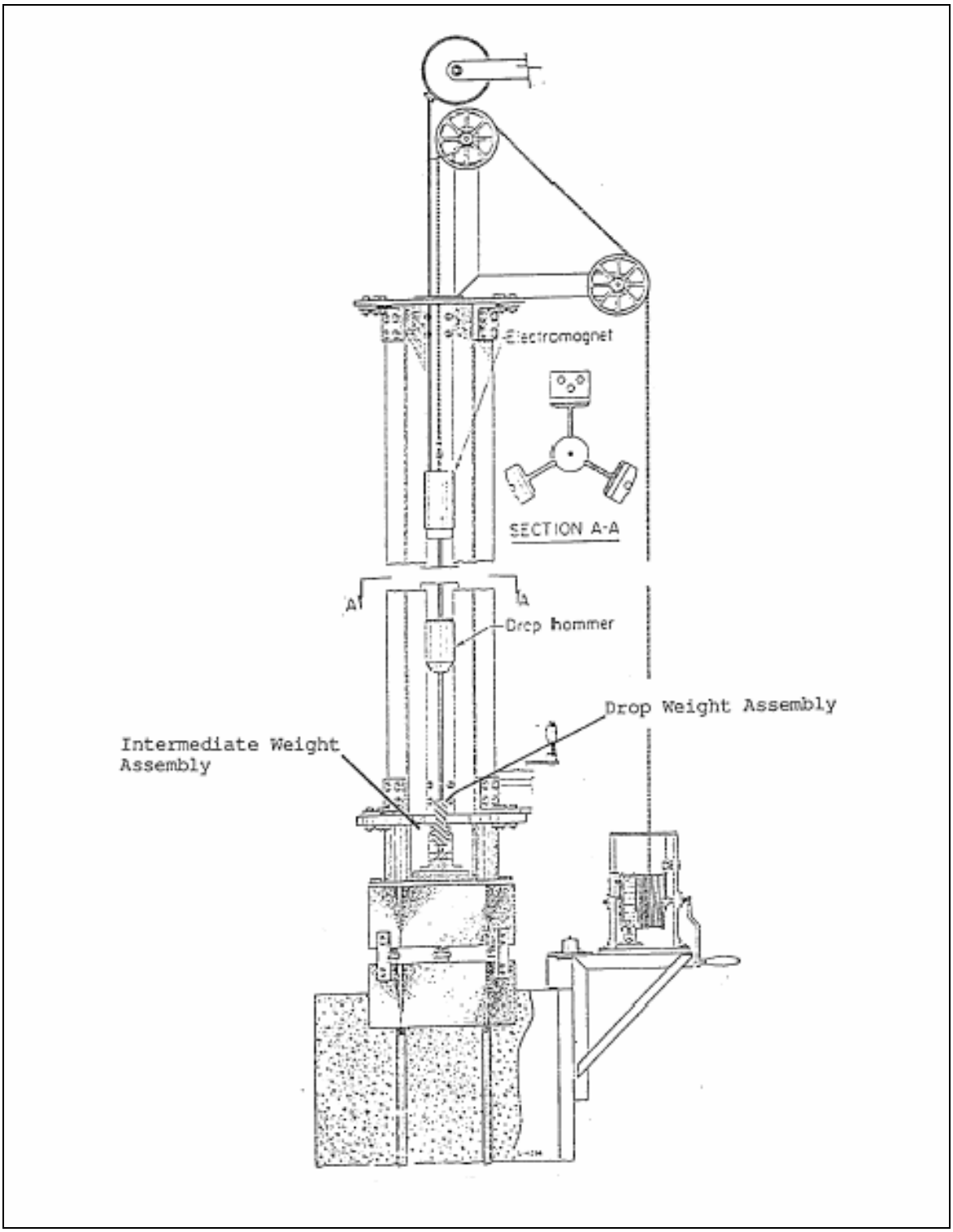

FIGURE 1. Impact test apparatus Assembly (Bureau of Mines Design)

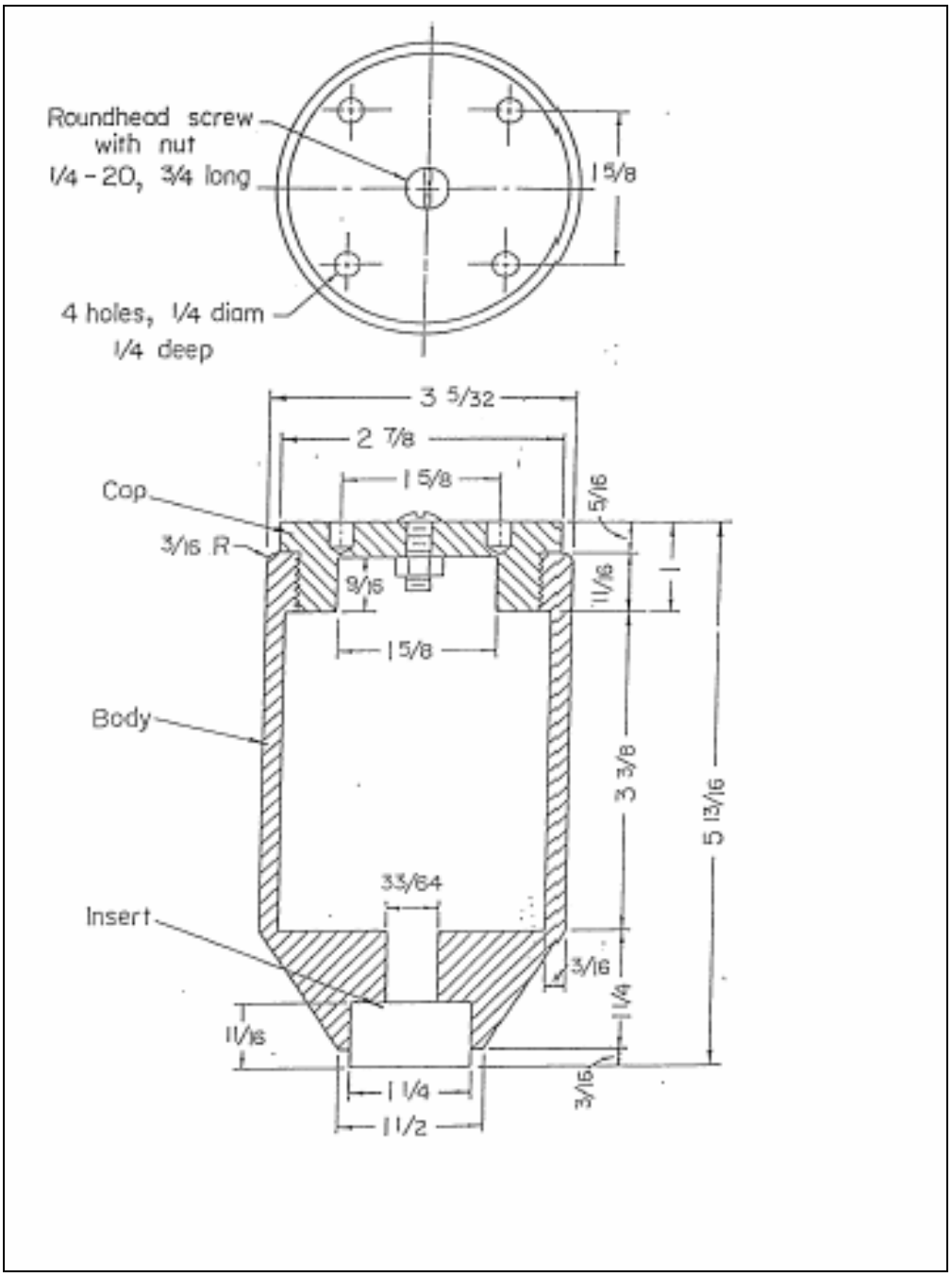

FIGURE 2. Drop weight assembly (Bureau of Mines design)

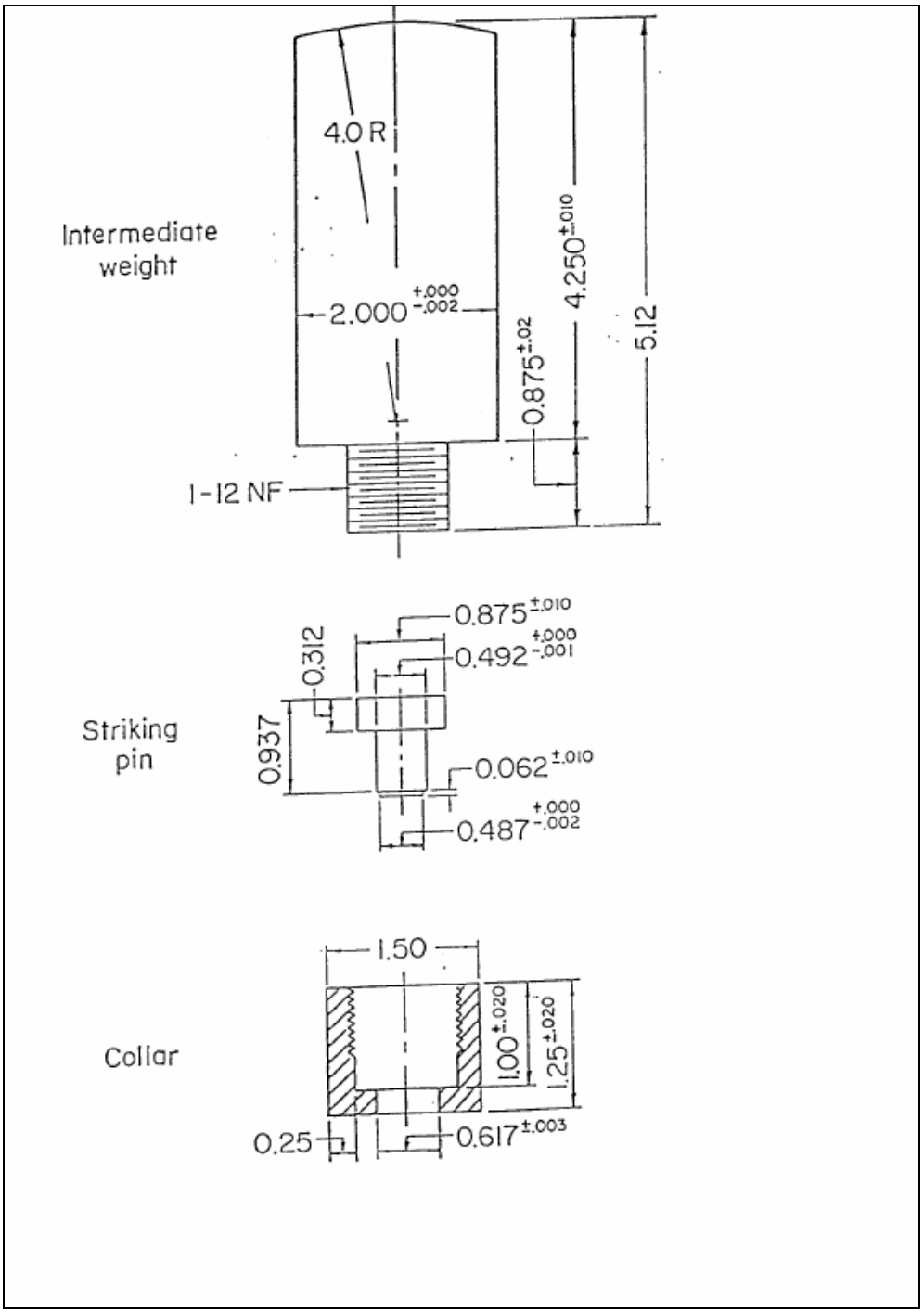

FIGURE 3. Intermediate weight assembly (Bureau of Mines design)

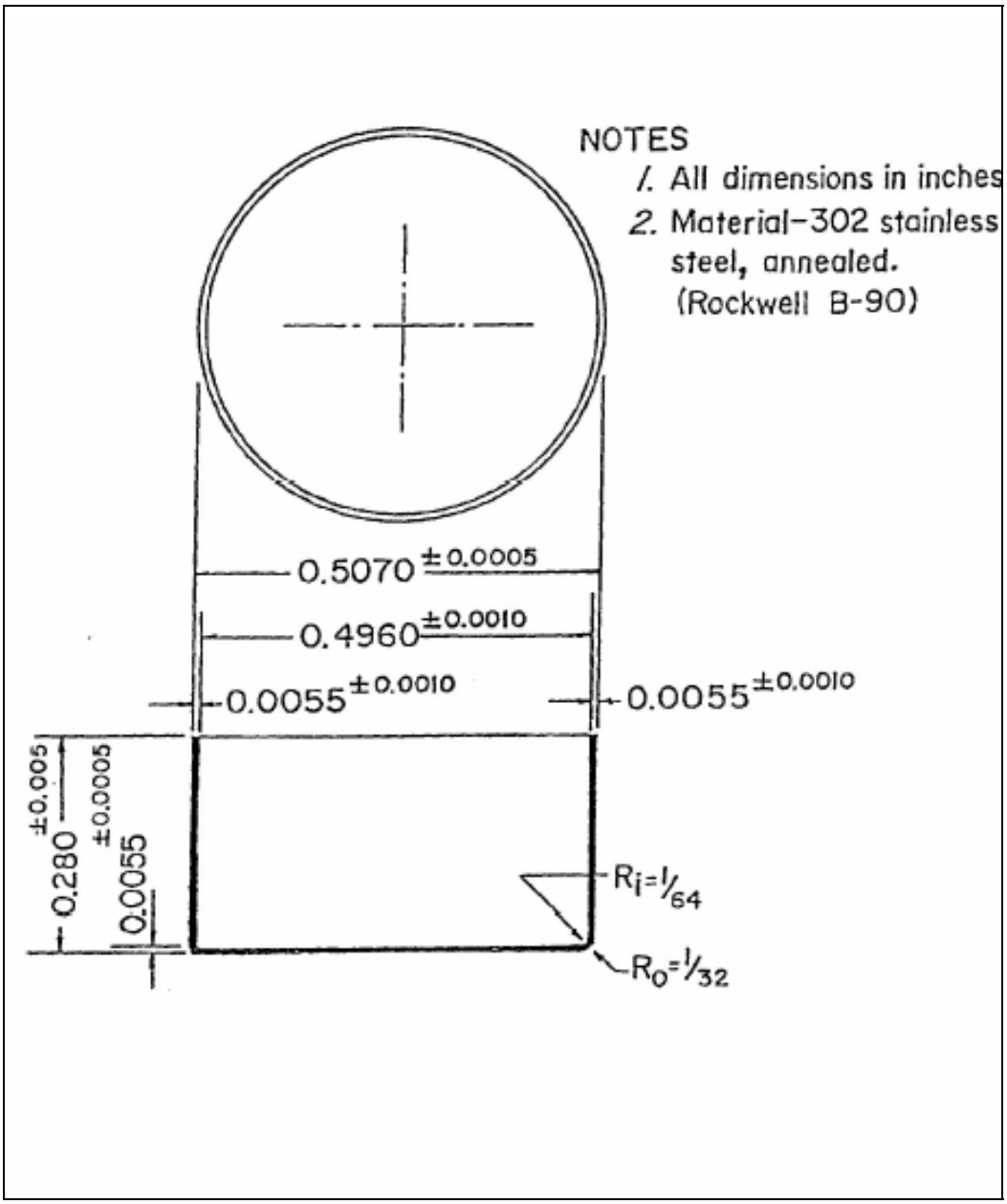

FIGURE 4. Sample Confinement Cup Assemby (Bureau of Mines design)

Top

TEST DESCRIPTION

1. TYPE OF TEST: Impact Sensitivity - (Laboratory Scale) - Los Alamos National Laboratory

2. PURPOSE: This test determines the sensitivity to a normal impact of explosives in powder and liquid form. Results are reported at the 50% point using a Bruceton analysis and are compared to a Type I or II, Class 5 RDX standard conforming to MIL-R-398.

3. BACKGROUND:

3.1 The machine was originally similar to the ERL/Bruceton apparatus described in U.S. 201.01.001. About 1957, some mechanical modifications were introduced for the purpose of improving test reproducibility. Reports indicated that the sensitivity scale was unchanged, however. Reference (a) provides a detailed description of the test.

3.2 The original drop weight was a hollow, conical, truncated nose-tipped cylinder fabricated of tool steel hardened to 60 HRC. The redesigned drop weight has the same general external appearance and the same weight of 5.5 pounds (2.5 kg). It consists of a steel core hardened to 55-58 HRC surrounded by a solid case of Dural (aluminum alloy). The redesign concentrates more of the mass centrally, along the line of impact.

4. TEST ARRANGEMENT:

4.1 The Los Alamos striker is a hardened steel rod, 1.25 inches in diameter and 5.125 inches in length. Like other strikers used in the ERL design, the upper round end of 2.50 inches radius is struck by the drop weight. The lower end is close to the ground such that it is flat and parallel to the upper surface of the anvil. Typically, a piece of sandpaper or garnet paper is placed beneath the sample. This combination of tooling and sandpaper is referred to as “Type 12 tools”.

4.2 Los Alamos uses both Type 12 tools and also a tooling variation that is designated as "Type 12B." Type 12B is different from Type 12 in the following:

a. No sandpaper is used to hold the explosive sample.
b. The striker and anvil surfaces are prepared by sandblasting them with No. 40 Carborundum grit, or an equivalent abrasive.

4.3 Sample response is measured with an electronic noise meter with which a threshold is established to differentiate between explosions (go's) and non-explosions (no-go's). By a series of trials, the drop weight that causes 50% of the test samples to explode is determined. An Altec Model 21BR-180 microphone, Model 165A base and Model 527A power supply (or equivalent microphone), and power supply is connected to the noise meter so that these conditions can be recorded. The microphone is very stable over long periods of time and is not overloaded by the loudest explosions encountered in the test.

4.4 Each test sample consists of about 40 mg explosive. When sandpaper is used (Type 12 tools), a shallow depression is made in the center of the sandpaper so that spherical-grained materials do not roll off while the samples are prepared.

5. PROCEDURE:

5.1 In the standard impact test, 40 mg samples of loose powder are placed in the center of 1-inch squares of garnet paper that is centered on the anvil. To save time, individual samples are not weighed. Instead, the test explosive is volumetrically loaded with a small scoop. Equivalent scoop loads are then used for subsequent shots. By careful application of this method, 40 ± 2 mg samples can be quickly

dispensed. When sufficient material is available, it is blended and sieved. Test samples are then taken from that

portion of the bulk sample that passes through a No. 100 sieve but is retained on a No. 200 sieve. However, when only limited quantities are available, explosives are tested "as received." Solid samples can either be tested as a solid wafer or ground into a powder. When reporting results, the final form of the test sample shall be reported.

5.2 The impact sensitivity of a test explosive is reported as H50, the drop weight in centimeters, which causes a sample to explode 50% of the time. This is determined from a test series with drop heights chosen by the Bruceton stair-step plan. A minimum of 25 shots is conducted to establish the H_{50} level. The striker and anvil are cleaned with an appropriate solvent and inspected for damage after each shot. Drop height steps are selected to have equal 0.1 intervals on a logarithmic scale, with a 10-cm drop height taken as 1.0. Development of the data reduction method is described in reference (b).

6. RESULTS AND DATA:

6.1 The following information shall be reported for this test:

a. Type of Apparatus (e.g., BOE, NOL, ERL, etc)
b. Hammer Description
c. Striker Description
d. Dimensions
e. Mass of impactor
f. Type of tools used (12 or 12b)
   i. Description of any grit that is used under the sample
   ii. Finish on anvils, if no sandpaper/grit is used
g. Sample Weight
h. Method of Endpoint Detection, such as
i. Sound – Microphone/recorder arrangement,
   i. Go/no Go determination methodology
   ii. Smell
   iii. Sight – flash, smoke, etc.
   iv. All or combination of the above
j. Method of Data Reduction, E.g., Bruceton
k. Number of Drops per Test
l. Number of Test Replications
m. Experimental Material Result (H_{50}) with Standard Deviation
n. Reference Material Result (H_{50}) with Standard Deviation

6.2 The drop weight that causes an explosive sample to explode 50% of the time is measured in centimeters. M, the logarithm of the 50% height (H_{50}), is calculated as followed. The lowest drop height step at which shots were fired during the stair-step sequence is assigned an i value of 0. Successive higher steps are assigned values of 1, 2, 3, etc. Then:

$N = \sum n_I$ = total no-go's during series, including step 0
$A = \sum i = n$
$B = \sum i^2 n_i$

where n_i is the number of no-go's at step i. Then:

$M = C + D (A/N \pm 0.5)$ and

$$S = 1.620 \frac{D(NB - A^2)}{N^2}$$

where C is the logarithm of step height 0, D is the step interval in logarithm units, and S is the standard deviation of M. The value of H_{50} is obtained by taking the antilog of M. Table I tabulates H_{50} values for eight common explosives. Long-time control charts are maintained on explosives used as standards in group tests and on other frequently tested materials.

7. SUPPLEMENTARY INFORMATION: The results are compared to the standard reference material which is Type I or Type II, Class 5 RDX, conforming to MIL-DTL-398.

8. NATIONAL REFERENCES:

d. Walker, G. R., Whitbread, E. G., and Hornig, D. C., ed. Manual of Sensitiveness Tests. Valcartier, Quebec, Canada: Canadian Armament Research and Development Establishment. Published for Tripartite Technical Cooperation Program (TTCP), Panel 0-2 (Explosives), Working Group on Sensitiveness, February 1966, pp. 24-26.

e. Statistical Analysis for a New Procedure in Sensitivity Experiments, AMP Report No. 101.lR,SRG-p, No. 40, July 1944, Statistical Research Group, Princeton University. Submitted to Applied Mathematics Panel, National Defense Research Committee.

TABLE I. Results of analysis of impact data (Type 12 tools).

Explosive	No of 25 Shot Tests	H_{50} (cm)	σ (cm)
PETN	14	12.0	1.1
RDX	96	22.2	1.0
HMX	62	26.0	1.8
Cyclotol	15	36.6	2.0
Octol 75/25	12	38.1	2.2
Tetryl	6	41.6	1.3
Comp B	25	59.1	3.6
TNT	23	154.0	7.6

Top

TEST DESCRIPTION

1. TYPE OF TEST: Impact Sensitivity - BAM Impact Test Apparatus

2. PURPOSE: The BAM drop weight test was developed for the evaluation of solid or liquid substances to a normal impact.

3. BACKGROUND: This test has been standardized and is documented in NATO STANAG 4489, reference (a).

4. TEST ARRANGEMENT:

4.1 The device consists of a cast steel block whose base is bolted to a concrete block. Imbedded in the steel block is the main anvil on which an intermediate anvil holding the impact device rests. Guide rails, which are attached to the steel block, facilitate free vertical movement of the drop weight and release mechanism. A toothed rack is incorporated into one of the guide rails to arrest the rebounding drop weight. The drop weight is positioned at various heights by means of a motor driven winch.

4.2 The impact device consists of two coaxially arranged steel cylinders held in place by a cylindrical steel guide ring. The cylinders are roller bearings approximately 10 mm in diameter x 10 mm in height with polished surfaces and rounded edges. Hardness is 58 to 65 HRC. The impact device rests on the intermediate anvil, a steel cylinder approximately 26 mm in diameter x 26 mm in height. It is centered there by means of a steel ring containing six concentrically arranged holes that permit the escape of reaction gases.

4.3 Drop weights of 1, 2, 5, and 10 kg are available for testing. The body of each drop weight has two guide grooves in which it moves between the guide rails. It is equipped with suspension spigot that arrests the weight in the release mechanism, a rebound catch, a height marker, and the cylindrical striker. The striker is made of steel with a hardness of 60 to 63 HRC. Figures 1 through 4 of reference (a) provide schematics of the test set-up and associated hardware drawings.

5. PROCEDURE:

5.1 Solid explosive substances are tested in the dry state. Powdered materials are sieved and the fraction with a particle size ranging from 0.5 to 1.0 mm is used for testing. Pressed, cast, and otherwise compacted substances are crushed and then sieved. Liquid explosive substances are tested without preparation.

5.2 The impact device is prepared by pushing one of the cylinders partially into a guide ring. This open impact device is then positioned on the intermediate anvil fitted with the locating ring. Using a measuring spoon, approximately 35 mg of the substance is placed inside the open impact device making sure that a center heap is formed. The impact device is then closed with a second cylinder by pressing it into a guide ring until it touches the sample. When testing liquids, a pipette is used to transfer 40 mm3 on the lower cylinder. In this case, care must be taken to allow a 10-mm gap between the two cylinders when the impact device is closed.

5.3 The initial starting impact height is selected based on previous experience. A limited number of tests are performed to ensure that results group together fairly well. A 25-shot test is then performed using a Bruceton analysis to determine a 50% point. In judging test results, reactions are classified as either "no reaction," decomposition, or explosion. Decomposition can be recognized by flame, smoke, or by the deposition of soot on the impact device. Both decompositions and explosions are considered positive reactions for the purposes of conducting the statistical analysis.

6. RESULTS AND DATA:

6.1 The following information shall be reported for this test:

a. Type of Apparatus
b. Mass of impactor
c. Sample Weight
d. Method of Endpoint Detection, such as
   i. Sound – Microphone/recorder arrangement,
   ii. Go/no Go determination methodology
   iii. Smell
   iv. Sight – flash, smoke, etc.
   v. All or combination of the above
e. Method of Data Reduction, E.g., Bruceton
f. Number of Drops per Test
g. Number of Test Replications
h. Experimental Material Result (H50) with Standard Deviation
i. Reference Material Result (H50) with Standard Deviation

6.2 Typical results for standard explosives are provided below:

Explosive	50% Probability Height	
	(inch)	(cm)
PETN	14	36
RDX, Class 5	23	58
TNT	68	173

7. SUPPLEMENTARY INFORMATION: The results shall be compared against Type I or II, Class 5 RDX, conforming to MIL-DTL-398, as the reference standard material. A second reference material is required. It should be chosen so that the 50% point for the candidate explosive falls between the values for the two references.

8. REFERENCES:

a. NATO STANAG 4489, Explosives, Impact Sensitivity Test(s).

Top

TEST INFORMATION SHEET

1. TYPE OF EXPLOSIVE: High Explosives, Propellants and Pyrotechnics

2. TEST TITLE: Impact Test - Picatinny Arsenal and Bureau of Mines

a. Type of Test: Hazard Assessment/Sensitivity.

b. Description: This test is conducted using either the Picatinny Arsenal (PA) apparatus or the U.S. Bureau of Mines (BoM) apparatus. Each apparatus is used with two variations, one for solid and one for liquid explosives. The PA apparatus consists of an anvil, two guide bars equipped with an adjustable support for a weight, vented plugs, die cups, and die cup covers. This machine is used with weights of 2 kg, 1 kg, or 1 pound. The lighter weights are used for the more sensitive materials. A yoke equipped with a release pin is attached to two bars, which serve as guides for the falling weight. The yoke can be moved to the desired height and held in place by hand screws. The BoM apparatus consists of an impact block, a plunger and one of three weights (500, 1000, 2000 gm), which can be dropped from any height from 1 to 100 cm. The weight is raised by an encased magnetic coil, held in place by sleeves, and attached to two guide bars. A contact point on the yoke breaks the electromagnetic circuit and allows the weight to fall when it is touched by the contact point on the top of the magnetic coil. The Picatinny apparatus used for this test is based on an older Bureau of Mines, BoM, design and is not to be confused with the apparatus used in AOP-7 Registry No. 201.01.003.

c. Information Requirements for Assessment: Impact sensitivity data on two reference comparison explosives tested on the same machine.

d. Typical Results: 10% Point Using 2 Kg Weight

Explosive (Powder)	PA Apparatus (cm)	BoM Apparatus (cm)
Lead Azide	1.3 (0.5 in)	17
PETN	15.2 (6.0 in)	17
Tetryl	20.3 (8.0 in)	26
RDX	20.3 (8.0 in)	32
HMX	22.9 (9.0 in)	32
Comp B	35.6 (14.0 in)	75
TNT	38.1 (15.0 in)	100

e. Repeatability and Reproducibility: Good on the same machine.

3. NATIONAL REFERENCES:

a. Walker, G. R., Whitbread, E. G., and Hornig, D. C., ed. Manual of Sensitiveness Tests. Valcartier, Quebec, Canada: Canadian Armament Research and Development Establishment. Published for Tripartite Technical Cooperation Program (TTCP), Panel 0-2 (Explosives), Working Group on Sensitiveness, February 1966.

Top

TEST DESCRIPTION

1. TYPE OF TEST: Impact Sensitivity - Bureau of Explosives Apparatus

2. PURPOSE: This test determines the sensitivity to a normal impact of explosives in powder and liquid form.

3. BACKGROUND: Both solid and liquid materials may be tested using this apparatus although the sample assemblies vary for the two. The test setup and assembly is identical to the one described in Test Series 3a(i) for the United Nations classification of explosive substances for transportation as described in reference (a).

4. TEST ARRANGEMENT:

4.1 Solid materials: The test apparatus, as shown in Figure 1, consists of an 8-lb weight suspended between two cylindrical guide rods. The weight is allowed to fall freely from a maximum height of 33 inches (84 cm) onto a plunger and plug assembly that is in contact with the explosive sample. The explosive sample is confined in a cylindrical case of 0.20 ± 0.02 inch in diameter by 0.10 ± 0.02 inch in length. This case is designed to allow free movement of the plug and plunger. The confined sample rests on a die and anvil assembly. The die, casing, anvil, plug and plunger are all fabricated of tool steel, hardened to 50-55 HRC. Mating surfaces and those in contact with the explosive sample are ground to a finish of 0.8 microns (32 micro-inches).

5. PROCEDURE:

5.1 For solid materials: A 10-mg sample is loaded onto the die. Powdered samples are used in bulk form. Solid samples can either be tested as a solid wafer or ground into a powder. When reporting results, the final form of the test sample should be reported. The anvil and die are placed in the housing and the casing screwed down over them. The plug and plunger are then inserted on top of the sample. The drop weight is then released from a predetermined height. A measurement is considered positive if either an audible report or flame is observed. A minimum of 25 tests are run to determine the 50% point using a Bruceton procedure.

5.2 For liquid materials: One drop of the test liquid is placed in the copper cup which has been fixed in the cup positioning block. The striker housing is placed over the cup and into the positioning block. The end of the striker should fit part of the way into the cup, but the positioning block should prevent the striker from actually touching the liquid in the cup. (Friction will hold the cup on the end of the striker when the housing is raised from the positioning block.) The striker housing is then screwed into the anvil housing. The bottom of the copper cup should just touch the anvil when the striker housing is screwed into place. This entire assembly is then placed in the same mechanism used for solid materials. A measurement is considered positive if either an audible report, smoke, or flame is observed. A minimum of 25 tests is run to determine the 50% point using a Bruceton procedure.

6. RESULTS AND DATA:

6.1 The following information shall be reported for this test:

a. Sample weight
b. Method of endpoint detection, such as:
    i. Sound – Microphone/recorder Arrangement, Ear
    ii. Go/no Go determination methodology
    iii. Smell
    iv. Sight – Flash, Smoke, Etc.
    v. All or combination of above

c. Number of drops per test
d. Number of test replications
e. Method of data analysis
f. Experimental material result with standard deviation
g. Reference material result with standard deviation

6.2 Typical test data obtained on this apparatus is shown below:

Test sample	$(H_{50})^*$ Drop Height	
	(cm)	(in)
HMX, Grade B (12μ)	7.9	3.1
RDX 850μ – 30%; 300μ – 30%; 150μ – 15%; 75μ – 25%	9.4	3.7
HNS-II	15.8	6.2

* H_{50} is the value (from the Bruceton Up and Down Method) at which 50% of the samples react.

7. SUPPLEMENTARY INFORMATION:

7.1 References (a) and (b) provide specific pass-fail criteria for transportation.

7.2 A more detailed description of the test apparatus may be obtained from reference (c)

8. NATIONAL REFERENCES:

a. Recommendations on the Transport of Dangerous Goods, Tests and Criteria, United Nations, New York.

b. TB 700-2, Department of Defense Explosives Hazard Classification Procedures. Also known as NAVSEAINST 8020.8B, Air Force TO 11A-1-47, and DLAR 8220.1.

c. Walker, G. R., Whitbread, E. G., and Hornig, D. C., ed. Manual of Sensitiveness Tests, Valcartier, Québec, Canada: Canadian Armament Research and Development Establishment. Published for Tripartite Technical Cooperation Program (TTCP), Panel 0-2 (Explosives), Working Group on Sensitiveness, February 1966, pp. 46-50.

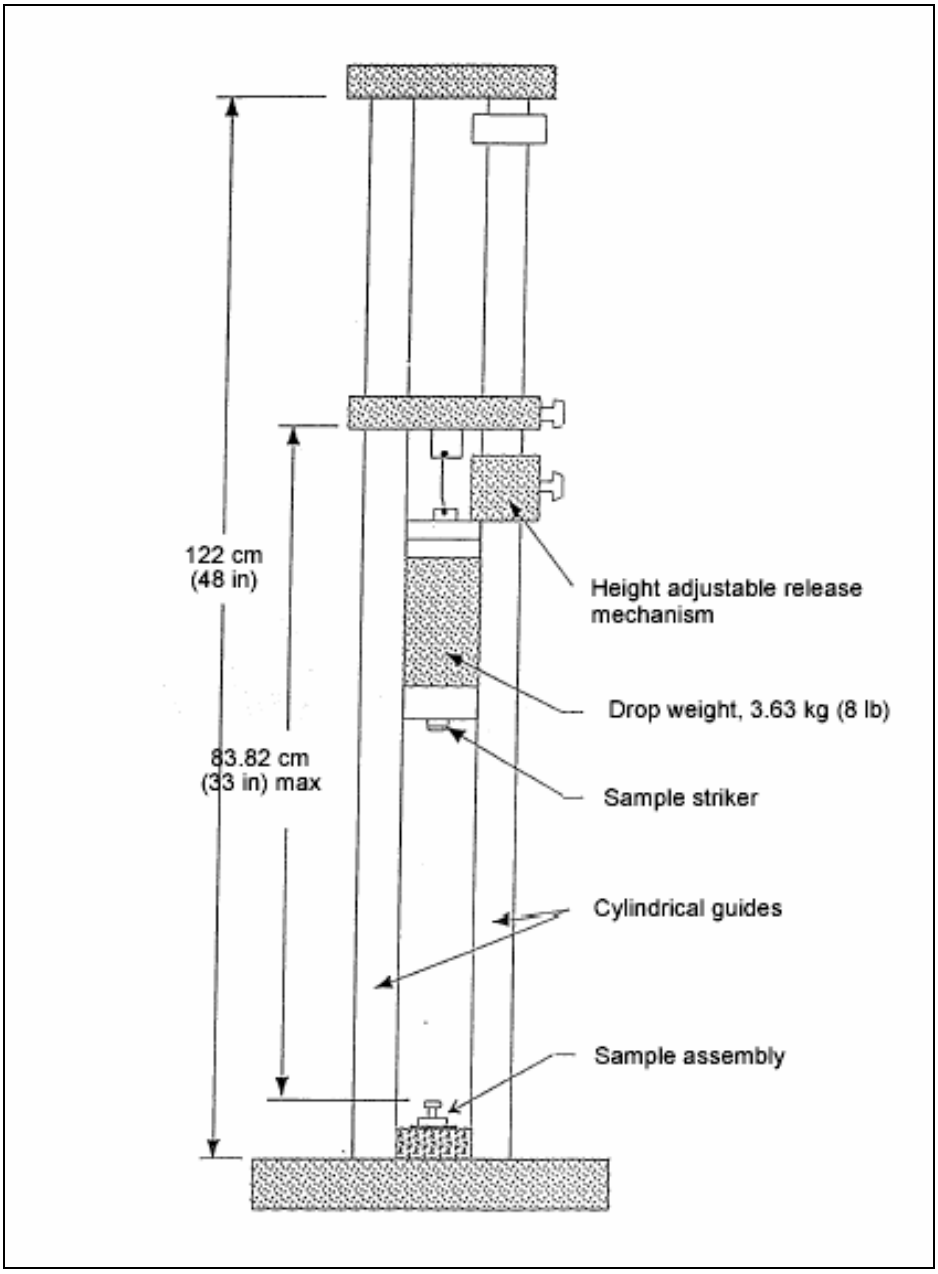

FIGURE 1.Impact Test (Laboratory Scale) - Bureau of Explosives Design

Top

TEST INFORMATION SHEET

1. TYPE OF EXPLOSIVE: High Explosives, Propellants, and Pyrotechnics

2. TEST TITLE: Impact Test - Lawrence Livermore Laboratory

a. Type of Test: Hazard Assessment/Sensitivity.

b. Description: A hollow drop weight of 5 kg is usually used and a 2.5 kg weight is also available. Half of the mass of the weight consists of loose lead shot. An electric hoist positions an electromagnet, which suspends the drop weight at any desired height up to 177 cm. A pair of rollers attached to the weight guides the fall of the weight. The rollers run in groves cut in the parallel vertical tracks. The test may be conducted with or without flint paper. In its absence, the explosive sample is placed directly on the anvil. The sample may or may not be pelletized before testing.

c. Information Requirements for Assessment: Impact sensitivity data on two reference comparison explosives tested on the same machine.

d. Typical Results:

Explosive	50% Point for 5 kg (cm) With Flint Paper	50% Point for 5 kg (cm) Without Flint Paper
PETN (powder)	11	20
Tetryl (powder)	24	30
RDX (pellet)	28	--
HMX (pellet)	29	39
TNT (pellet)	76	--

e. Repeatability and Reproducibility: Good on same machine.

3. NATIONAL REFERENCES:

a. Walker, G. R., Whitbread, E. G., and Hornig, D. C., ed. Manual of Sensitiveness Tests. Valcartier, Quebec, Canada: Canadian Armament Research and Development Establishment. Published for Tripartite Technical Cooperation Program (TTCP), Panel 0-2 (Explosives), Working Group on Sensitiveness, February 1966.

Top

TEST INFORMATION SHEET

1. TYPE OF EXPLOSIVE: High Explosives, Propellant, and Pyrotechnics

2. TEST TITLE: Impact Test - Hercules Radford AAP

   a. Type of Test: Hazard Assessment/Sensitivity.

   b. Description: Test samples are placed on the flat metal surface (typically 12.7 mm diameter) of an anvil. A metal impact hammer, with flat contact surface equal in size and shape to the anvil surface, is brought to rest on the propellant sample. A 2 kg weight is dropped on the hammer, and initiation is detected visually, audibly, or by other sensory means and by infrared analysis of decomposition products. The threshold initiation level is defined as 20 consecutive trials in which no initiation occurs at a drop height of one level below that level in which at least one initiation occurred in 20 trials. Strict calibration and sample preparation techniques are used to increase result repeatability. All samples are conditioned at fixed temperature and humidity prior to testing. Solid propellant samples are tested at 0.84 mm thickness. Gun propellant samples are tested lying on their long dimension, in a monolayer for smaller granules, and are also tested in ground form in a monolayer to simulate dust. Impact force and duration are measured for calibration purposes and the impact machine calibrated regularly to ensure consistent results. Hammer and anvil materials are changed for special tests.

   c. Information Requirements for Assessment: Impact sensitivity data on two reference comparison explosives tested on the same machine.

   d. Typical Results: Standard finished propellants are initiated by drop heights of 100-130 mm, depending on formulation and granule size. Sensitivity decreases when testing larger granules.

   e. Repeatability and Reproducibility: Strict calibration and sample preparation techniques have resulted in good test repeatability.

3. NATIONAL REFERENCES:

   a. "Chemical Rocket/Propellant Hazards", CPIA PUB No. 194, Vol. II, May 1970.

Top

TEST DISCRIPTION

1. TYPE OF TEST: Impact Sensitivity - Liquid Explosives (JANNAF Method)

2. PURPOSE: This test determines the sensitivity to a normal impact of explosives in liquid or solid form.

3. BACKGROUND: The American Society for Testing and Materials (ASTM) has adopted this test as a standard method for determining the impact sensitivity of liquid monopropellants. It has also been adapted for use in determination of the impact sensitivity of solids. Reference (a) is the ASTM standard method. It is identical in substance to the JANNAF method g, “Drop Weight Test,” Test Number 4, given in reference (b).

4. TEST ARRANGEMENT:

4.1 Liquid materials:

a. Sample Cup Assembly: The sample cup assembly is shown in Figure 1. It comprises a body, which surrounds the sample cup; a sample cup; an expendable o-ring; an expendable diaphragm, which covers the sample; a piston, which rests on the diaphragm; a ball, which is struck by the drop weight; and a cap to secure the parts of the assembly.
b. Sample size: The standard sample size is 0.03 ml. Tests in which the sample volume is varied (at constant cavity volume of 0.06 ml) show that the degree of filling affects the result.
c. Weight: The drop weight is an integral assembly weighting 2 kg ± 1 g. It is held suspended by an electromagnet.
d. Drop-weight Assembly: The drop-weight assembly consists of a base plate with four leveling screws; a column; two guide rods (one graduated); a body retainer; a release mechanism, adjustable to retain t he magnet; and a top plate. The maximum height for a drop is 50 cm.

4.2 Solid materials:

a. Sample holder: An adapter, shown in Figure 2, is available for handling solid materials in this test. It is based on an adaptation of a design by the Bureau of Mines. The assembly consists of a stainless steel body, a hardened steel anvil and plunger, a plunger guide and retaining ring, and a brass sample cup. The plunger tip diameter is 0.304 inches.
b. Sample size: The standard sample size for solids is 0.020 g.
c. Weight: The weight used for solids is a 1 kg weight. If no reaction is observed at the 50 cm height with a 1 kg weight, other weights are used to determine E_{50}.
d. Drop-weight assembly: The drop-weight assembly is the same as that used for liquids.

5. PROCEDURE:

5.1 For liquid materials:

a. The drop-weight is set at the desired height and secured in place with the safety latch.
b. Sample preparation: The O-ring is inserted into the bottom of the cavity in the sample cup,and a 0.03 mL sample of the material to be tested is injected into the bottom of the cavity. A diaphragm is slid across the surface of the cup so that it drops flat onto the O-ring. The piston is placed in the cup and the cup is inserted into the body. The ball is placed on top of the piston and secured in place by the cap, which is screwed onto the body and tightened with a torque wrench to 7 lb-in.
c. The body assembly is placed into the retainer on the stand. The weight is released by deenergizing the electromagnet.

d. The test result is recorded as positive or negative, the body disassembled and cleaned, the height selected for the next drop, and steps 5.1.a through 5.1.c are repeated for a minimum of 20 trials, using a Bruceton up-down method.

e. If ten (10) successive trials at the maximum height are negative, the test is discontinued and the result reported as negative.
f. If a trial at 2 cm is positive, the trial is repeated six (6) times. If any negative results occur, up-down method should be employed to determine the 50% point. If six positive results occur within ten (10) trials at the minimum height (2 cm), the testing is discontinued and the 50% point reported as less than 1 cm.

5.2 For solid materials:

a. The drop-weight is set at the desired height and secured in place with the safety latch.
b. For the first trial, the 1-kg weight is set at the maximum height of the apparatus (50 cm). Sample preparation: For granulated materials, the sample used is that portion which will pass through a No. 50 and be retained by a No. 100 U. S. Standard Sieve. For non-granular material, a disc may be cut from a sheet of proper thickness by pressing a brass sample cup onto a sheet of the material resting on a brass plate. Prepared sample should be kept desiccated until tested. A brass cup containing the sample is placed on the anvil, and the plunger tip is carefully inserted into the cup.
c. The Sample holder is placed on the Drop-Weight Tester and the weight is gently lowered onto the plunger to compact the sample and ensure contact between the parts of the apparatus. The weight is released by de-energizing the electromagnet. The test result is recorded as positive or negative.
d. If the first result (1 kg at 50 cm) is negative, the drop weight is increased to 6 kg, and steps 5.2. a through 5.2.c are repeated:
    i. If the results are negative for ten (10) trials, testing is stopped and the result reported as negative at 300 kg-cm.
    ii. If the result at 300 kg-cm is positive, the weight is decreased and increased successively by halves in a Bruceton up-down approach until a 50% point is bracketed. The minimum increment should be equal to approximately 5% of the total value.
e. If the first result 50 kg-cm is positive, the height is selected for the next drop, and steps 5.1.a through 5.1.c are repeated for a minimum of 20 trials, using a Bruceton up-down method.

6. <u>RESULTS AND DATA</u>:

6.1 The following information shall be reported for this test:

a. Sample weight
b. Method of endpoint detection, such as:
    i. Sound – Microphone/recorder Arrangement, Ear
    ii. Go/no Go determination methodology
    iii. Smell
    iv. Sight – Flash, Smoke, Etc.
    v. All or combination of above
c. Number of drops per test
d. Number of test replications
e. Method of data analysis
f. Experimental material result with standard deviation
g. Reference material result with standard deviation

6.2 Typical test data obtained on this apparatus: Not available.

7. SUPPLEMENTARY INFORMATION:

7.1 Results of this test have been found to be temperature-dependent. It is therefore very important to

U.S. 201.01.010 (Cont.)

7.2 A more detailed description of the test apparatus for solids testing may be obtained from reference (c)

8. NATIONAL REFERENCES:

a. ASTM Method D 2540-70, Standard Method for Drop-Weight Sensitivity of Liquid Monopropellants, American Society for Testing and Materials, Philadelphia, PA.

b. “Liquid Propellant Test Methods, Recommended by the Joint Army-Navy-Air Force Panel on Liquid Propellant Test Methods,” Chemical Propulsion Information Agency, Applied Physics Laboratory, the Johns Hopkins University, Silver Spring, MD.

c. Data Bulletin # 61770: Technoproducts Drop-Weight Tester Procedure for Testing Solids, Technoproducts, Inc., Saratoga California.

Top

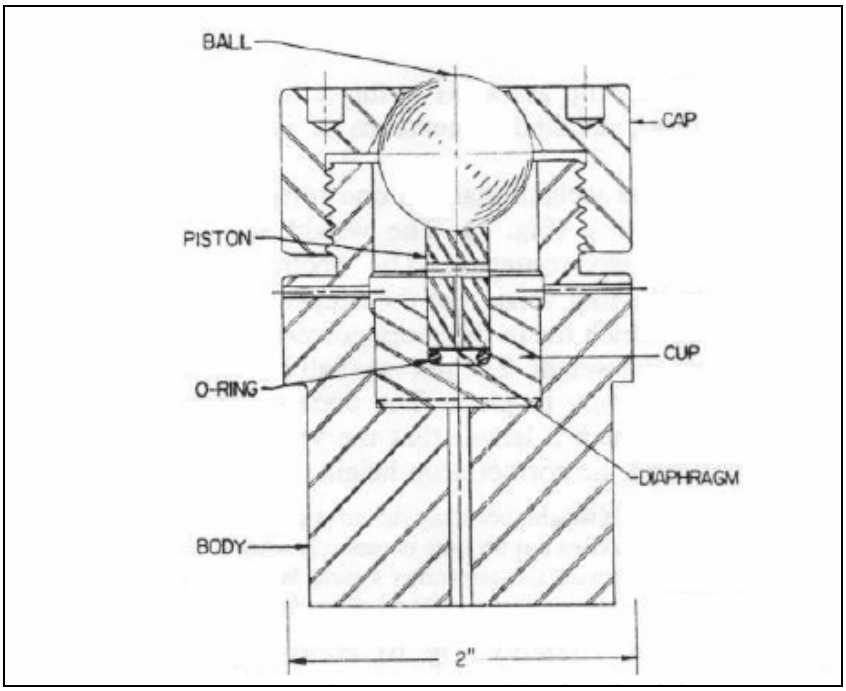

FIGURE1. Sample cup assembly for liquids

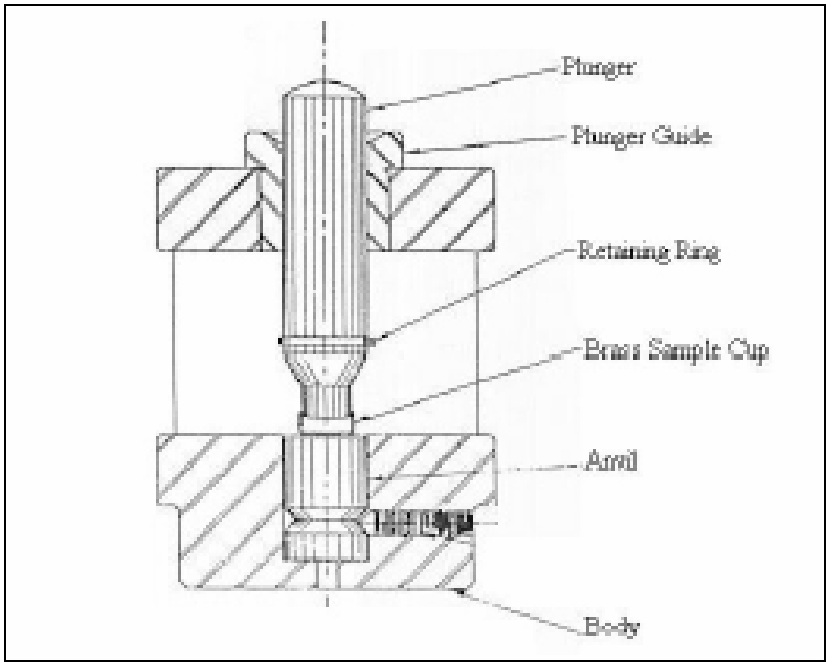

FIGURE 2. Sample cup assembly for solids

Top

TEST INFORMATION SHEET

1. TYPE OF EXPLOSIVE: High Explosives, Propellant, and Pyrotechnics

2. TEST TITLE: Pendulum Friction Test – Bureau of Mines

a. Type of Test: Hazard Assessment/Sensitivity.

b. Description: This test is performed with a weighted pendulum. The lower end is attached to a shoe with an interchangeable face of steel or fiber. The shoe is permitted to fall from a height of 1-1.5 meters and sweep back and forth, across a grooved steel friction anvil. The pendulum is adjusted to pass across the anvil 18 $\pm$ 1 times before coming to rest when no explosive is present. A 7-gram sample of explosive is spread in and about the grooved of the anvil and the shoe is allowed to sweep back and forth over the anvil until it comes to rest. The number of sweeps, cracklings, ignitions, and/or explosions is noted.

c. Information Requirements for Assessment: Friction sensitivity data on two reference comparison explosives tested on the same machine.

d. Typical Results:

Explosive	Wood-Fiber Shoe	Steel Shoe
Composition B	--	Passed
PETN	Passed	Failed
TNT	--	Passed
Tetryl	Passed	Failed
RDX	Passed	--

e. Repeatability and Reproducibility: Good

3. NATIONAL REFERENCES:

a. Walker, G. R., Whitbread, E. G., and Hornig, D. C., ed. Manual of Sensitiveness Tests. Valcartier, Quebec, Canada: Canadian Armament Research and Development Establishment. Published for Tripartite Technical Cooperation Program (TTCP), Panel 0-2 (Explosives), Working Group on Sensitiveness, February 1966.

Top

TEST INFORMATION SHEET

1. TYPE OF EXPLOSIVE: High Explosives, Propellant, and Pyrotechnics

2. TEST TITLE: Friction Pendulum Test - ARDEC Method

a. Type of Test: Hazard Assessment/Sensitivity.

b. Description: This test and apparatus is similar to AOP-7 Registry No. 201.02.001. It is based on the design originated by the Bureau of Mines. The bob of a weighted pendulum, a curved plate called a "shoe", is allowed to brush across the explosive sample at a low angle of incidence to the horizontal. The observations made and recorded are "explosion", "burning", "local crackling", and "no local crackling".

c. Information Requirements for Assessment: Friction sensitivity data on two reference comparison explosives tested on the same machine.

d. Typical Results:

Explosive	With Fiber Shoe	With Steel Shoe
PETN	Passed	Failed
RDX	Passed	Failed
Tetryl	Passed	Failed
Composition B	Passed	Passed
TNT	Passed	Passed
Explosive D	Passed	Passed

e. Repeatability and Reproducibility: Good

3. NATIONAL REFERENCES:

a. Walker, G. R., Whitbread, E. G., and Hornig, D. C., ed. Manual of Sensitiveness Tests. Valcartier, Quebec, Canada: Canadian Armament Research and Development Establishment. Published for Tripartite Technical Cooperation Program (TTCP), Panel 0-2 (Explosives), Working Group on Sensitiveness, February 1966.

Top

TEST INFORMATION SHEET

1. TYPE OF EXPLOSIVE: High Explosives, Propellant, and Pyrotechnics

2. TEST TITLE: Friction Sensitivity Test - NAWC (China Lake) Method

   a. Type of Test: Hazard Assessment/Sensitivity.

   b. Description: Same as described under AOP-7 Registry No. 201.02.001 (Friction Sensitiveness Test - Pendulum Friction Test- BoM Apparatus). The apparatus for this test is smaller scale than that of the BoM Apparatus. The bob of the pendulum is a fixed, metal wheel. In this instance, the rigid support for the explosive is called a "striker plate" rather than an "anvil". The NASW (NOTS) test procedure uses the statistical method of "up and down" testing common to many U.S. impact tests.

   c. Information Requirements for Assessment: Friction sensitivity data on two reference comparison explosives tested on the same machine.

   d. Typical Results: To be supplied on demand.

   e. Repeatability and Reproducibility: Acceptable.

3. NATIONAL REFERENCES:

   a. Walker, G. R., Whitbread, E. G., and Hornig, D. C., ed. Manual of Sensitiveness Tests. Valcartier, Quebec, Canada: Canadian Armament Research and Development Establishment. Published for Tripartite Technical Cooperation Program (TTCP), Panel 0-2 (Explosives), Working Group on Sensitiveness, February 1966.

NOTE: The NAWC no longer uses a pendulum friction machine. The NAWC uses, chiefly, an ABL friction tester but for certain materials, a BAM tester is also used.

Top

TEST DESCRIPTION

1. TYPE OF TEST: Roto Friction Test

2. PURPOSE: This test is used to determine the sensitivity of a substance when subjected to a sliding frictional force.

3. BACKGROUND: The test was developed at the Naval Surface Warfare Center, Crane Division as an improved test for measuring friction sensitivity. Reference (a) provides a detailed description of the test.

4. TEST ARRANGEMENT: The test equipment consists of the following components:

4.1 Sample holder: 1-inch tool steel cube (or similar shape with equivalent mass) with 0.25 ± 0.01-inchdiameter, 0.25 ± 0.01-inch-deep recess bored centered in one side. If the shape of the block permits, recesses may be placed on multiple sides to increase life of the block.

4.2 Friction rod: 0.25 ± 0.01-inch-diameter tool steel, powered by a drill press or similar mechanism capable of permitting vertical motion without affecting the rotational velocity, capable of turning the rod at a free-running speed of 4800 ± 100 RPM, and with sufficient power to maintain this speed to within 100 RPM when the rod is lowered onto the sample

4.3 Normal force weights: 25.0 ± 0.5 pounds of weight shall be added to the spindle, which lowers the friction rod. Any mechanism that is designed to automatically return the spindle to its upper position shall be disabled, but the ability to raise and lower the spindle shall remain. The weights shall be permanently mounted.

4.4 Torque measurement device: The applied force transmitted through the sample is made by measuring the torque applied to the sample holder. This measurement may be made by: (a) using a torque meter or other direct torque-measuring device, (b) a counter-weighted torque cam (reading in degrees deflection or scaled to read torque), (c) a load cell fitted to a torque arm, or (d) other similar methods. Observations may be made directly by the operator, by computer, by chart recorder or other suitable means. In the event that instrumented measurement and/or observation is used, a method for ensuring the accuracy of the readings shall be included. The torque measurement device shall include a dock for the sample holder, which will securely hold the sample holder and keep it aligned with the friction rod.

4.5 Timer: The time from contact between the sample and the friction rod and the end of test shall be measured with a minimum accuracy of 0.1 second. This measurement may be made using a stopwatch, electronic timer, computer, or other suitable means. A calibrated stopwatch or electronic timer shall be used as a reference to verify accuracy if an instrumented method is used

4.6 Optional components:

i. Robotic pick-and-place unit for sample insertion and removal.
ii. Pneumatic, electric or other remotely powered mechanism for raising the spindle, provided such mechanism does not interfere with spindle when fully lowered.

5. PROCEDURE:

5.1 Place a 30 ± 5 mg sample of the composition in the recess of the sample holder. Raise the spindle and place the sample holder in the dock on the torque measurement device. Activate the drive motor for the friction rod. Slowly lower the friction rod until it rests on the sample with full force of the normal force weights. Start the timer at the moment the rod contacts the surface of the sample. Observe and record the output of the torque measurement device until the sample reacts or 60 seconds has elapsed. Stop the

timer at that moment and raise the spindle. Stop the friction rod and remove the sample holder. The sample rod should be cleaned between runs to ensure a uniform surface is presented to each

specimen. If the torque measurement is not being recorded automatically, record the operator's observations immediately.

5.2 In the event that an initiation occurs within 2 seconds, the speed of the friction rod may be reduced. The use of an alternate speed, and the speed employed, shall be a part of the reported data and of any historical records.

6. RESULTS AND DATA:

6.1 The following information shall be reported for this test:

a. Dimensions of sample holder cavity and friction rod
b. Mass of normal force weights
c. Method of measuring torque
d. Method of obtaining time to reaction
e. Metric being reported (e.g., 50% initiation level or threshold initiation level (TIL))
f. Number of trials per test result
g. Number of replications of the test
h. Sensitivity, in terms of energy and level of reaction, of the candidate material
i. The energy value is calculated by multiplying the time to reaction by the torque observed. In the event that the torque reading is unstable during the test, the average torque should be used whenever possible. If it is not possible to obtain an average value then the reading at the moment of reaction shall be used. Integration of the area under a Time-vs-Force curve is preferable, and any such data plots obtained, or the means to readily reproduce them, should be kept as permanent historical data.

   (i) Reaction levels for “Fire”
      (a) Fire = Total or nearly total rapid consumption of sample, usually accompanied by an audible report
      (b) Spark = Partial consumption which throws off spark(s) and may or may not have some audible component
      (c) Burn = Slow consumption of some or all of sample with no audible report

   (ii) Reaction levels for “No-Fire”
      (a) Melt = Sample material melts but does not initiate; considered a physical state change only
      (b) Glaze = Surface of material glazes or hardens over; considered a physical state change only
      (c) None = No detectable initiation or change in physical state occurs
j. Sensitivity, in terms of energy and level of reaction, of reference standards

6.2 The results are reported as "No-Fire..." or "Fired at a torque of ___ lbf-foot and at___ seconds."

7. SUPPLEMENTARY INFORMATION: Class 7 PETN can be used as a reference standard material against which the results will be compared. A second reference material is required. It should be chosen so that the 50% point for the candidate explosive falls between the values for the two references.

8. NATIONAL REFERENCES:

a. Armour, Carl, and Smith, Lloyd A., The Invention of a New Type of Friction Sensitivity Apparatus, U. S. Naval Weapons Support Center, Crane, Indiana RDTR No. 60, 11 June 1965. U.S. National Technical Information Service, Springfield, VA, AD 617382.

Top

TEST DESCRIPTION

1. TYPE OF TEST: Friction Sensitivity - ABL Sliding Friction Test

2. PURPOSE: This test is used to determine the sensitivity of a substance when subjected to a sliding frictional force.

3. BACKGROUND:

4. TEST ARRANGEMENT

4.1 A schematic of the test apparatus is shown in figure 1. The wheel, whose position is fixed, and anvil are constructed of steel (Rockwell hardness “C” 58 ± 4) with a finish of 1.6 cm (63 cinches) with finish lines normal to the direction of motion. To conduct the test, force is applied hydraulically through the non-rotating wheel to the sample that rests on the anvil. A pendulum impacting on the edge of the anvil propels the anvil at a known velocity, perpendicular to the compressive force that is applied to the sample. Normally, the anvil slides one inch. A gauge measures the compressive force and the initial velocity is determined by calibration.

4.2 Test conditions will vary depending on the requirements. However, a temperature range of 25 ± 5 ºC is normally used. The relative humidity should range between 15 to 85% but should not exceed a level that could cause deliquescence of the test sample

4.3 Samples may either be tested as solid wafer, a bulk powder, or liquid. Sample weight is approximately 50 mg. Powders are sieved to pass through a #60 screen (≈ 0.25 mm) while solid samples are cut into 0.25 inch width x 1.0 inch length specimens which are placed along the sliding contact surface. A uniform sample thickness of approximately 0.03 inches is generally employed. The top and bottom surfaces of each sample should not contain any portion of the original cast-cure surface.

5. PROCEDURE:

5.1 As shown in figure 1, the wheel is lowered onto the substance and force is applied to the wheel. An initial force of 1000 lb is typically used although a range of 10 to 1800 lb is available. A pendulum is used to strike the anvil that is normally propelled at a velocity of 8 ft/sec. The anvil and sample are then slid across the wheel at which the test result is noted. The velocity of the anvil may be changed by altering the angle from which the pendulum is released.

5.2 A trial is considered positive if any of the following results are obtained; visible sparks, visible flame, audible explosion, loud crackling, or the detection of reaction products by a gas analyzer.

5.3 A twenty-shot sample is used to determine a 50% point by the Bruceton method using a 0.1 log pound ram force as the test variable. This is then compared to results obtained using a Type I or II, Class 5 RDX standard conforming to MIL-DTL-398.

6. RESULTS AND DATA:

6.1 The following information shall be reported for this test:

a. Finish on the anvil
b. Metric being reported (50% initiation level or threshold initiation level (TIL))
c. Criterion for determining go vs. no-go
d. Velocity of the anvil
e. Number of trials per test result

f. Number of replications of the test
g. Sensitivity, in terms of force applied to the wheel, of the candidate material
h. Sensitivity, in terms of force applied to the wheel, of reference standards.

6.2 A propellant or explosive with a 50% initiation level less than 250 pounds should be regarded as unusually sensitive to initiation by friction. A propellant or explosive that fires at 50 pounds should not be handled unless special safety precautions are taken.

7. SUPPLEMENTARY INFORMATION:

7.1 This test has also been adopted by the United Nations as a standardized procedure used for the hazard classification of explosive substances. References (b) and (c) provide specific pass-fail criteria for transportation.

7.2 Rather than a 50% point, in some cases the maximum force level at which 20 consecutive "No-Fires" occurs may be required. In this instance, the test preparation is identical but force levels are increased or decreased on a linear scale.

8. NATIONAL REFERENCES:

a. TB 700-2, Department of Defense Explosives Hazard Classification Procedures. Also known as NAVSEAINST 8020.8B, Air Force TO 11A-1-47, and DLAR 8220.1. Recommendations on the Transport of Dangerous Goods: Manual of Tests and Criteria, United Nations, New York.

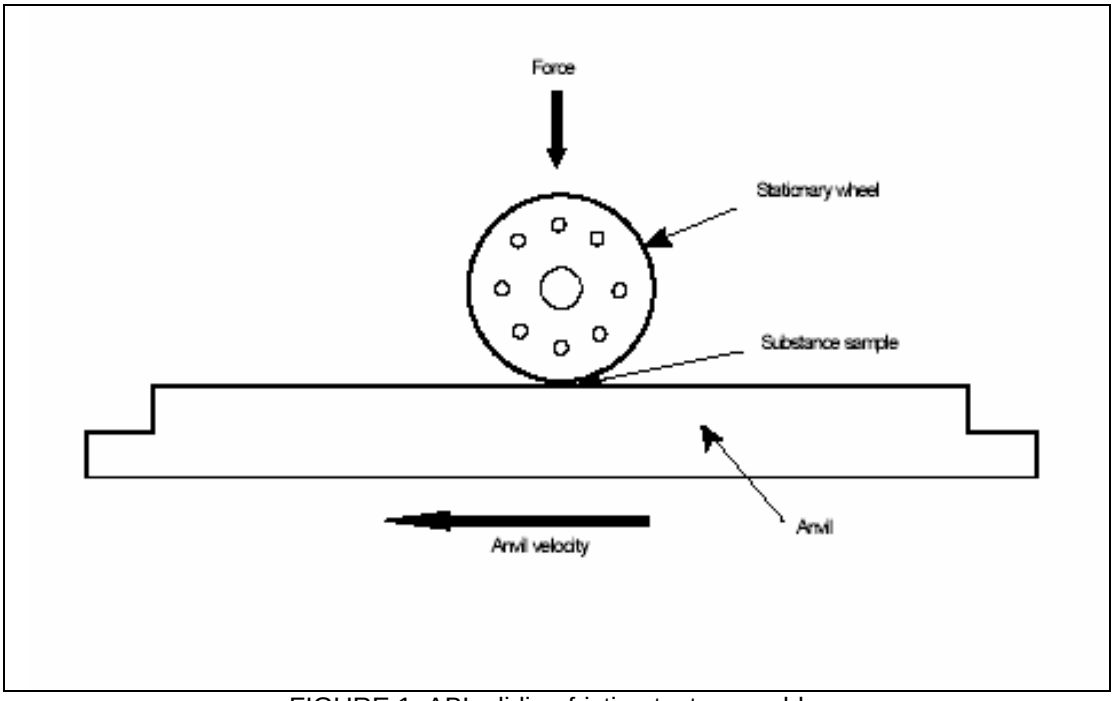

FIGURE 1. ABL sliding friction test assembly.

Top

TEST DESCRIPTION

1. TYPE OF TEST: Friction Sensitivity - BAM Friction Test

2. PURPOSE: This test is used to determine the sensitivity of a substance when subjected to a sliding frictional force.

3. BACKGROUND: The BAM (Bundesanstalt für Materialprufung) small friction tester, manufactured by the Julius Peters Company of Berlin, Germany, is used to measure the response of energetic materials to a friction stimulus generated between two roughened porcelain surfaces. Results are expressed numerically (as a 50% point in Newtons (N)) which allows for a relative sensitivity ranking. Liquids and pasty substances are generally not tested due to their lubricating tendencies and resulting low heat development that is usually insufficient to cause a reaction.

4. TEST ARRANGEMENT:

4.1 The BAM apparatus, as shown in Figure 1, consists of a reciprocating sample table which holds a porcelain sample plate and a lever arm to which is attached a porcelain pin. Weights of varying mass are attached at different distances on the lever arm to adjust the force applied between the porcelain pin and plate. The sample is placed between the pin and plate. When the motor is activated, the sample table is driven by an eccentric arm attached to a geared-down electric motor, which executes one revolution of the eccentric arm (one full cycle of reciprocating motion in the horizontal direction.

4.2 The porcelain pin is 15 mm long and 10 mm in diameter, with rounded ends of approximately 10 mm radius of curvature. The porcelain plates are 25-mm square and 5-mm thick. The total (peak-to-peak) displacement of the horizontal motion is 10 mm with the full cycle taking about one second to complete.

4.3 Weights supplied with the standard BAM apparatus provide a force on the pin of 0.5, 1, 2, 3, 4, 6, 8, 12, and 18 kg when suspended from the position nearest the pin. This can be increased by factors of 1.2, 1.4, 1.6, 1.8, and 2.0 by suspending the weights from successively more distant positions. Loads varying from 5 to 360 N can thus be realized.

4.4 Weights supplied with the small BAM apparatus provide a force on the pin of 0.01, 0.02, 0.05, 0.1, 0.2, 0.25, 0.3, 0.35, 0.4, 0.45 and 0.5 kg when suspended from the position nearest the pin. This can be increased by factors of 1.5 and 2.0 by suspending the weights from successively more distant positions. Loads varying from 0.1 to 10 N can thus be realized.

5. PROCEDURE:

5.1 Powdered samples are prepared by first sieving through a 0.5 mm mesh screen. Pressed, cast, and otherwise solid samples are crushed with a mortar and pestle prior to sieving. In some cases, shavings or thin machined disks of approximately 10 mm^3 are also used. The sample weight in all cases is approximately 50 mg.

5.2 In conducting the test, the porcelain plate is secured on the sample table with the surface striations perpendicular to the direction of motion. The test sample is placed on a portion of the porcelain plate and the pin placed in the pin holder and lowered so that it is in contact with the sample. A major portion of the test sample is set in front of the pin so that most of it will come under the pin after the plate is set in motion. After the appropriate weight has been placed in the desired position on the load arm, the apparatus is actuated and the test conducted.
5.3 A positive result is judged to have occurred if there is evidence of ignition (flash or smoke),

crackling, an explosion, or sparking. Negative results are indicated by a decomposition (slight black smear on the porcelain plate) and naturally, by no physical evidence of a reaction. A Bruceton method is then used with a sample size of 30 shots to determine a 50% point. This level is reported as a load in Newtons.

6. RESULTS AND DATA:

6.1 The following information shall be reported for this test:

a. Method of placing sample on the porcelain plate
b. Metric being reported (50% initiation level or threshold initiation level (TIL))
c. Criterion for determining go vs. no-go
d. Number of trials per test result
e. Number of replications of the test
f. Sensitivity, in terms of force applied to the load arm, of the candidate material
g. Sensitivity, in terms of force applied to the load arm, of reference standards.

6.2 Test results are compared to a Type I or II, Class 5 RDX standard conforming to MIL-DTL-398. Table I provides the results for several common explosives.

TABLE I. Friction Sensitivity Test Results.

Explosive	Initiation Level 50% Point (N)*	Threshold Initiation Level, N (10/10 No-Fires)
PETN, Class 4	56	60
Lead azide, Type I or II	10	
RDX, Type I or II, Class 1	96	115
RDX, 2.5µ	128	
HMX, Grade B, Class 1	80	108
TNT, Type I or II	> 360	112
Composition B, Type I	> 360	112 (8/8TIL)

* Data from AFRL/MNME

7. SUPPLEMENTARY INFORMATION:

7.1 This test has also been adopted by the United Nations as a standardized procedure, reference (b), for the hazard classification of explosive substances. Reference (b) provides specific pass-fail criteria for transportation.

7.2 Rather than a 50% point, in some cases the maximum force level at which 10 consecutive "No-Fires" occurs may be reported. Representative values of the threshold initiation limit (TIL) are given in Table I. Reference (c) states that the 50% point shall be reported.

7.3 Table II provides the friction load table for the various combinations of weights and notches available for the standard BAM friction apparatus. Table III provides the friction load table for various combinations of weights and notches available for the small BAM friction apparatus.

8. NATIONAL REFERENCES:

a. Harris, J., Friction Sensitivity of Primary Explosives, ARLCD-TR-82012, Picatinny Arsenal, Dover, NJ, September 1982.
b. Recommendations on the Transport of Dangerous Goods, Tests and Criteria, United Nations, New York.
c. NATO STANAG 4487, Friction Sensitivity Tests for the Qualification of Explosives for Military Use.

TABLE II. Standard BAM friction load table.

Weight No.	Notch	Load (N)	Weight No.	Notch	Load (N)
1	1	5	4	6	60
1	2	6	5	4	64
1	3	7	5	5	72
1	4	8	5	6	80
1	5	9	6	3	84
1	6	10	6	4	96
2	2	12	6	5	108
2	3	14	7	3	112
2	4	16	6	6	120
2	5	18	7	4	128
2	6	20	7	5	144
3	2	24	7	6	160
3	3	28	8	3	168
4	1	30	9	1	180
3	4	32	8	4	192
3	5	36	8	5	216
3	6	40	8	6	240
4	3	42	9	3	252
4	4	48	9	4	288
4	5	54	9	5	324
5	3	56	9	6	360

Weight No.	1	2	3	4	5	6	7	8	9
Mass (g)	213	493	1053	1614	2174	3293	4414	6655	10005

TABLE III. Small BAM friction load table.

Weight No.	Notch	Load (N)	Weight No.	Notch	Load (N)
1	1	0.1	8	1	3.5
1	2	0.15	6	2	3.75
1	3	0.2	5	3	4
2	3	0.3	7	2	4.5
2	3	0.4	6	3	5
3	1	0.5	8	2	5.25
3	2	0.75	7	3	6
3	3	1	10	2	6.75
4	2	1.5	8	3	7
4	3	2	9	3	8
6	1	2.5	10	3	9
5	2	3	11	3	10

Weight No.	1	2	3	4	5	6	7	8	9	10	11
Mass (g)	5.3	10	25	49.8	99.3	124.2	149.4	174.7	199.8	224.4	249.4

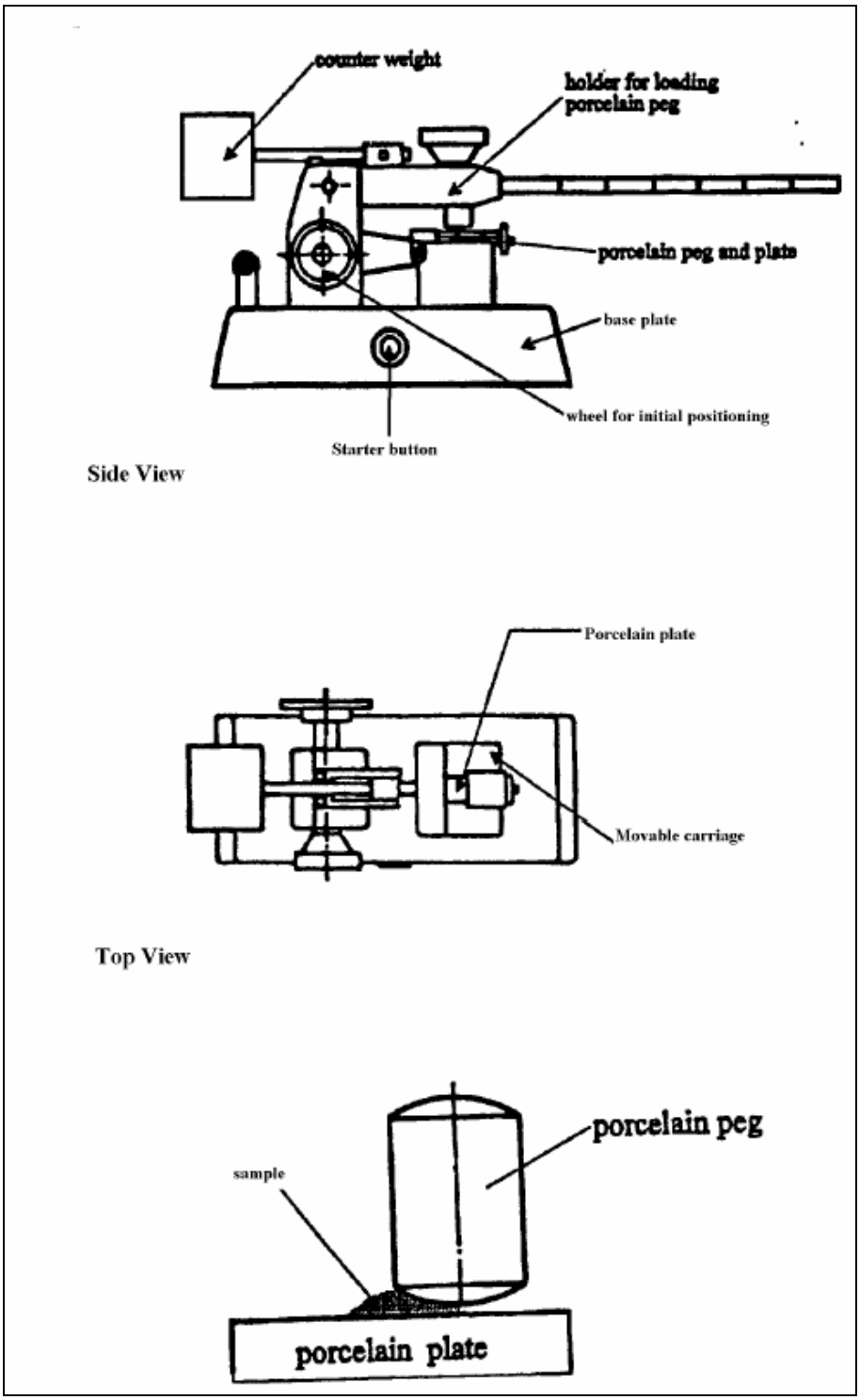

FIGURE 1. BAM friction test assembly. Top

TEST INFORMATION SHEET

1. TYPE OF EXPLOSIVE: High Explosives, Propellant, and Pyrotechnics

2. TEST TITLE: Friction Test - Hercules Radford AAP

   a. Type of Test: Hazard Assessment/Sensitivity.

   b. Description: A sample is placed on a flat metal anvil. A known force is applied hydraulically on a stationary metal wheel over the sample. A pendulum strikes the anvil, propelling it perpendicular to the force applied with the wheel. Initiation is detected audibly, visually or by other sensory means and by infrared analysis of decomposition gases. Samples are conditioned at fixed temperature and humidity before testing. Granular gun propellants are tested in a monolayer, typically ground to known size. Solid propellants are sliced to known thickness. Samples are placed under the wheel and along the wheel slide path. The standard anvil speed is 240 cm/sec (8 ft/sec). Anvil speed and material may be varied for specific test conditions. Threshold initiation level is defined as that force level at a given speed in which no initiation occurs in 20 consecutive trials, given at least one initiation in 20 trials at the next higher level.

   c. Information Requirements for Assessment: Friction sensitivity data on two reference comparison explosives tested on the same machine.

   d. Typical Results: Most standard finished propellants are initiated in the 68 - 110 kg (150-250 lb) force range at 240 cm/sec velocity.

   e. Repeatability and Reproducibility: Good

3. NATIONAL REFERENCES:

   a. "Chemical Rocket/Propellant Hazards", CPIA Publication No. 194, Vol. II, May 1970.

Top

TEST DESCRIPTION

1. TYPE OF TEST: Friction - Steel/Fiber Shoe

2. PURPOSE: This test is used to determine the sensitivity of a substance when subjected to a sliding frictional force.

3. BACKGROUND:

4. TEST ARRANGEMENT:

4.1 This pendulum friction device developed by the Bureau of Mines consists of a steel-swinging shoe, which is the bob of a pendulum. The "A" frame that supports the pendulum has two free bases, which can be raised or lowered simultaneously. This allows the friction between the shoe and anvil and, hence, the number of swings of the pendulum to be controlled.

4.2 The anvil is a plate of steel with an upper face consisting of a smooth, polished surface. Across the central portion of this surface, three parallel grooves have been cut to prevent the test sample, which has been spread on the anvil, from being brushed off the anvil by the movement of the shoe across it.

4.3 A steel shoe or one faced with red-hair fiber (called the "hard-fiber-faced shoe") may be used. This facing is fixed permanently to the face of the particular shoe to which it is attached.

4.4 An automatic tripper is used to allow the shoe to be dropped upon the anvil from any desired vertical height ranging from 50 to 200 cm. Height of drop normally used is 100 cm.

4.5 This test should be conducted in a temperature controlled room so that the temperature of the anvil and shoe is 70 ± 5 °F.

5. PROCEDURE:

5.1 Before beginning the trials with the test explosive, test the shoe using the empty anvil to ensure that the shoe is adjusted squarely with the anvil. The apparatus should be adjusted such that, when loaded with weights, the shoe shall swing across the face of the anvil 18 ± 1 times before coming to rest. Operating the turnbuckle that raises or lowers the “A” frame makes the adjustment.

5.2 With the device properly adjusted, spread 7.0 ± 0.1 grams of the test explosive in an even layer in and about the three grooves in the anvil. The shoe is then released and the test result is noted.

5.3 Twenty trials should be conducted using the steel shoe or fiber shoe. To pass, the test material using the steel shoe should not react in any of the twenty trials.

5.4 After the pendulum has stopped swinging, any explosive remaining is brushed off and the faces of the shoe and anvil are cleaned thoroughly with a suitable solvent. The shoe and the anvil are rubbed with Carborundum cloth to remove any adherent gritty matter or to smooth any roughness caused by the impact of the shoe on the soft steel anvil.

6. RESULTS AND DATA:

6.1 The following information shall be reported for this test:

a. Shoe type (steel or fiber)
b. Initial height of the pendulum
c. Metric being reported (usually threshold initiation level (TIL))
d. Criterion for determining go vs. no-go
e. Number of trials per test result
f. Number of replications of the test
g. Sensitivity, in terms of reaction observed, of the candidate material
h. Sensitivity, in terms of reaction observed, of reference standards.

6.2 Any type of explosion, burning, crackling, or scorching is considered a positive reaction.

6.3 Some typical results (reference (b)) are listed below:

Material	Steel Shoe	Fiber Shoe
Ammonium Perchlorate	Snaps	Unaffected
RDX	Explodes	Unaffected
Lead Azide	Explodes	N/A

7. SUPPLEMENTARY INFORMATION: None

8. NATIONAL REFERENCES:

a. Munroe, Charles E. and Tiffany, J.E., “Physical Testing of Explosives at the Bureau of Mines Explosives Experiment Station”, Bruceton, PA. U.S. Dept. of Commerce, Bureau of Mines, Bulletin 346, 1931. pp.78-84.

b. Engineering Design Handbook Explosive Series Properties of Explosives of Military Interest. U.S. Army Material Command, Washington, D.C. AMCP-706-177. January 1971, pp 26, 69, 182.

Top

TEST DESCRIPTION

1. TYPE OF TEST: Electrostatic Discharge (ARDEC (Picatinny Arsenal) Method)

2. PURPOSE: This test determines the energy threshold required to ignite explosives by electrostatic stimuli of varying intensities. Material response data obtained can then be used to characterize the probability of initiation due to electrostatic discharge (ESD) events.

3. BACKGROUND: This test is designed to screen candidate booster and main charge explosives for ESD sensitivity and not to rank the sensitivities of such materials.

4. TEST ARRANGEMENT:

4.1 The approaching electrode electrostatic apparatus consists of a charging circuit and an approaching electrode assembly. The approaching electrode assembly is a spring-operated device in which the upper electrode (needle) is lowered to a preset distance above the lower (cathode) electrode and immediately raised again to its initial position. Adjustments to the gap length are made by raising or lowering the lower electrode.

4.2 The upper portion of the lower electrode is a detachable solid cylinder of hardened steel, which serves as the sample holder. A nylon or polyethylene washer of 0.049 ± 0.014 inch thick by 0.13 to 0.16 inch inner diameter is fastened to the top of the steel cylinder (double adhesive tape may be used). The powder sample is placed in the center of the washer. Electrical insulating or Mylar tape approximately 0.075 inch thick is placed over the sample opening to confine the powder.

4.3 The charging circuit consists of a variable high-voltage power supply (25 kV), a capacitor-charging circuit, and an electrostatic voltmeter. The circuit is designed so that the appropriate low-inductance, high voltage capacitance, from 0.00025 to 0.02 µF, can be connected in the circuit. The storage capacitors are connected to the high-voltage source only when the approaching electrode is in the raised position. As soon as the approaching electrode starts to move downward, the high voltage contact is broken, thus disconnecting the high side of the capacitor from the charging source during discharge. The capacitor output is connected to the approaching electrode assembly.

5. PROCEDURE:

5.1 The electrostatic sensitivity test is divided into two parts. Part I is a screening test devised to distinguish between those materials which are relatively insensitive to electrostatic discharges from those which are relatively sensitive. Part II is a more intensive procedure used to rank or to determine the energy required to ignite the sensitive materials.

5.2 Part I:

5.2.1 The energy for this test is fixed at 0.25 joules. In this case, a 0.02 µF capacitor is connected to the discharge circuit and charged to 5.0 kV. The electrode spacing (gap) is set to 0.007 inch. Approximately 30 mg of the test sample is placed into the hole of the washer fastened to the top of the sample holder. In general, there should be sufficient sample to fill the washer. Electrical insulating or Mylar tape is then placed over the sample opening to confine the powder.

5.2.2 The charged upper electrode is released and moves downward to the preset gap distance. The needle will puncture the tape, penetrate the sample materials, discharge through the interstices of the

material, and rise again to its initial position. (The threshold voltage for gap breakdown will determine the distance where the needle will be above the base electrode when the discharge occurs.) A positive result is defined as a flash, spark, burn, or noise other than instrument noise.

5.2.3 If no reaction occurs, repeat the procedure until no reaction is obtained in 20 trials. The material is recorded as having passed the electrostatic test if there are no reactions in the 20 consecutive trials at the 0.25-joule level (0.02 microfarad capacitor charged to 5.0 kV). If a reaction is obtained at any point in the above-mentioned test, the test is discontinued and the procedure of 5.3 is used.

5.3 Part II:

5.3.1 The starting capacitance is usually the largest value and the starting voltage is 5.0 kV unless more efficient values based on experience are known. Repeat the procedure in Part I, 5.2 above. If a reaction is obtained, the energy is reduced by decreasing the potential on the capacitor in 500 V increments and the above procedure repeated. The voltage is reduced until the charging voltage is 2500 V and then the next lower capacitance is selected. When an energy level is reached where there is no reaction, repeat the procedure at that energy until no reaction is obtained in 20 consecutive trials. The results are reported as "no reaction at XX joules."

6. RESULTS AND DATA:

6.1 The following information shall be reported for this test:

a. the method of loading the sample into the test fixture
b. a description of the test fixture, including materials of construction and dimensions
c. a circuit diagram for the apparatus used.
d. criteria used to determine go/no-go
e. metric used for reporting sensitivity (e.g., 50% point, threshold initiation limit)
f. protocol used for conducting the test (Part I or Part II above)
g. number of trials per test series
h. number of replications of the test series
i. results for the candidate material
j. results for reference standards

6.2 Test results for the protocol performed according to Part I (Section 5.2) shall be recorded as “pass” or “fail” at 0.25 joules. No reaction in twenty out of twenty trials is a pass. Any reaction in 20 trials is a fail.

6.3 Test results for sensitive materials, tested with the protocol given in Part II (Section 5.3 above) are reported as the maximum energy level in joules that can be applied without causing a reaction in 20 consecutive trials. The energy, E, available for discharge may be determined by the relationship $E = CV^2/2$ where C = capacitance (μF) and V = applied voltage (kV). The total capacitance in the circuit is the combined values of the capacitor, wires, and electrode. The effective capacitance of the discharge circuit should be checked periodically to correct calculated energy levels for any significant changes in capacitance.

6.3.1 Values for three primary explosives are:

Primary Explosive	Energy for 0/20 (Millijoules)
Basic Lead Styphnate	<0.2
RD 1333 Lead Azide	4.7
Tetracene	28.0

7. SUPPLEMENTARY INFORMATION: Test results can also be reported as the 50 percent point in joules which causes a sample to fire 50 percent of the time. This is determined by the Bruceton "Up-and-Down" procedure. In this case, the voltage is raised or lowered in 500 V increments.

8. NATIONAL REFERENCES:

a. Kirshenbaum, M. S., Response of Primary Explosives to Gaseous Discharges in an Approved Approaching Electrode Electrostatic Sensitivity Apparatus, PATR-4955, Picatinny Arsenal, October 1976.

Top

TEST DESCRIPTION

1. TYPE OF TEST: Electrostatic Discharge (Naval Air Warfare Center (NAWC) Method)

2. PURPOSE: This test determines the energy threshold required to ignite explosives by electrostatic stimuli of varying intensities. Material response data obtained can then be used to characterize the probability of initiation due to electrostatic discharge (ESD) events.

3. BACKGROUND: The electrostatic test machine was designed and fabricated at China Lake, and was based on the research work undertaken under U.S. Bureau of Mines Sponsorship. The test is designed to simulate an electrostatically charged person or object discharging through a thin layer of sample to a grounded conductive surface.

4. TEST ARRANGEMENT:

4.1 The apparatus, shown in Figure 1, consists of a single capacitor, an electrode control assembly with a pointed steel electrode, and a sample holder where the explosive is loaded. After being placed in the sample chamber, the explosive is subjected to an electrostatic spark discharge, which generates a consistent energy level for each discharge capacitance selected. By varying the capacitor in the discharge circuit, the energy level of the spark discharge may be controlled over approximately three orders of magnitude. Both the energy level below which there is no decomposition reaction and the probability of initiation for a given energy level can be determined for the explosive sample.

4.2 The power supply is designed to provide a single, regulated output of 5 kilovolts direct current (kVdc) at 10 milliamperes to charge a 0.02 μF capacitor. The capacitor is wired to a capacitor selector switch, which allows the capacitor to discharge. The discharge apparatus consists of a needle electrode and a grounded sample post, which form a point-to-plane electrode geometry. The needle electrode is connected to a Teflon push rod, which allows movement of the electrode towards the sample holder post.

5. PROCEDURE:

5.1 Approximately 50 mg of the explosive sample should be placed in a thin layer in the sample holder. Solid samples should be cut to a minimum dimension of 0.625 inch square or 0.625 inch diameter and microtomed to a thickness of 0.033 ± 0.004 inch. Powder samples should be sieved to determine the particle size of the sample. Hygroscopic or granular materials should be dried in an oven at 120°F or vacuum desiccated to remove any moisture prior to testing.

5.2 The selected capacitor is charged to the selected voltage by means of the power supply. The test is begun at the 8.33-joule (0.02 μF) level. If results are negative, i.e., no reaction, the test is continued until 20 consecutive failures are reported. If the test sample has a positive result, i.e., flash, spark, burn, odor, or noise other than instrument noise, then testing should be performed at the next lower level until 20 consecutive failures are reported. The test is normally conducted at 5 kVdc at an ambient temperature of between +72 and +80°F, and a relative humidity not exceeding 40 percent. In conjunction with the test sample, a reference standard such as Class 5 RDX or PETN should be tested at the same time.

6. RESULTS AND DATA:

6.1 The following information shall be reported for this test:

a. a description of the test fixture, including materials of construction and dimensions
b. the method of loading the sample into the test fixture
c. a circuit diagram for the apparatus used.
d. the actual or nominal capacitance associated with the energy levels
e. specific procedure for conducting the test, including:
   i. the method for setting the needle position
   ii. the distance of the needle from the cathode when discharge occurs
f. criteria used to determine go/no-go
g. number of trials per test
h. number of test replications
i. sensitivity of the candidate explosive, in terms of the maximum energy level in joules that can be applied without causing a reaction in twenty consecutive trials.
j. sensitivity of reference explosives, as above
k. a summary of results of all other energy levels tested

6.2 Representative data for several explosives are given in Table I.

7. SUPPLEMENTARY INFORMATION: After the capacitor has been charged to the applied potential (5kV), the capacitor will hold that charge for a significant period of time provided that the unit is functioning normally and the relative humidity is low. In high humidity conditions, surface moisture on the wires and capacitors in the unit may produce sufficient surface currents to partially discharge the capacitors before the sample can be tested. The energy, E, available for discharge may be determined by the relationship $E = CV^2/2$ where C = capacitance (µF) and V = applied voltage (kV). The total capacitance in the circuit is the combined values of the capacitor, wires, and electrode. The effective capacitance of the discharge circuit should be checked periodically to correct calculated energy levels for any significant changes in capacitance. Changes could be caused by deterioration of the capacitors over time or changes in the configuration of the electrodes.

8. NATIONAL REFERENCES:

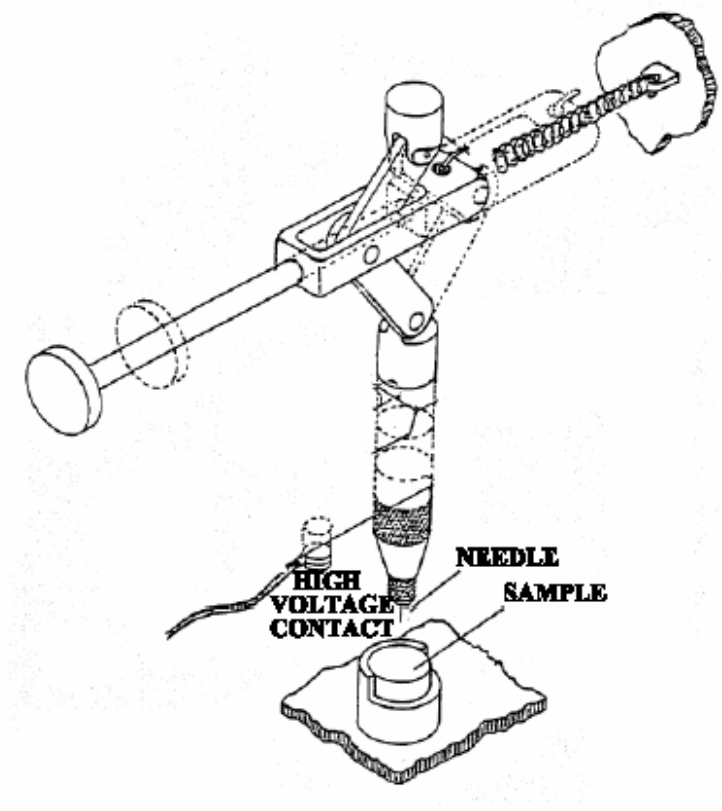

Figure 1. NAWC ESD Apparatus

Capacitance: 0.02 µF Voltage: 5000 V	
Explosive	Result
RDX, Class II	10/10 No Fires @ 0.25J
RDX, Class V	10/10 No Fires @ 0.25J
RDX Class I	10/10 No Fires @ 0.25J
PETN, Dupont Superfine (12 µm)	10/10 No Fires @ 0.25J
HMX, Class I	10/10 No Fires @ 0.25J
TNT	10/10 No Fires @ 0.25J
Tetryl, Dup404	10/10 No Fires @ 0.25J
CH-6	10/10 No Fires @ 0.25J
TATB	10/10 No Fires @ 0.25J

TABLE I. Results for several explosives tested by U.S. 201.03.002 method.

Top

TEST DESCRIPTION

1. TYPE OF TEST: Electrostatic Discharge (Naval Surface Warfare Center (NSWC) Method)

2. PURPOSE: This test determines the energy threshold required to ignite explosives by electrostatic stimuli of varying intensities. Material response data obtained can then be used to characterize the probability of initiation due to electrostatic discharge (ESD) events.

3. BACKGROUND: The test apparatus described herein is identical to the Model 150 ESD sensitivity tester developed by Hercules Aerospace Company.

4. TEST ARRANGEMENT:

4.1 The apparatus consists of a series of capacitors, an electrode control assembly with a pointed steel electrode, and a sample holder where the explosive is loaded. After being placed in the sample chamber, the explosive is subjected to an electrostatic spark discharge that generates a consistent energy level for each discharge capacitance selected. By varying the capacitance in the discharge circuit, the energy level of the spark discharge may be controlled over approximately three orders of magnitude. Both the energy level below which there is no decomposition reaction and the probability of initiation for a given energy level can be determined for the explosive sample.

4.2 The power supply is designed to provide a single, regulated output of 5 kilovolts direct current (kV dc) at 10 milliamperes to charge the capacitors. The capacitor bank consists of up to 12 capacitors which vary in capacitance from 0.0001 to 0.5 µF and are rated for 10 kV working voltage. Each of the capacitors is wired to a capacitor selector switch that allows only one of the capacitors to discharge at a time. The discharge apparatus consists of a needle electrode and a grounded sample post that form a point-to-plane electrode geometry. The needle electrode is connected to a Teflon push rod which allows movement of the electrode towards the sample holder post.

5. PROCEDURE:

5.1 Approximately 50 mg of the explosive sample should be placed in a thin layer in the sample holder. Solid samples should be cut to a minimum dimension of 0.625-inch square or 0.625-inch diameter and microtomed to a thickness of 0.033 ± 0.004 inch. Powder samples should be sieved to determine the particle size of the sample. Hygroscopic or granular materials should be dried in an oven at 120µF or vacuum desiccated to remove any moisture prior to testing.

5.2 The selected capacitor is charged to the selected voltage by means of the power supply. The test is begun at the 8.33 joule (0.5 µF) level. The needle is set a fixed distance from the cathode. If results are negative, i.e., no reaction, the test is continued until 20 consecutive no-gos are reported. If the test sample has a positive result, i.e., flash, spark, burn, odor, or noise other than instrument noise, then testing should be performed at the next lower level until 20 consecutive no-goes are reported. The test is normally conducted at 5 kV dc at an ambient temperature between +65 and +90°F, and a relative humidity not exceeding 40 percent. In conjunction with the test sample, a reference standard such as Class 5 RDX or PETN should be tested at the same time.

6. RESULTS AND DATA:

6.1 The following information shall be reported for this test:

a. Method of loading the sample into the test fixture
b. Description of the test fixture, including materials of construction and dimensions
c. Specific procedure for conducting the test, including the method for setting the position and the distance of the needle from the cathode when discharge occurs
d. Criteria used to determine go/no-go
e. Circuit diagram for the apparatus used
f. Actual or nominal capacitance associated with the energy levels tested
g. Maximum energy level (Threshold Initiation Level (TIL)) in joules that can be applied without causing a reaction in twenty consecutive trials.
h. Metric being reported (50% initiation level or threshold initiation level (TIL))
i. Number of trials per test result
j. Number of replications of the test
k. Method of data analysis (e.g., Bruceton)
l. Sensitivity, in terms of energy, of the candidate material
m. Sensitivity, in terms of energy, of reference standards
n. Summary of results of all other energy levels tested

6.2 After the capacitor has been charged to the applied potential (5kV), the capacitor will hold that charge for a significant period of time provided that the unit is functioning normally and the relative humidity is low. In high humidity conditions, surface moisture on the wires and capacitors in the unit may produce sufficient surface currents to partially discharge the capacitors before the sample can be tested. The energy, E, available for discharge may be determined by the relationship $E = CV^2/2$ where C = capacitance (µF) and V = applied voltage (kV). The total capacitance in the circuit is the combined values of the capacitor, wires, and electrode. The effective capacitance of the discharge circuit should be checked periodically to correct calculated energy levels for any significant changes in capacitance. Changes could be caused by deterioration of the capacitors over time or changes in the configuration of the electrodes. Table I provides actual capacitance and energy levels of the specific test apparatus located at the NSWC site. Table II presents typical test results when using the apparatus described herein.

7. SUPPLEMENTARY INFORMATION:

8. NATIONAL REFERENCES:

a. Operating Manual for Model 150 ESD Sensitivity Tester, Hercules Aerospace Company, Allegany Ballistics Laboratory, Rocket Center, West Virginia.

TABLE I. Energy Levels for Specific Capacitor Size

Nominal Capacitance (µF)	Actual Capacitance (µF)	Energy Level (joules) @ 5 kV
0.5	0.498	6.255
0.25	0.251	3.140
0.1	0.103	1.290
0.05	0.051	0.640
0.02	0.0195	0.240
0.01	0.0099	0.120
0.005	0.0057	0.070
0.002	0.0022	0.030
0.001	0.0014	0.017
0.0005	0.0009	0.011
0.0001	0.0005	0.006

TABLE II Typical Test Data

Test Sample	Threshold Level (joules)	50% Point (joules)
HMX, Class 1	0.165	NA
RDX, Class 1	0.095	0.162
TNT	0.172	NA
PETN	0.095	NA

Top

TEST DESCRIPTION

1. TYPE OF TEST: Electrostatic Discharge Sensitivity - Large Scale Test

2. PURPOSE: This test determines the energy threshold required to ignite explosive billets by electrostatic stimuli of varying intensities. This test differs significantly from other procedures in that it evaluates electrostatic discharge (ESD) effects on processed charges orders of magnitude larger than those normally tested in the milligram size. The effect of multiple ESD pulses is also examined. Material response data obtained can then be used to characterize the probability of initiation due to ESD events.

3. BACKGROUND: This test was developed in France to characterize the response of explosive charges to single and multiple ESD pulses. It has been incorporated in a NATO standardization agreement for energetic material qualification (see reference (a)).

4. TEST ARRANGEMENT:

4.1 The test setup consists of a high voltage power supply, a high efficiency capacitor (34.7 µF) with independent coupling, an explosive sample, negative and positive brass electrodes, and high voltage cables. The positive electrode is a 10 mm diameter by 210 mm long brass rod, tapered to a 60º conical shape (see Figure 3), with the end in contact with the test charge. The negative electrode is a brass disk 110 mm in diameter by 5 mm thick.

4.2 Explosive samples are tested in one of two ways:

4.2.1 Bare billets, 90 mm in diameter by 90 mm long, with one face painted with a conductive silver lacquer. Cast explosive samples should be processed as they normally would be prepared in production. Pressed samples should be tested at the nominal working density at which they are expected to be used in applications.

4.2.2 Granular or powder samples should be placed in a polymethylmethacrylate (PMMA) container with 90 mm I.D., 102 mm O.D., and a length of 125 mm. A polyvinylchloride cover plate with a center hole for the electrode is then glued on top of the container.

4.2.3 Figures 1 through 4 provide diagrams of the test setup, power supply, electrodes, and sample containers.

5. PROCEDURE: The explosive material is placed between a conical positive electrode and a negative plane electrode. The bare explosive sample or the one contained in the PMMA holder is subjected to a series of electrostatic discharges with a fixed intensity of 15.6 joules. This energy level is obtained by charging the selected capacitor to 30kV. After each discharge, the explosive material behavior is noted. Consecutive discharges are then repeated until an explosive reaction is observed or up to 30 discharges, whichever comes first. The test is then repeated in triplicate on two additional samples of the same energetic component.

6. RESULTS AND DATA:

6.1 The following information shall be reported for this test:

a. The method of loading the sample into the test fixture;
b. A description of the test fixture, including materials of construction and dimensions;
c. A circuit diagram for the apparatus used;
d. The protocol used for conducting the test;
e. The number of replications of the test series;
f. The results for the candidate material;
   i. The number of discharges performed;
   ii. The sample behavior (see below);
g. The results for reference standards;

6.2 Sample behavior is defined according to the following reaction levels:

a. No reaction.
b. Rising of the cover with flash.
c. Fragmentation of the explosive billet.
d. Combustion/burning.
e. Detonation.

6.3 If after 30 repeated discharges on all the three samples only results described 6.2a (no reaction) are observed, then the material is labeled insensitive to electrostatic discharge. For all other types of reactions as listed in 6.2b, 6.2c, 6.2d and 6.2e, the material is labeled sensitive to electrostatic discharge and explosive sample is judged to have failed the test. (See ref a.)

7. SUPPLEMENTARY INFORMATION:

8. NATIONAL REFERENCES:

a. NATO STANAG 4490, Explosives, Electrostatic Discharge Sensitivity Test(s), Large Scale Test.

Top

TEST INFORMATION SHEET

1. TYPE OF EXPLOSIVE: High Explosives, Propellant, and Pyrotechnics

2. TEST TITLE: Electrostatic Discharge Sensitivity -Hercules Radford AAP

   a. Type of Test: Hazard Assessment/Sensitivity.

   b. Description: The test sample is placed on a grounded metal plate. A needle, which is connected to a charged capacitor, is lowered toward the sample on the plate until discharge occurs. Initiation of the sample is detected visually, audibly, or by other sensory means and by infrared analysis of decomposition products. Threshold initiation level is defined as the level of energy at which no initiation occurs in 20 consecutive trials, with at least one initiation in 20 trials at the next higher energy level. The sample is distributed as a monolayer of dust or granules of known size for gun propellants and 0.76 mm thick for other solid propellant samples. Samples are conditioned before testing. Typical tests are in the 4000 to 5000 Volt level. Tests are performed at 70°F, 50% relative humidity.

   c. Information Requirements for Assessment: Data on the sensitivity to electrical stimuli.

   d. Typical Results: Most standard finished propellant granules are initiated by discharges of 1 to over 5 Joules depending on the composition and granule size of the propellant. Dusts are initiated by discharges of 0.2 to 1.5 Joules, depending on the particle size and composition.

   e. Repeatability and Reproducibility: Good.

3. NATIONAL REFERENCES:

   a. “Chemical Rocket/Propellant Hazards”, CPIA Publication No. 194, Vol. II, May 1970.

Top

TEST INFORMATION SHEET

1. TYPE OF EXPLOSIVE: Pyrotechnics

2. TEST TITLE: Electrostatic Discharge – Closed Cup

a. Type of Test: Hazard Assessment/Sensitivity.

b. Description: Capacitor discharges through 20-30 milligram samples contained in a closed cup. Voltages up to 5000 volts are utilized.

c. Information Requirements for Assessment: Data on the sensitivity to electrical stimuli.

d. Typical Results: Results are reported as "FIRE" or "NO FIRE". Typical examples of results are:

Explosive	Result
Mk 45 Illuminating Composition	NO FIRE (at 1.0 Joules)
Red Phosphorus (6% Linseed Oil)	NO FIRE (at 0.2 Joules)
RDX	FIRE (at 0.019 Joules [50%])

e Repeatability and Reproducibility: Results are repeatable within ± 10%.

3. NATIONAL REFERENCES:

a. Test Procedure for Electrostatic Sensitivity, WQEC TP 3403-47, 22 March 1976, Naval Weapons Support Center, Crane, Indiana.

b. Brown, R. W. et al., Sensitivity of Explosives to Initiation by Electrostatic Discharges, Bureau of Mines Report of Investigation, 5002, September 1953.

Top

TEST DESCRIPTION

1. TYPE OF TEST: Shock Sensitivity - Expanded Large Scale Gap Test (ELSGT)

2. PURPOSE: This test measures the sensitivity of an explosive exposed to an explosive induced shock. This procedure is applicable to explosives that have unconfined critical diameters less than 2.875 inches. If there is any question about whether the test explosive meets this criterion, the critical diameter should be determined before the Expanded Large Scale Gap Test is conducted.

3. BACKGROUND:

3.1 This test is a scaled version of the NOL Large Scale Gap Test (LSGT). It was developed to provide a means for evaluating the shock sensitivity of insensitive explosive compositions that could not be evaluated in the LSGT because of critical diameter constraints.

4. TEST ARRANGEMENT:

4.1 General description:

4.1.1 The Expanded Large Scale Gap Test (ELSGT) is based on the Large Scale Gap Test (LSGT) described in U.S. 201.04.002. The dimensions of the acceptor system of the ELSGT apparatus are twice the dimensions of the acceptor system of the LSGT apparatus. The dimensions of the donor system of the ELSGT are 1.875 times larger than the dimensions of the donor system of the LSGT system. The witness plate thickness is scaled by a factor of two.

4.1.2 A standard donor explosive provides an explosive shock pressure of uniform magnitude. The shock is transmitted to the explosive test sample (acceptor) through a barrier of inert material which functions as a well-calibrated acceptor. By varying the thickness of the barrier between the donor and the acceptor, the barrier length required to allow or prevent a detonation of the acceptor is determined. A mild steel (e.g., SAE 1015 - 1026) witness plate is used at the base of the acceptor to provide a clear indication of whether or not the acceptor detonated in the trial. By a series of trials, the thickness of the barrier (gap) material that permits 50% of the acceptor samples to detonate is determined. For a schematic of the test arrangement see figure 1.

4.2 Donor assembly: A Hercules J-2 blasting cap (or equivalent) is used to initiate the donor charge. The donor charge is composed of two stacked 50/50 pentolite pellets, pressed to a density of 1.56 ± 0.01 g/cm^3. Each pellet is 3.75 inches in diameter and 1.875 inches thick.

4.3 Gap assembly: The main gap components are cut from a 3.75-inch diameter cast polymethylmethacrylate (PMMA) rod stock having a density of 0.0078 lb/in^3 (1.185 g/cm^3). The gap size is prepared by stacking various component thicknesses of standard PMMA blocks. Standard thicknesses are: 4.0, 2.0, 1.0, 0.5, 0.25, 0.2, 0.1, .050, .025, and .010 inches. As required, circular layers of 0.010-inch thick cellulose acetate are used to adjust the gap to the desired thickness. The use of cellulose acetate as a substitute for PMMA has been determined to have a negligible effect on ELSGT results (see reference (a)).

4.4 Acceptor assembly: Acceptors are cast directly into the charge body or machined to a diameter that is small enough to enable them to slide into the cold-drawn, mild-steel tubes. If required, chilling the acceptor to permit a slip fit into the tubes is permissible. The tubes are fabricated from seamless tubing with the ends machined to ± 0.010 inch of the desired length. The tube has an inner and outer diameter of 2.88 inches and 3.75 inches, respectively, while the length is 11.00 inches.

4.5 Witness plate and air space: The dimensions of the cold-rolled, mild-steel witness plate are nominally 12.0 x 12.0 x 0.75 inch. The acceptor is air-spaced 0.125 inch from the witness plate in the test set-up.

5. PROCEDURE:

5.1 Twelve charges are usually required to establish a 50% gap thickness adequately (critical gap). The larger the critical gap, the more sensitive the test material. For an unknown material, the first test is conducted at zero gap. If no detonation occurs, two additional tests are performed at zero gap. If a detonation occurs, the next test is conducted at 50 cards; and thereafter the number of cards is doubled until a negative result, "no-go," is obtained. Subsequent tests are made by dividing in half the gap between the closest "go" and "no-go" until one positive and one negative result, differing by one card, can be obtained.

5.2 At firing, the detonation of the pentolite sends a shock through the gap and into the acceptor. If the transmitted shock initiates a reaction in the test material, the effect of that reaction is shown as damage to the witness plate. The plate is recovered after the shot and then evaluated.

5.3 Interpretation of the witness plate damage is similar to that used in the LSGT U.S. 201.04.002 method. In the LSGT test, a positive result or "go" is recorded when a neat hole is punched in the plate and a broken plate or one with a poor quality hole is considered a "no-go". When a detonation occurred in the ELSGT series used to establish the test method, the plates were broken into 2 to 7 pieces, usually into 4 or 5 unequal pieces (see reference (b)).

6. RESULTS AND DATA:

6.1 The following information shall be for this test:

a. description of the initiation train (detonator, booster (if any) and donor charge)
b. material used for steel tube
c. gap material used (PMMA, cellulose acetate, or a combination)
d. number of trials per test series
e. number of test series conducted
f. sensitivity of candidate explosive
   gap thickness in cards or inches for 50% probability of initiation
   pressure in the gap material at the end of the gap
g. sensitivity of reference explosives

6.2 The pressure in the gap material at the end of the gap is obtained from the calibration of the gap thickness for the donor system employed. Reference (c) gives a calibration for the ELSGT with a pentolite donor and PMMA gap.

6.3 The pressure at the end of the gap can be converted to a pressure in the acceptor explosive by the use of the shock Hugoniot relationship of the gap material and of the acceptor explosive.

6.4 Results for some common explosives are shown in Table I.

7. SUPPLEMENTARY INFORMATION:

7.1 It is recommended that acceptor charges having the poorest quality, such as those with the highest or lowest densities, the largest repressed section, or the most flaws, be fired first. Thus, the highest quality acceptor charges are available for firing toward the end of the test series where the greatest reproduction is required.

7.2 A comparison of the ELSGT and LSGT (U.S. 201.04.002) test results is discussed in reference (b).

8. NATIONAL REFERENCES:

a. Jaffe, I., Beauregard, R.L., and Amster, A.B., The Attenuation of Shock in Lucite, NAVORD 6876, May 1960.
b. Liddiard, T.P. and Price, D., The Expanded Large-Scale Gap Test, NSWC TR 86-32, March 1987.
c. Tasker, D.G. and Baker, R.N., Experimental Calibration of the NSWC Expanded Large Scale Gap Test, NSWC TR 92-54, January 1992.

Table I. Typical expanded large scale gap test results.

Explosive	Density (g/cm^3)	50% Point (Cards)	50% Point (kbar)
PBXN-109	1.64	405 to 456	12.0 to 14.7
Comp B	1.69	489	10.0
PBXW-126	1.79	164	58.1

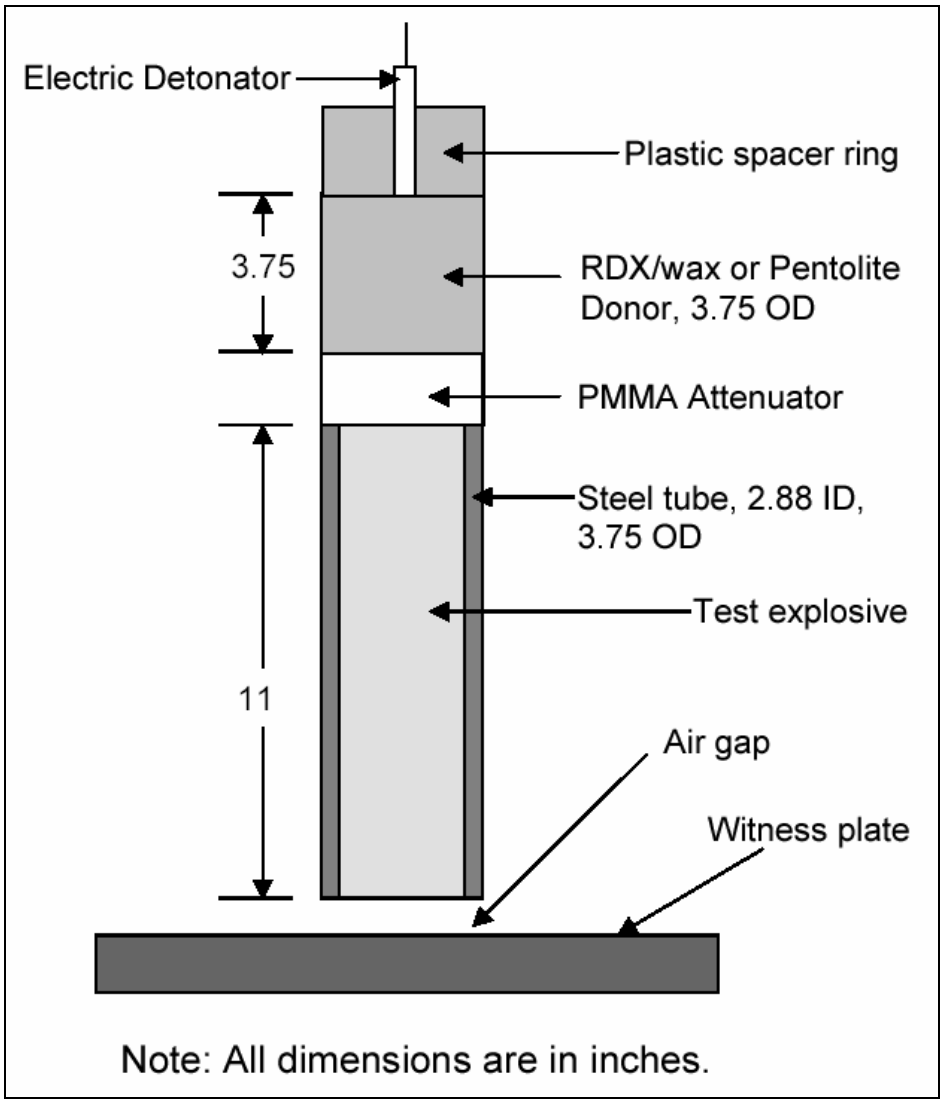

Figure 1. Typical Expanded Large Scale Gap Test Set-up

Top

TEST DESCRIPTION

1. TYPE OF TEST: Shock Sensitivity - (NOL Large Scale Gap Test (LSGT) Method)

2. PURPOSE: This procedure is applicable to explosives with an unconfined critical diameter of less than 1.4 inches. If there is any question as to whether the explosive to be tested meets this criterion, the critical diameter should be measured prior to conducting the LSGT.

3. BACKGROUND: This test has been used extensively for over thirty years to characterize the shock sensitivity of energetic compounds. To some extent, it is considered the “baseline” from which most other shock sensitivity tests have been developed.

4. TEST ARRANGEMENT:

4.1 A standard donor explosive provides an explosive shock pressure of uniform magnitude. The shock is transmitted to the explosive test sample (acceptor) through a barrier of inert material that functions as a well-calibrated attenuator. By varying the thickness of the barrier between the donor and the acceptor, the barrier length required to allow or prevent detonation of the acceptor is determined. A steel plate is used at the base of the acceptor to provide a clear indication of whether or not the acceptor detonates in the trial. By a series of trials, the thickness of barrier (gap) material that permits 50% of the acceptor samples to detonate is determined.

4.2 Specific details of the normal experimental assembly are shown in Figure 1. A detonator (#8 blasting cap or equivalent output) is used to initiate the standard donor that consists of two pressed 50/50 pentolite pellets with a density of 1.56 ± 0.01 g/cm^3. The approximate weight of each pellet is 80.3 g. The gap between the acceptor and donor is provided by a series of polymethylmethacrylate (PMMA) disks or cards with variable thickness. Standard attenuator sizes are 0.010, 0.050, 0.100, 0.250, 0.500, 0.750, 1.00, and 1.50 inches. The acceptor is cast, pressed, or machined to fit a cold-drawn, mild steel (SAE 1015 -1040) seamless tube with 0.22-inch-thick walls and a length 5.5 inches. The ends of the acceptor are machined or cut so that they are flat and flush with the ends of the tube. A mild steel (e.g., SAE 1015-1026) witness plate is placed 0.063 inches below the end of the acceptor.

4.3 To assemble the test, a cardboard spacer is placed around the end of the acceptor tube. The spacer, (measuring 1.875-inch inside diameter, 2.0-inch outside diameter, and 0.75 inch long) is used to center the acceptor in a cardboard container into which all the test components (donor, PMMA spacers, and wooden block used to hold the detonator) are placed. The cardboard container measures 2.0-inch inside diameter by 2.23-inch outside diameter by 8.5 inches long. The spacer serves to hold the acceptor firmly in the center of the larger container and also to provide a stand-off of the charge from the witness plate. The entire assembly is then placed on a 6-inch square by 0.375-inch-thick steel witness plate that is used to determine whether a detonation has occurred.

4.4 The test arrangement shown in Figure 1 is fully described in reference (a) and its calibration procedure is described in reference (b).

5. TEST PROCEDURE:

5.1 If possible, prior to testing, acceptor charges should be conditioned for a minimum of 8 hours at 75 ºF. A #8 blasting cap or equivalent output device is used to initiate the pentolite donor that transmits a shock wave through the PMMA gap and into the acceptor. If the transmitted shock initiates a reaction in the test material, the effect of that reaction is shown as damage to the witness plate. The plate is inspected after each shot with a positive result or "go" defined as a neat hole punched in the plate. An example of a negative result or "no-go" is a broken plate or one with a poor quality hole. Twelve charges are usually required to obtain the mean or 50% point.

5.2 For an unknown material, the first test is generally conducted at zero gap. If no detonation occurs, two additional tests are performed at zero gap. If a detonation occurs, the next test is conducted at 50 cards; and thereafter, the number of cards is doubled until a negative result, "no-go," is obtained. Subsequent tests are made by dividing in half the gap between the closest "go" and "no-go" until one positive and one negative result, differing by one card, can be obtained.

6. RESULTS AND DATA:

6.1 The following information shall be reported for this test:

a. description of the initiation train (detonator, booster (if any) and donor charge)
b. material used for steel tube
c. gap material used (PMMA, cellulose acetate, or a combination)
d. result for the candidate explosive for 50% detonation probability
   i. gap thickness in cards or inches
   ii. pressure at the end of the gap
e. dimensions of the witness plate

6.2 The pressure in the gap material at the end of the gap is obtained from the calibration of the gap thickness for the donor system employed. The calibration data for a pentolite donor and PMMA gap are given in Table I, which can be used to convert from a gap length in inches to a pressure in kilobars.

6.3 The pressure at the end of the gap can be converted to a pressure in the acceptor explosive by the use of the shock Hugoniot relationship of the gap material and of the acceptor explosive.

6.4 Results for some common explosives are shown in Table II. Reference (a) provides additional data on the results of shock sensitivity tests on a wide variety of compositions.

7. SUPPLEMENTARY INFORMATION:

7.1 The small stand-off (.063-inch gap) between the acceptor and the witness plate was introduced to prevent the witness plate from shattering and thereby facilitate interpretation of test results. The presence of the stand-off has no effect on the 50% point for Composition B although the punched witness plate from the standard test is somewhat more bent than that from the test run without the stand-off. PMMA was initially chosen as the gap material because (1) it is stable to changes in temperature and humidity, (2) it matches the impedance of solid non-porous test materials better than most other commonly used attenuators, and (3) it is much more convenient to use than molded wax. Additional advantage of PMMA, particularly over metal gaps, is that PMMA forms no damaging fragments. The latter situation complicates the estimation of the shock wave transmitted from the gap to the test material that has already been pre-compressed by the elastic wave. The disadvantage of PMMA is its viscoelastic behavior and the resultant uncertainty of its relaxation times. Hence, in the low pressure range there is still some uncertainty about whether a pressure is lower than the equilibrium value should be used.

7.2 Some laboratories prefer to use witness plates with larger length and width, e.g., 9-inch square, to reduce the likelihood of shattering the witness plate. This is an acceptable variation.

8. NATIONAL REFERENCES:

a. Price, D, Clairmont, A. R., Jr., and Erkman, J.O., The NOL Large-Scale Gap Test. III. Compilation of Unclassified Data and Supplementary Information for Interpretation of Results, NOLTR 74-40, March 1974.
b. Erkman, J.O., Edwards, D.J., Clairmont, A.R., Jr., and Price, D., Calibration of the NOLLarge-Scale Gap Test; Hugonoit Data for Polymethyl Methacrylate, NOLTR 73-15, April 1973.

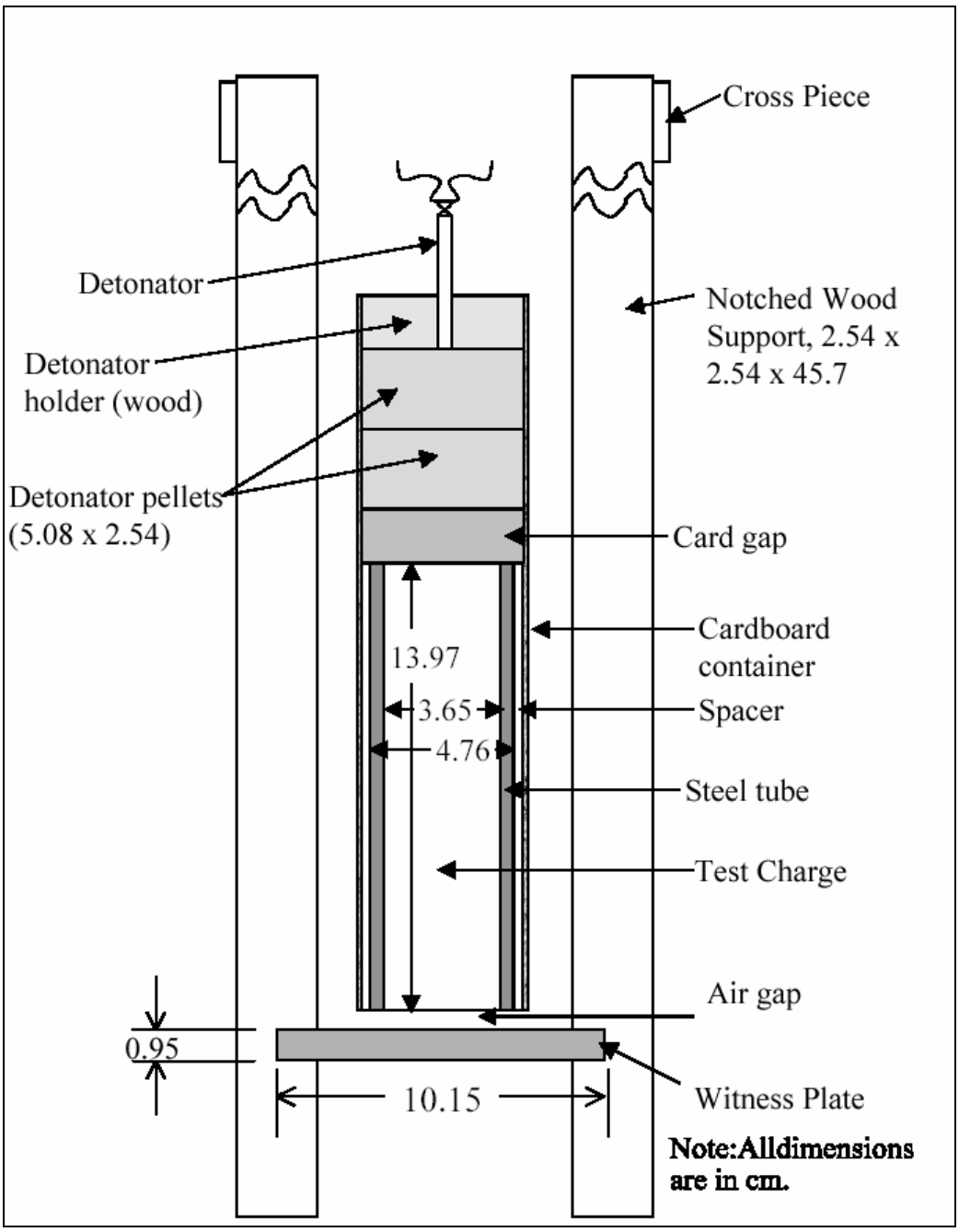

FIGURE 1. Cross-section of large-scale gap test assembly.

TABLE I. NOL large scale gap test calibration data.

Calibration of NOL Large Gap Test for Lot 718 Pentolite.
Number of cards in gap is sum of a number in first row and a number in the first column. One card is 0.01 inch; pressure in kilobars.

	1	2	3	4	5	6	7	8	9	10
0	213.1	202.5	192.9	184.2	176.3	169.2	162.7	156.8	151.4	146.6
10	142.0	137.9	134.1	130.6	127.3	124.3	121.6	119.0	116.5	114.4
20	112.3	110.4	108.5	106.8	106.2	103.7	102.2	100.9	99.6	98.3
30	97.2	96.0	95.0	93.9	92.9	92.0	91.1	90.2	89.3	88.5
40	87.7	86.9	86.2	85.4	84.7	84.0	83.3	82.6	82.0	81.3
50	80.7	80.1	79.5	78.0	78.3	77.7	77.1	76.6	76.0	75.5
60	74.9	74.4	73.9	73.3	72.8	72.3	71.8	71.3	70.8	70.3
70	69.8	69.3	68.9	68.4	67.9	67.5	67.0	66.6	66.1	65.7
80	65.2	64.8	64.3	63.9	63.5	63.1	62.6	62.2	61.8	61.4
90	61.0	60.6	60.2	59.8	59.4	59.0	58.6	58.2	57.8	57.4
100	57.1	56.7	56.3	55.9	55.6	55.2	54.9	54.5	54.1	53.8
110	53.4	53.1	52.7	52.4	52.1	51.7	51.4	51.0	50.7	50.4
120	50.1	49.7	49.4	49.1	48.8	48.5	48.2	47.8	47.5	47.2
130	46.9	46.6	46.3	46.0	45.7	45.4	45.2	44.9	44.6	44.3
140	44.0	43.7	43.4	42.8	42.2	41.6	41.0	40.5	39.9	39.4
150	38.9	38.3	37.8	37.3	36.8	36.3	35.8	35.4	34.9	34.4
160	34.0	33.6	33.1	32.7	32.3	31.8	31.4	31.0	30.6	30.2
170	29.9	29.5	29.1	28.7	28.4	28.0	27.7	27.3	27.0	26.7
180	26.3	26.0	25.7	25.4	25.1	24.8	24.5	24.2	23.9	23.6
190	23.3	23.0	22.8	22.5	22.2	22.0	21.7	21.5	21.2	21.0
200	20.7	20.5	20.3	20.1	19.8	19.6	19.4	19.2	19.0	18.8
210	18.6	18.4	18.2	18.1	17.9	17.7	17.5	17.4	17.2	17.0
220	16.9	16.7	16.5	16.4	16.2	16.1	15.9	15.8	15.6	15.5
230	15.3	15.2	15.1	14.9	14.8	14.7	14.5	14.4	14.3	14.1
240	14.0	13.9	13.8	13.7	13.5	13.4	13.3	13.2	13.1	13.0
250	12.9	12.7	12.6	12.5	12.4	12.3	12.2	12.1	12.0	11.9
260	11.8	11.7	11.6	11.5	11.4	11.3	11.3	11.3	11.1	11.0
270	10.9	10.8	10.7	10.6	10.6	10.5	10.4	10.3	10.2	10.2
280	10.1	10.0	9.9	9.8	9.8	8.7	9.6	9.5	9.5	9.4
290	9.3	9.3	9.2	9.1	9.1	9.0	8.9	8.9	8.8	8.7
300	8.7	8.6	8.6	8.5	8.4	8.4	8.3	8.3	8.2	8.1
310	8.1	8.0	8.0	7.9	7.9	7.8	7.8	7.7	7.7	7.6
320	7.6	7.5	7.5	7.4	7.4	7.3	7.3	7.2	7.2	7.1
330	7.1	7.0	7.0	7.0	6.9	6.9	6.8	6.8	6.7	6.7
340	6.7	6.6	6.6	6.6	6.5	6.5	6.4	6.4	6.4	6.3
350	6.3	6.3	6.2	6.2	6.2	6.1	6.1	6.1	6.0	6.0
360	6.0	5.9	5.9	5.9	5.8	5.8	5.8	5.8	5.7	5.7
370	5.7	5.6	5.6	5.6	5.6	5.5	5.5	5.5	5.5	5.4
380	5.4	5.4	5.4	5.3	5.3	5.3	5.3	5.2	5.2	5.2
390	5.2	5.1	5.1	5.1	5.1	5.1	5.0	5.0	5.0	5.0
400	5.0									

Note: Results are nominal for 0 to 39 cards.

TABLE II. NOL Large-Scale Gap Test Results.

Explosive	Density (g/cm^3)	% TMD	50% Point Number of Cards	50% Point Pressure* (kbar)
CH-6	1.70	95.5	267	11.0
Comp A-3	1.61	96.2	242	13.8
Comp B (Cast)	1.69 – 1.70	98.5 – 98.7	201 – 220	16.9 – 20.5
Comp C-4	1.56	98.4	192	22.8
H-6 (Cast)	1.75	97.6	197	21.5
LX-14	1.80	97.3	199	21.0
NQ	1.61	90.6	47	82.6
Octol 85/15	1.81	97.7	236	14.5
PBXN-7	1.79	95.0	217	17.4
PBXN-9	1.73	98.1	166 – 201	20.5 – 31.4
Pentolite 50/50 (Cast)	1.64	95.9	301	8.6
RDX	1.64	91.0	323	7.4
TATB	1.82	94.2	78	66.1
Tetryl	1.64	94.9	238	14.3
TNT (Cast)	1.58 – 1.61	95.7 – 98.1	108 - 198	21.2 – 54.1

* In the gap material

Top

TEST DESCRIPTION

1. TYPE OF TEST: Shock Sensitivity - (NOL Small Scale Gap Test (SSGT) Method)

2. PURPOSE: This test measures the sensitivity to detonation of an explosive exposed to an explosive induced shock. This procedure is applicable to explosives with a critical diameter of less than 0.2 inch.

3. BACKGROUND:

3.1 The present small-scale gap test (SSGT) has evolved through several improvements. The original test used dextrinated lead azide as the donor explosive, an air gap as the attenuator, and "complete shatter" of a witness plate as the go/no-go criterion. The donor output was too small, the gap spacing was difficult to maintain, and the method of determining the result was ambiguous. In 1961, the test was redesigned to use an RDX donor and polymethylmethacrylate (PMMA) attenuator. In the original RDX donor, a 0.1 inch gap was left at the top for insertion of the detonator. Later in 1973, the donor was modified such that the RDX was pressed and then cut off flush with the top of the containing cylinder. Tests showed that this change had no significant effect on the donor output

3.2 A standard donor explosive system provides a small diameter explosive shock pressure of uniform magnitude. The shock is transmitted to the explosive test sample (acceptor) through a barrier of inert material that functions as a well-calibrated attenuator. By varying the thickness of the barrier between the donor and the acceptor, the barrier thickness required to allow or prevent detonation of the acceptor is determined. A steel dent block is placed at the base of the acceptor to provide an indication of whether or not the acceptor detonates in the trial. By a series of trials, the thickness of barrier (gap) material that permits 50% of the acceptor samples to detonate is determined.

4. TEST ARRANGEMENT:

4.1 Specific details of the experimental assembly are shown in Figure 1. The donor charge assembly consists of a brass cylinder 1.50 inches long, 1.00-inch outside diameter and 0.20-inch inside diameter, filled with Type II, Class 2 RDX, conforming to MIL-DTL-398, in eight increments. Seven increments of approximately 200 mg are pressed at 10,000 pounds per square inch (psi) to a density of 1.56 ± 0.03 g/cm^3.The eighth increment or top-off weight of RDX is pressed to be flush with the top of the donor charge.

4.2 The eighth increment is also pressed at 10,000 psi. The donor charge is initiated by a No. 6 electric detonator (or equivalent output) positioned at one end in a plastic holder. The attenuator (gap) consists of PMMA disks, 1.00 inch in diameter, of varied thickness. The test explosive (acceptor) is pressed or extended into a brass cylinder identical to that containing the donor charge. The steel dent block is a disk, 3.00 inches in diameter and 1.50 inches thick.

4.3 For assembly, the donor, attenuator and acceptor are secured together with a peripheral wrap of masking tape. Other pieces of the tape are bridged over the whole assembly to prevent motion of the detonator and to keep the components aligned on the dent block.

5. PROCEDURE:

5.1 At firing, the detonation of the RDX donor charge sends a shock through the gap into the acceptor. If the transmitted shock initiates a reaction in the test material, the effect of that reaction is shown as damage to the dent block, which is recovered after the shot. The criterion for a positive result or "go" depends on the damage potential of the explosive under the test. A dent more than half the depth of the average dent produced by the test explosive, fired with no gap, is regarded as a "go". A smaller dent is a

negative or "no-go". Dent depths are measured as the distance below the undisturbed metal behind the ring upset around the dent.

5.2 Usually, 25 charges are prepared for one shock sensitivity determination and assigned to the firing sequence in random order. First, two charges are fired with zero gap to determine a provisional dent threshold. Then 20 charges are fired in a Bruceton stair-step plan. If a shot is a "go", the next shot is fired with a thicker attenuator. If it is a "no-go", the next step is fired with a thinner attenuator. The remaining three are reserved in case of mistakes during the 20-shot run. If not required as replacements, they are also fired with zero gap.

5.3 Data are treated and results are given in gap reducing units, decibangs (dBg), defined as follows:

$$Y = 30 - 10 \log X$$

where Y is the shock strength in dBg and X is the PMMA gap in mils (0.001 in). The step size for the Bruceton sequence is 0.125 dBg. Some typical values for dBg vs. gap are listed in table I. Data are reduced by the "maximum likelihood" method described in reference (e) and briefly outlined in paragraph 7 below. This method uses actual barrier thicknesses, measured with a micrometer and converted to dBg, for each shot rather than the nominal dBg value of the corresponding level. This is an important improvement to the precision of the sensitivity measurement because the practical tolerances in the PMMA spacer thicknesses is about ± 0.05 dBg.

5.4 Acceptors are filled with the explosive under the test in eight equal increments pressed at the same pressure. The increment weight is selected so that the eighth increment partially fits into the cylindrical container. The excess is cut off flush with the end of the container. The container is weighed before and after filling, and the acceptor charge density is calculated to three decimal places.

5.5 When the SSGT is performed as part of the qualification of a pressed booster explosive, the acceptor charges are loaded at 16,000 ± 1,000 psi. In this case, 20 shots are fired at the 3.5 dBg level, and the explosive passes the test if no charge produces a dent greater than 0.002 inches deep.

5.6 When the SSGT is conducted to evaluate the shock sensitivity of a pressed granular explosive composition, test sequences are performed for each of a number of acceptor densities. A typical set would be the densities produced by pressing pressures of 4, 8, 16, 32, and 64 psi ($x10^3$), respectively.

6. <u>RESULTS AND DATA</u>:

6.1 The following information shall be reported for this test:

a. description of the initiation train (detonator, booster (if any) and donor charge)
b. pressure at which the sample pellets were pressed.
c. number of trials per test series
d. number of test series conducted
e. sensitivity of the candidate explosive
f. sensitive of reference explosives

6.2 Results are reported in terms of decibangs (dBg) required to produce 50% detonation probability. Table I shows dBg vs. gap thickness. A graph of this data is presented in Figure 2.

6.3 Results for some common explosives are shown in Table II. Reference (d) lists additional data on the results of the SSGT for several typical explosives over a range of pressed densities.

7. SUPPLEMENTARY INFORMATION:

7.1 A calibration of the shock wave pressure transmitted by various PMMA gap thicknesses is reported in reference (d). The results are summarized in the following equation:

$$\log P = 0.14\,Y + 0.5232$$

where P is the shock pressure in kbar, and Y is the donor/attenuator value in dBg. This relationship holds in the range of 2 through 10 dBg. Values of the shock sensitivity (50% point) determined by the SSGT correlate well with those determined by the large-scale gap test (LSGT) at charge densities below 90% TMD. At lower porosities, the SSGT gives lower sensitivities and some reversals when comparing different explosive compositions.

8. NATIONAL REFERENCES:

a. Walker, G. R., Whitbread, E. G., and Hornig, D. C., ed. Manual of Sensitiveness Tests, Valcartier, Quebec, Canada: Canadian Armament Research and Development Establishment. Published for Tripartite Technical Cooperation Program (TTCP), Panel 0-2 (Explosive), Working Group on Sensitiveness, February 1966, pp. 144-151.
b. Ayres, J. N., Standardization of the Small Scale Gap Test Used to Measure the Sensitivity of Explosives, NAVWEPS Report 7342, 16 January 1961, Naval Surface Warfare Center, White Oak, MD 20903-5000.
c. Price, D. and Liddiard, T. P. Jr., The Small-Scale Gap Test: Calibration and Comparison with the Large Scale Gap Test, NOLTR 66-87, 7 July 1966, Naval Surface Warfare Center, White Oak, MD 20903-5000.
d. Ayres, J. N., Montesi, L. J., and Bauer, R. J., Small-Scale Gap Test (SSGT) Data Compilation:1959-1972: Volume I, Unclassified Explosives, NOLTR 73-132, 26 October 1973, Naval Surface Warfare Center, White Oak, MD 20903-5000.
e. Hampton, L. D. and Blum, G. D., Maximum Likelihood Logistic Analysis of Scattered Go/No-Go (Quantal) Data, NOLTR 64-238, 26 August 1965, Naval Surface Warfare Center, White Oak, MD 20903-5000.

TABLE I. dBg vs. gap thickness.

dBg	Gap Thickness (in)
2.0	0.6310
2.5	0.5623
3.0	0.5012
3.5	0.4467
4.0	0.3981
4.5	0.3548
5.0	0.3162
5.5	0.2518
6.0	0.2519
6.5	0.2239
7.0	0.1995

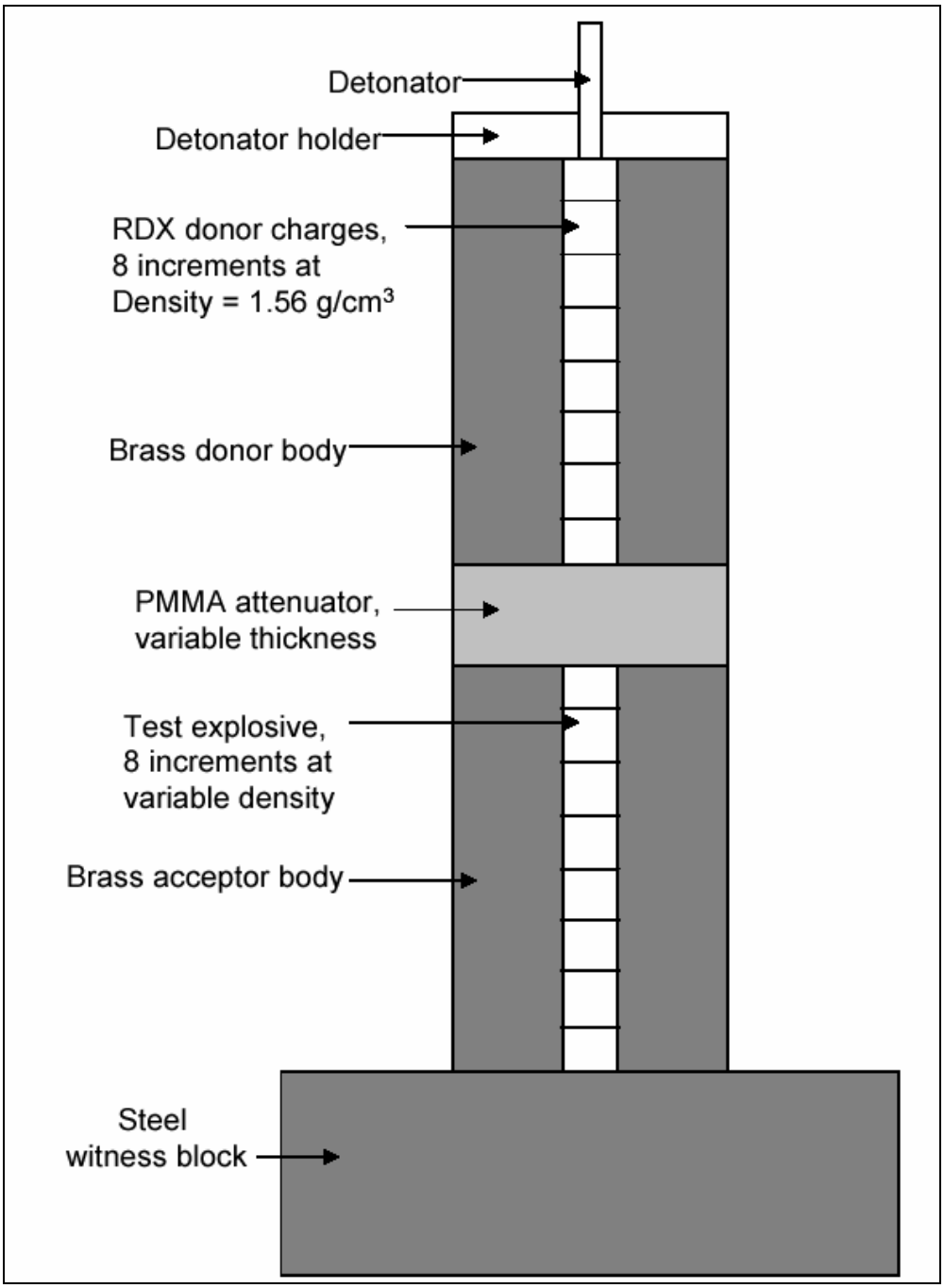

FIGURE 1. Small Scale gap test assembly.

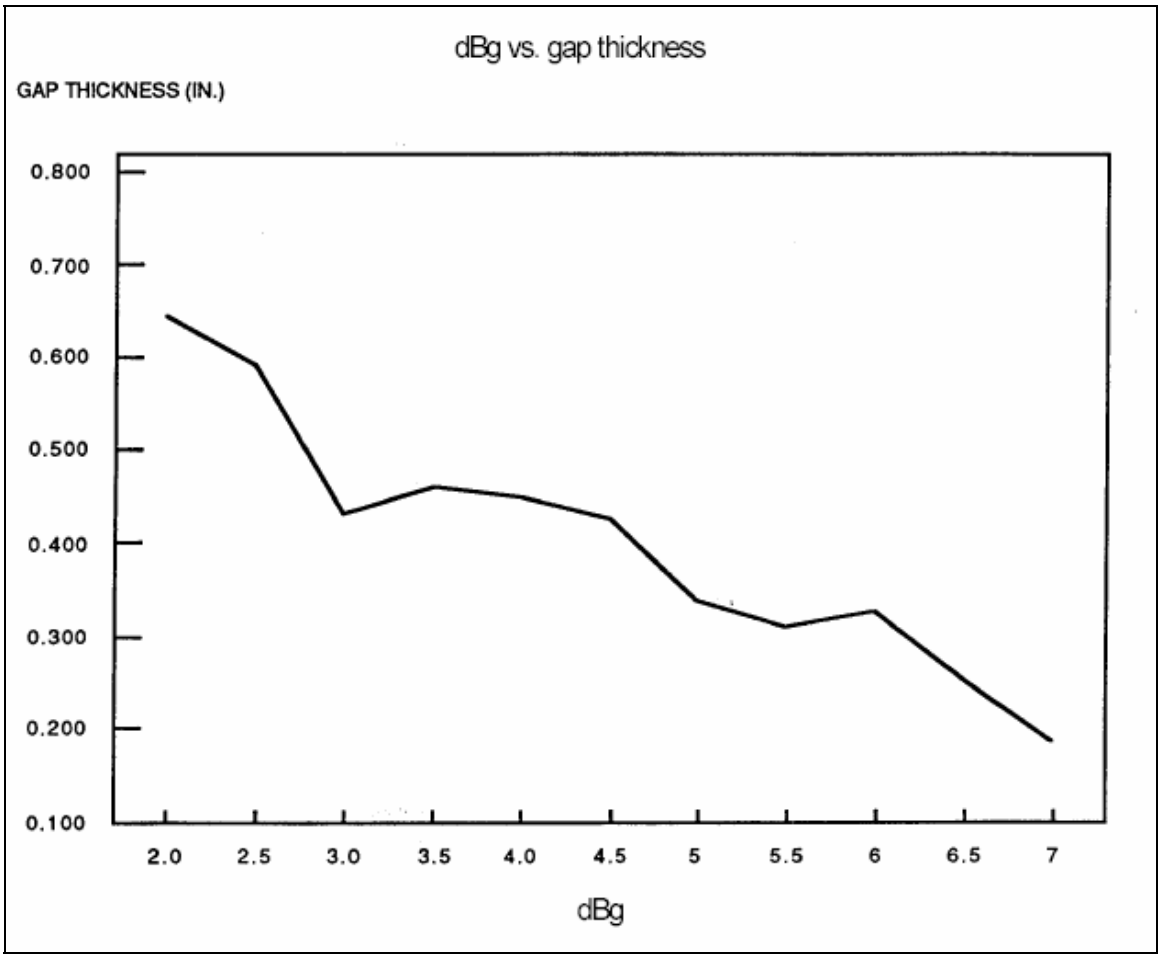

TABLE II. Small-scale gap test results.

Explosive	Load Presure (psi x 10^3)	Density (g/cm^3)	% TMD	50% Point (dbg)
Lead Azide	4	2.535	53.8	-3.662
	8	2.775	58.9	-0.302
	16	3.074	65.3	-0.239
	32	3.361	71.4	0.227
	64	3.663	77.8	-0.303
PETN	8	1.499	84.2	1.725
	16	1.600	89.9	2.468
	32	1.708	96.0	3.555
	64	1.775	99.7	4.998
RDX	10.0	1.546	85.8	3.250
	18.3	1.618	89.8	3.762
	31.0	1.702	94.5	4.413
	38.2	1.717	95.3	5.073
HMX	8	1.517	79.7	3.526
	16	1.627	85.5	3.475
	32	1.718	90.3	3.508
	64	1.814	95.3	4.644
Tetryl	4	1.434	82.9	3.267
	8	1.535	88.7	3.458
	16	1.623	93.8	4.360
	32	1.687	97.5	5.133
	64	1.732	100.1	6.093
TNT	4	1.353	82.0	5.067
	8	1.446	87.6	5.316
	16	1.549	93.8	5.877
	32	1.623	98.3	6.703
	64	1.561	100.0	8.066
PBXN-7	8	1.711	90.8	5.474
	16	1.792	95.1	5.910
	32	1.850	98.1	6.730
TATB	4	1.519	78.7	7.918
	8	1.645	85.2	8.573
	16	1.762	91.3	9.626
	32	1.840	95.3	11.091
	64		97.8	13.604

FIGURE 2. dBg vs. gap thickness.

Top

TEST DESCRIPTION

1. TYPE OF TEST: Shock Sensitivity - Super Large Scale Gap Test

2. PURPOSE: This test measures the sensitivity to detonation of an explosive exposed to an explosive induced shock. This procedure is applicable to explosives with large critical diameters ranging up to 7.0 inches.

3. BACKGROUND: This test was developed at Eglin Air Force base to measure the shock sensitivity of large critical diameter explosives charges

4. TEST ARRANGEMENT:

4.1 A schematic of the super gap test is shown in Figure 1. The donor charge in this test is an 8-inch diameter by 8-inch long unconfined Composition B cylinder. The donor charge is initiated with an electric detonator boosted with a 1-inch Composition A-5 pellet. Polymethylmethacrylate (PMMA) cards are used to attenuate the input shock. These cards, stacked to various thicknesses behind the donor charge, are disks of 8 inches in diameter and range from .063 to 2.00 inches thick. The acceptor charge is generally cast into a 0.50 inch thick 1018 mild steel seamless case with an O.D. of 8 inches and a length of 16 inches. Charges should be X-rayed prior to testing to ensure adequate quality of the cast charge. In the test set-up, piezoelectric pins, used to measure detonation velocity, are spaced every 2 inches along the acceptor charge with the first pin being 1/2 inch from the forward explosive metal interface.

4.2 A mild steel (e.g. SAE 1015 - 1026) witness plate, 16" x 16" x 0.75", is used to evaluate whether a detonation has occurred. The evaluation is similar to that used in performing the LSGT and ELSGT tests.

5. PROCEDURE:

5.1 An electric detonator or equivalent exploding bridgewire detonator is used to initiate the Composition A-5/Composition B donor. If the transmitted shock initiates a reaction in the test material, the effect of that reaction is shown as damage to the witness plate. The plate is inspected after each shot with a positive result or "go" defined as a neat hole punched in the plate. An example of a negative result or "no-go" is a broken plate or one with a poor quality hole. Twelve charges are usually required to obtain the mean or 50% point.

5.2 For an unknown material, the first test is generally conducted at zero gap. If no detonation occurs, two additional tests are performed at zero gap. If a detonation occurs, the next test is conducted at 50 cards; and thereafter, the number of cards is doubled until a negative result, "no-go," is obtained. Subsequent tests are made by dividing in half the gap between the closest "go" and "no-go" until one positive and one negative result, differing by one card, can be obtained.

6. RESULTS AND DATA:

6.1 The following information shall be reported for this test:

a. description of the ignition train (detonator, booster (if any) and donor charge)
b. type of case material used
c. criteria for determining go/no-go
d. number of trials per test series
e. number of test series conducted
f. results for candidate explosive

i. gap thickness in cards or inches for 50% probability of initiation
ii. pressure in the gap material at the end of the gap

g. results for reference comparison explosives

6.2 The pressure in the gap material at the end of the gap is obtained from the calibration of the gap thickness for the donor system employed. The data for the Composition A-5/Composition B donor and PMMA gap, which can be used to convert from a gap length in inches to a pressure in kilobars, are given in reference (b).

6.3 The pressure at the end of the gap can be converted to a pressure in the acceptor explosive by the use of the shock Hugoniot relationship of the gap material and of the acceptor explosive.

6.4 Detonation velocity data can also be used to measure whether a steady-state detonation is achieved along the length of the acceptor. In the detonating charge, sufficient data points may be obtained to calculate a detonation velocity. Increasing gap thickness, which corresponds to a weaker input shock, can be shown to result in increased run distance to detonation.

6.5 Results for selected explosives are shown in Table I. Since this is a relatively new test, the database is limited.

Table I. Typical Super Large Scale Gap Test Results.

Explosive	Density (g/cm^3)	50% Point (Inches)	50% Point (kbar)
TNT	1.58	12.0	7.5
PBXN-109	1.64	9.40	13.1
H-6	1.69	9.54	12.5
AFX 1100 Mod II	1.529	6.5	31.5
PBXW-126	1.78	4.10	58.1

7. SUPPLEMENTARY INFORMATION: For some materials, the length-to-diameter ratio (L/D) of 2 may be inadequate to resolve the type of reaction of the candidate substance. An L/D of 4 is recommended. Furthermore, the nature of the effect on the witness plate could be ambiguous. Instrumenting the sample with velocity pins is desirable in order to provide for determining whether the shock wave velocity is decaying to a sustained detonation velocity, or it is decaying to the sonic velocity of the sample. With such modifications, when applied to a solid propellant, and using the pass/fail criterion provided in reference (d), the SLSGT may serve to demonstrate that a large rocket motor qualifies for assignment to hazard division 1.3.

8. NATIONAL REFERENCES:

a. Foster, Craig, Parsons and Gunger, “Suppression of Sympathetic Detonation,” Proceedings of the 22nd Explosive Safety Seminar, Houston, TX, August 1983 (held under the sponsorship of the Department of Defense Explosive Safety Panel).
b. Glenn, J. G., Aubert, S. A., and Gunger, M. E., “Development and Calibration of a Super Large Scale Gap Test,” WL-TR-96-7039, August 1996.
c. NATO STANAG 4488 Ed 1, Explosives, Shock Sensitivity Test(s).
d. TB 700-2, Department of Defense Explosives Hazard Classification Procedures. Also known as NAVSEAINST 8020.8B, Air Force TO 11A-1-47, and DLAR 8220.1.

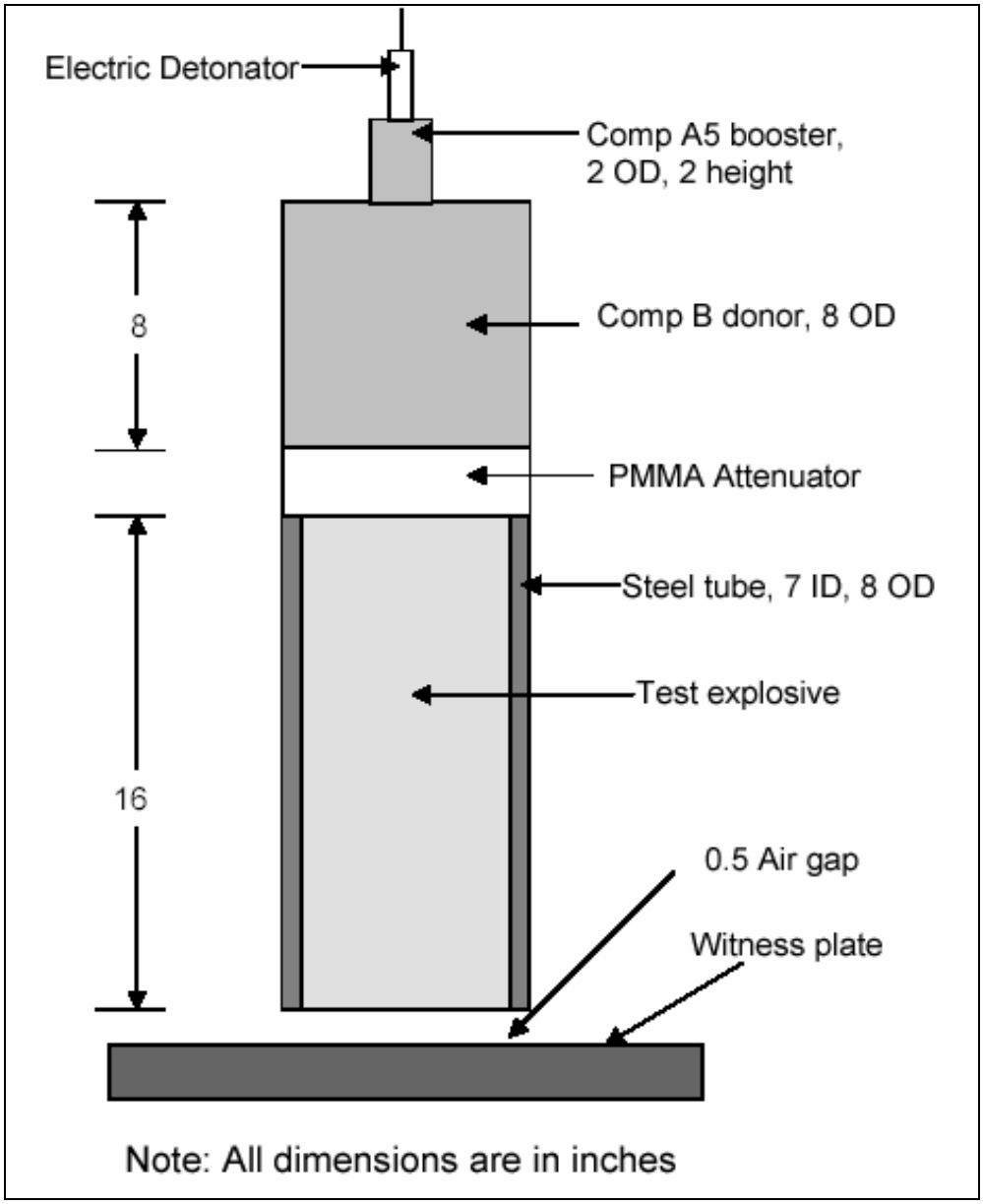

FIGURE 1. Typical super large scale gap test set-up.

Top

TEST DESCRIPTION

1. TYPE OF TEST: Shock Initiation - Insensitive High Explosive (IHE) Gap Test

2. PURPOSE: This test measures the sensitivity to detonation of an explosive exposed to an explosive induced shock. This procedure is applicable to explosives with large critical diameters ranging up to 0.75 inch.

3. BACKGROUND: The test was developed to provide a means for measuring the shock sensitivity of insensitive high explosives. The technical objective was to develop a procedure that subjects the test explosive to stresses of 15-80 kbar with a pulse width of several microseconds.

4. TEST ARRANGEMENT: A schematic of the test setup is shown in Figure 1. The test uses a pressed pentolite explosive (density of 1.56 g/cm^3) donor system. This consists of two stacked pellets, each 1.0-inch thick and 2.0 inches in diameter. These are the same as the pentolite boosters used in the Large Scale Gap Test described in Test Method U.S. 201.04.002. Polymethylmethacrylate (PMMA) spacers are used as the attenuator material between the donor and acceptor charges. Attenuators are machined from 2-inch diameter PMMA stock and are used in standard thicknesses of 0.010, 0.050, 0.100, 0.250, 0.500, 0.750, 1.00, and 1.50 inches. Explosive test samples are cast into a steel cylinder 2 inches long with a 0.5 inch inner diameter and an outer diameter of 0.75 inch. Pressed samples are generally fabricated outside of the test assembly and slid into the acceptor test body. To minimize density gradients, four samples 0.50 inch thick are incorporated into the acceptor body. Unless otherwise specified, powders are sieved and the fraction ranging from 37 to 75 cm is used. Samples, however, may also be pressed directly into the acceptor body. A 0.59 inch thick PMMA spacer is used to separate the base of the acceptor charge and the witness block. The assembly is placed on a steel witness block (3.0 inches in diameter and 1.5 inches thick) which is used to determine whether a detonation has occurred.

5. PROCEDURE:

5.1 In general, a minimum of eight acceptor test bodies are prepared for each explosive test series. The test samples are conditioned at 25°C for 4 hours prior to testing to minimize temperature variation effects on shock sensitivity. “A detonator (E1A, No. 8 blasting cap, or equivalent EBW detonator) is used to initiate the pentolite donors which transmit a shock wave through the PMMA gap and into the acceptor. If the transmitted shock initiates a reaction in the test material, the effect of that reaction is shown as damage to the witness plate and break up of the acceptor confining sleeve. For the first test, no attenuator is used in order to obtain a representative example of a “go”. The plate is inspected after each shot with a positive result or "go" defined as a dent exceeding half the depth of the result obtained without an attenuator. Conversely, a negative result or "no-go" is defined as a dent less than half the depth of that obtained with the calibration shot.

5.2 For an unknown material, the first test is generally conducted at zero gap. If no detonation occurs, two additional tests are performed at zero gap. If a detonation occurs, the next test is conducted at 50 cards; and thereafter, the number of cards is doubled until a negative result, "no-go," is obtained. Subsequent tests are made by dividing in half the gap between the closest “go” and “no-go” until one positive and one negative result, differing by one card, can be obtained.

5.3 References (a) and (b) provide a more detailed description of the test procedure and typical test results obtained in the test.

6. RESULTS AND DATA:

6.1 The following information shall be reported for this test:

a. description of the initiation train (detonator, booster (if any) and donor charge)
b. method for loading the test hardware (e.g., sample cast directly into steel tube, pressed pellets slipped into tube, molding powder pressed directly into tubes)
c. criteria for determining go/no-go
d. number of trials per test series
e. number of test series conducted
f. results for candidate explosive
   i. gap thickness in cards or inches for 50% probability of initiation
   ii. pressure in the gap material at the end of the gap
g. results for reference explosives

6.2 The pressure in the gap material at the end of the gap is obtained from the calibration of the gap thickness for the donor system employed. The calibration data for a pentolite booster and PMMA gap are given in Table I, which can be used to convert from a gap length in inches to a pressure in kilobars.

6.3 The pressure at the end of the gap can be converted to a pressure in the acceptor explosive by the use of the shock Hugoniot relationship of the gap material and of the acceptor explosive.

6.4 Results for some common explosives are shown in Table II.

7. SUPPLEMENTARY INFORMATION:

8. NATIONAL REFERENCES:

a. Adolph, Horst, The Insensitive High Explosives Gap Test, NSWC TR 86-058, January 15, 1987.

b. Spivak, Timothy, et al., Insensitive High Explosives Gap Test Data, NSWC TR 88-282, September 30, 1988.

c. Erkman, J.O., Edwards, D.J., Clairmont, A.R., Jr., and Price, D., Calibration of the NOL Large-Scale Gap Test; Hugoniot Data for Polymethyl Methacrylate, NOLTR 73-15, April 1973.

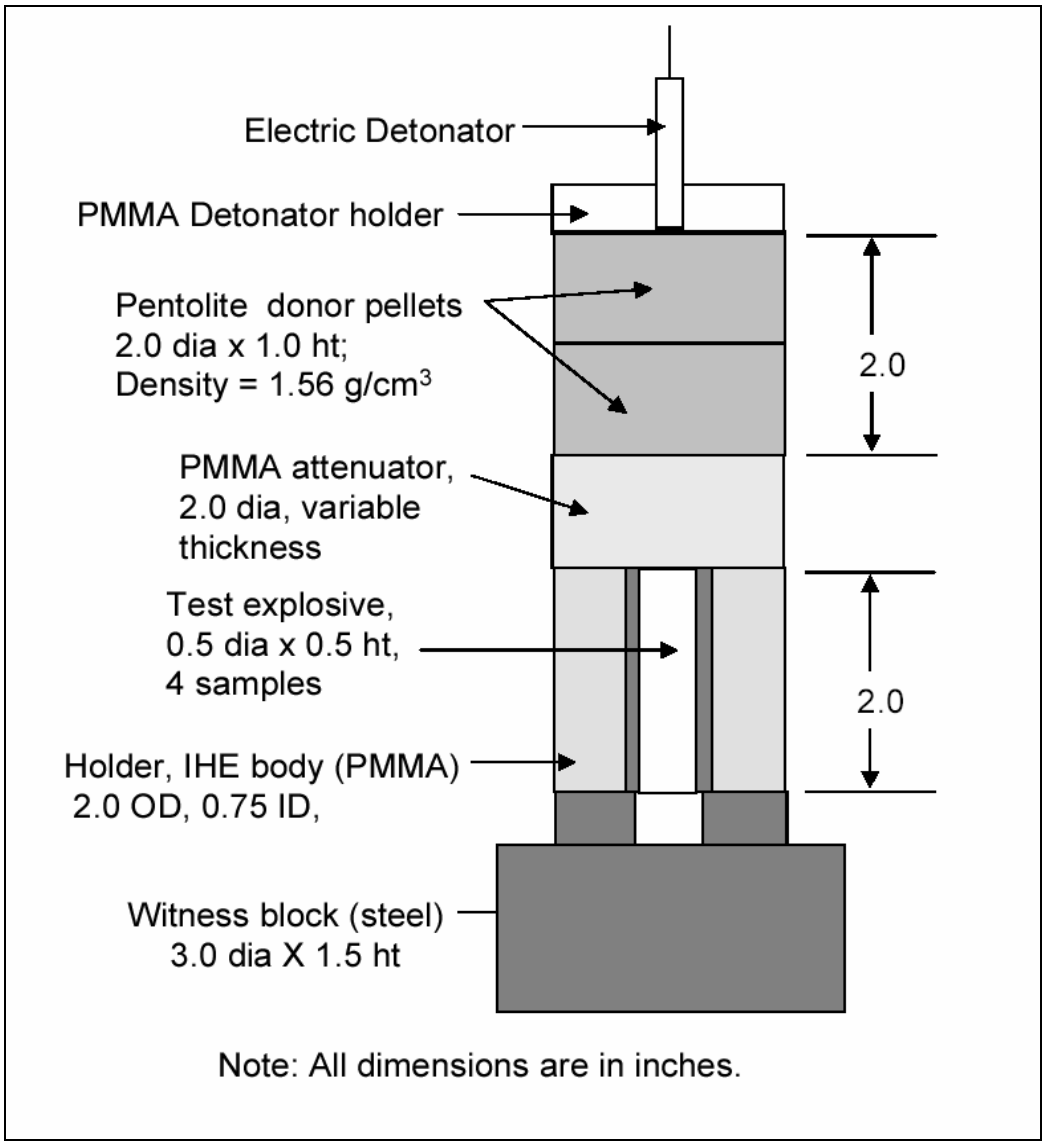

FIGURE 1. Insensitive high explosives gap test set-up.

TABLE I. NOL large scale gap test calibration data.

Calibration of NOL Large Gap Test for Lot 718 Pentolite
Number of cards in gap is sum of a number in first row and a number in the first column. One card is 0.01 inch; pressure in kilobars.

	1	2	3	4	5	6	7	8	9	10
0	213.1	202.5	192.9	184.2	176.3	169.2	162.7	156.8	151.4	146.5
10	142.0	137.9	134.1	130.6	127.3	124.3	121.6	119.0	116.6	114.4
20	112.3	110.4	108.5	106.8	105.2	103.7	102.2	100.9	99.6	98.3
30	97.2	96.0	95.0	93.9	92.9	92.0	91.1	90.2	89.3	88.5
40	87.7	86.9	86.2	85.4	84.7	84.0	83.3	82.6	82.0	81.3
50	80.7	80.1	79.5	78.9	78.3	77.7	77.1	76.6	76.0	75.5
60	74.9	74.4	73.9	73.3	72.8	72.3	71.8	71.3	70.8	70.3
70	69.8	69.3	68.9	68.4	67.9	67.5	67.0	66.6	66.1	65.7
80	65.2	64.8	64.3	63.9	63.5	63.1	62.6	62.2	61.8	61.4
90	61.0	60.6	60.2	59.8	59.4	59.0	58.6	58.2	57.8	57.4
100	57.1	56.7	56.3	55.9	55.6	55.2	54.9	54.5	54.1	53.8
110	53.4	53.1	52.7	52.4	52.1	51.7	51.4	51.0	50.7	50.4
120	50.1	49.7	49.4	49.1	48.8	48.5	48.2	47.8	47.5	47.2
130	46.9	46.6	46.3	46.0	45.7	45.4	45.2	44.9	44.6	44.3
140	44.0	43.7	43.4	42.8	42.2	41.6	41.0	40.5	39.9	39.4
150	38.9	38.3	37.8	37.3	36.8	36.3	35.8	35.4	34.9	34.4
160	34.0	33.6	33.1	32.7	32.3	31.8	31.4	31.0	30.6	30.2
170	29.9	29.5	29.1	28.7	28.4	28.0	27.7	27.3	27.0	26.7
180	26.3	26.0	25.7	25.4	25.1	24.8	24.5	24.2	23.9	23.6
190	23.3	23.0	22.8	22.5	22.2	22.0	21.7	21.5	21.2	21.0
200	20.7	20.5	20.3	20.1	19.8	19.6	19.4	19.2	19.0	18.8
210	18.6	18.4	18.2	18.1	17.9	17.7	17.5	17.4	17.2	17.0
220	16.9	16.7	16.5	16.4	16.2	16.1	15.9	15.8	15.6	15.5
230	15.3	15.2	15.1	14.9	14.8	14.7	14.5	14.4	14.3	14.1
240	14.0	13.9	13.8	13.7	13.5	13.4	13.3	13.2	13.1	13.0
250	12.9	12.7	12.6	12.5	12.4	12.3	12.2	12.1	12.0	11.9
260	11.8	11.7	11.6	11.5	11.4	11.3	11.3	11.2	11.1	11.0
270	10.9	10.8	10.7	10.6	10.6	10.5	10.4	10.3	10.2	10.2
280	10.1	10.0	9.9	9.8	9.8	9.7	9.6	9.5	9.5	9.4
290	9.3	9.3	9.2	9.1	9.1	9.0	8.9	8.9	8.8	8.7
300	8.7	8.6	8.6	8.5	8.4	8.4	8.3	8.3	8.2	8.1
310	8.1	8.0	8.0	7.9	7.9	7.8	7.8	7.7	7.7	7.6
320	7.6	7.5	7.5	7.4	7.4	7.3	7.3	7.2	7.2	7.1
330	7.1	7.0	7.0	7.0	6.9	6.9	6.8	6.8	6.7	6.7
340	6.7	6.6	6.6	6.6	6.5	6.5	6.4	6.4	6.4	6.3
350	6.3	6.3	6.2	6.2	6.2	6.1	6.1	6.1	6.0	6.0
360	6.0	5.9	5.9	5.9	5.8	5.8	5.8	5.8	5.7	5.7
370	5.7	5.6	5.6	5.6	5.6	5.5	5.5	5.5	5.5	5.4
380	5.4	5.4	5.4	5.3	5.3	5.3	5.3	5.2	5.2	5.2
390	5.2	5.1	5.1	5.1	5.1	5.1	5.0	5.0	5.0	5.0
400	5.0									

Note: Results are nominal for 0 to 39 cards.

TABLE II. IHE gap test results.

Explosive	Density (g/cm^3)	%TMD	50% Point (inch)	50% Point (kbar)
HMX	1.81	95.1	2.23	16.4
DATB	1.74	94.6	1.48	39.9
TATB	1.84	94.9	0.85	63.1
TNT (Pressed)	1.55	93.8	2.03	20.1
PBXN-7	1.81	95.8	1.93	22.5
PBXN-5	1.75	92.1	2.01	20.5

Top

TEST DESCRIPTION

1. TYPE OF TEST: Shock Sensitivity - Wedge Test

2. PURPOSE: The wedge test is used to determine the shock initiation characteristics of an energetic material.

3. BACKGROUND:

3.1 A planar shock wave is introduced into the explosive to be tested. As the shock progresses through the explosive it generates hot-spots that build up to a detonation. The objective of the wedge test is to determine the run to detonation point at which the detonation wave overtakes the shock wave. This point is characterized by a unique time and distance to detonation for a specific set of input conditions.

3.2 It should be noted that this is just one test for sensitivity and the relative sensitivity rankings between energetic materials may vary for different tests. For example, the NOL Large Scale Gap Test Method U.S. 201.04.002 gives markedly different sensitivity rankings for the same energetic materials.

4. TEST ARRANGEMENT:

4.1 A streak camera (reference (a)) is used to record the wedge test event. The surface of the wedge is mirrored to reflect light into the camera. A laser is used to align the test fixture and the light sources to the streak camera axis. When either the shock wave or detonation wave reaches the surface, the surface distorts so that light is no longer reflected into the camera. As the detonation wave overtakes the shock wave, the slope of the reflected light trace on the film changes. Thus, the run to detonation point can be determined from the film record.

4.2 The results of a series of wedge tests are usually presented as plots of input pressure versus distance to detonation and time to detonation (Pop-plots). With these plots energetic materials may be compared with regard to relative sensitivity. This is done by assuming that for a given distance to detonation, the energetic material that requires the lower input pressure to achieve this distance is the more sensitive.

4.3 A schematic of the wedge test set-up is shown in Figure 1. A plane wave generator introduces a planar shock wave into the booster charge. The booster charge detonates, introducing a shock wave into the attenuator plates and hence, into the explosive wedge sample. Different booster/attenuator combinations can be used to vary the input pressure into the sample.

4.4 The test arrangement described herein uses plane wave generators which are Los Alamos National Laboratory P-081 lenses, 8 inches in diameter. All of the attenuator systems terminate in Plexiglas. The booster attenuator systems used for this test set-up are listed in Table 1.

5. PROCEDURE:

5.1 The wedges are prepared by casting the explosive into the Plexiglas mold shown in Figure 2. The wedges are radiographed for defects to check for density variations. It should be noted that relatively large grains may result in shock and detonation velocity variations.

TABLE 1. Booster attenuator combinations for a wedge test series.

Shot	Wedge Height	Booster Charge[1/]	Driver System
1	1.81 inch (46.0 mm)	Comp B	0.965 inch (24.5 mm) PMMA
2	1.81 inch (46.0 mm)	Comp B	0.839 inch (21.3 mm) 304 S.S. 0.724 inch (18.4 mm) PMMA
3	1.79 inch (45.5 mm)	BARATOL	0.965 inch (24.5 mm) PMMA
4	1.81 inch (46.0 mm)	BARATOL	0.992 inch (25.2 mm) 304 S.S. 0.882 inch (22.4 mm) PMMA
5	1.81 inch (46.0 mm)	Emulsion Explosive[2/]	1.00 inch (25.4 mm) 304 S.S. 0.882 inch (22.4 mm) PMMA
6	1.79 inch (45.5 mm)	Emulsion Explosive[2/]	0.996 inch (25.3 mm) PMMA

1/ All the booster charges were 1.00 inch thick, and 8 inches in diameter.
2/ Nelson Brothers ammonium nitrate/oil emulsion sensitized with microballoons, density = 1.02 g/cm^3.
Note: S.S. means stainless steel; PMMA means polymethylmethacrylate.

5.2 A shock is introduced into the wedge sample using the plane wave generator. A streak camera is used to record the wedge test event. The surface of the wedge is mirrored to reflect light into the camera. When either the shock wave or detonation wave reaches the surface, the surface distorts so that the light is no longer reflected in the camera. As the detonation wave overtakes the shock wave the slope of the reflected light trace on the film changes. Thus, the run to detonation point can be determined from the film record. A representative streak camera record is given in Figure 3.

5.3 Further details on procedure are discussed in reference (a).

6. RESULTS AND DATA:

6.1 The following information shall be reported for this test:

a. description of the initiation train (detonator, plane wave generator, booster material)
b. dimensions of the plane wave generator
c. dimensions of the test charge
d. data analysis as described below for candidate explosive

6.2 The film records are subsequently digitized on an optical comparator, and the required parameters for reduction of the film data in the order they were analyzed are outlined below.

6.3 FREE SURFACE VELOCITY: To determine the input conditions at the terminal attenuator/explosive sample interface, one needs to measure the free surface velocity ($U_{f.s.}$) of the terminal attenuator by observing the reflection of the needle off the mirrored surface as it moves toward the actual needle. With the defined viewing angle, the magnification, and the camera writing speed, the free surface velocity can be calculated by using the following equation:

$$U_{f.s.} = U_c \tan A/2M \sin B$$

Where:
U_c = camera writing speed (mm/μs)
A = angle formed between moving image and real needle
M = magnification
B = viewing angle (fixed at 45°)

6.4 FILM DATA CONVERSION

6.4.1 The film records of the wedge traces are typically read in 0.0098 or 0.0197 inch (0.250 or 0.500 mm) increments along the time axis. They are converted to real times using the following equation:

$$t = Y_f/U_c$$

Where:
t = real time (μs)
Y_f = incremental film time (mm)
U_c = camera writing speed (mm/μs)

6.4.2 The film space data associated with the time readings are then reduced using a similar triangle methods described by Craig (reference (b)). In this method, one only needs to know the actual wedge height and to measure the total film trace width to convert film space to real space. The data are converted using the equation below:

$$X_r = (W_h/W_f)X_f$$

Where:
X_r = real space (mm)
W_h = wedge height (mm)
W_f = wedge film trace width (mm)
X_f = film trace measurements (mm)

6.5 TRANSITION TO DETONATION AND SHOCK VELOCITY:

6.5.1 The transition to detonation is assumed to occur at the region of maximum acceleration along the film trace. These points were read directly from the film records.

6.5.2 To determine the initial shock velocity (U_{so}) in the explosive wedge sample, a plot is made of incremental average velocities (x/t) versus time (t) up to the transition point. Inconsistent data points at the ends of the trajectory are often discarded. The data are then fitted, by a least-squares method, as listed below:

$$X = U_{so}t + 1/2\ bt^2$$

Where:
X = real space (mm)
t = real time (μs)
b = acceleration of shock wave (mm/μs^2)

6.5.3 The derivative evaluated at t = 0 is taken as the initial shock velocity (see reference (c)).

6.6 SHOCK HUGONIOT:

6.6.1 To determine the shock Hugoniot of the explosive, only two parameters are needed. These are the shock velocity in the terminal attenuator and the shock velocity in the explosive. To determine the shock velocity in the terminal attenuator, one needs to know its particle velocity and its shock Hugoniot. The particle velocity in the terminal attenuator is defined by assuming that it is one-half of the free surface velocity. The shock Hugoniot for Plexiglas has been well defined by the equation below:

$$U_s = 2.598 + 1.516\ Up \text{ (see reference (d))}$$

6.6.2 Since the shock velocity in the explosive is known from the film records, the particle velocity and initial pressure in the explosive can be calculated using the impedance matching technique which derives the following equations:

$P_e = [Z_a]Z_e/(Z_a + Z_e)]] U_{f.s}$.
$U_{pe} = [Z_a/(Z_a + Z_e)]] U_{f.s}$.

Where:
P_e = pressure in explosive sample (GPa)
Z_i = shock impedance = $U_s\rho_{oi}$
U_{si} = shock velocity (mm/μs)
ρ_{oi} = initial density (g/cm^3)
U_{pe} = particle velocity in explosive (mm/μs)
$U_{f.s}$. = free surface velocity of attenuator (mm/μs)

6.6.3 The impedance matching technique is not accurate as the reflected attenuator Hugoniot and the explosive's Hugoniot are defined by their respective Rayleigh lines. However, the use of other techniques does not substantially increase the accuracy of the shock Hugoniot in this wedge test series.

7. SUPPLEMENTARY INFORMATION:

7.1 The traditional method for plotting the data from the wedge test is known as the Pop-plot. Popolato found that over a range of input pressures, log-log plots of run to detonation, or time to detonation versus pressure, are linear. The equation of the Pop-plot over the linear range, in run to detonation versus pressure form, is then:

$$\log P = A + B \log X^*$$

7.2 In this form, P is in gigapascals, X* is in millimeters, and A and B are determined from a least squares fit in the log-log plane. Similarly, Time to Detonation versus Pressure takes on the same form with different constants.

7.3 Pop-plots provide distance to detonation versus input pressure and time to detonation versus input pressure of a sample explosive. At very low input pressures, the Pop-plot becomes non-linear and pressure approaches a vertical asymptote. This implies that below a certain pressure the run distance can be considered to be infinite and the explosive will not detonate.

7.4 The interpretation of sensitivity behavior of an explosive using these plots is done by observing the behavior of the constants A and B for various explosives. The intercept value A defines the vertical positioning of the Pop-plot; thus it defines the shock region of interest, and B is the slope of the line. Hence, an explosive with a low intercept and shallow slope would be more sensitive at higher pressures and less sensitive at lower pressures compared to a second explosive with higher intercept and steeper slope.

8. NATIONAL REFERENCES:

a. Davis, W. C. and Craig, B. G., “Smear Camera Technique for Free Surface Velocity Measurement,” Review of Scientific Instruments, Vol. 32, No. 5, May 1961, p. 579.
b. Craig, B. G., Personal Communication, May 1987.
c. Gibbs, T. R. and Popolato, A., eds., LASL Explosive Property Data, University of California Press, Berkeley, CA, 1980, pp. 295-296.
d. Los Alamos Scientific Laboratory, Selected Hugoniots, by Group GMX-6, Report LA-4167MS, Los Alamos, NM, May 1969.

e. Lindfors, Allen J. and Sandstrom, Frederick W., Wedge Test Results for PBXN-107 Type II, NWC TM 6792, Naval Weapons Center, China Lake, CA, July 1990.

FIGURE 1. Schematic of the wedge test set-up.

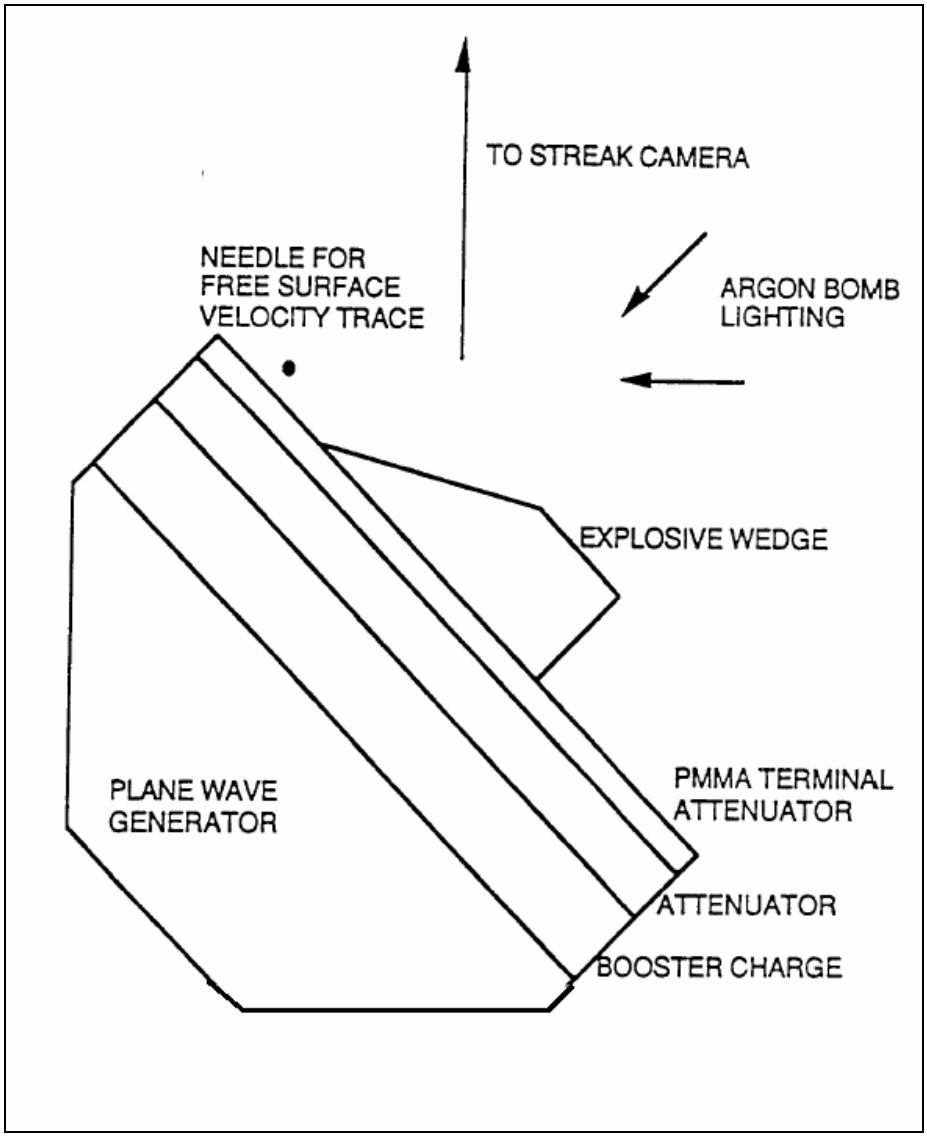

FIGURE 2. Explosive wedge plexiglas holder

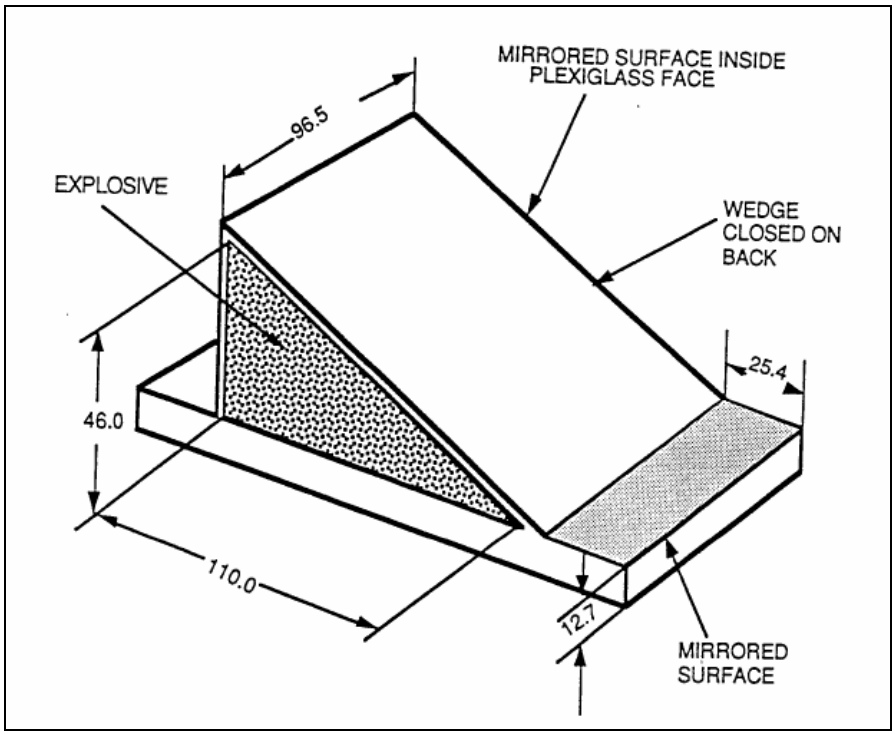

NOTE: All dimensions are in millimeters

FIGURE 3. Streak camera record of a wedge test of PBXN-107 Type II

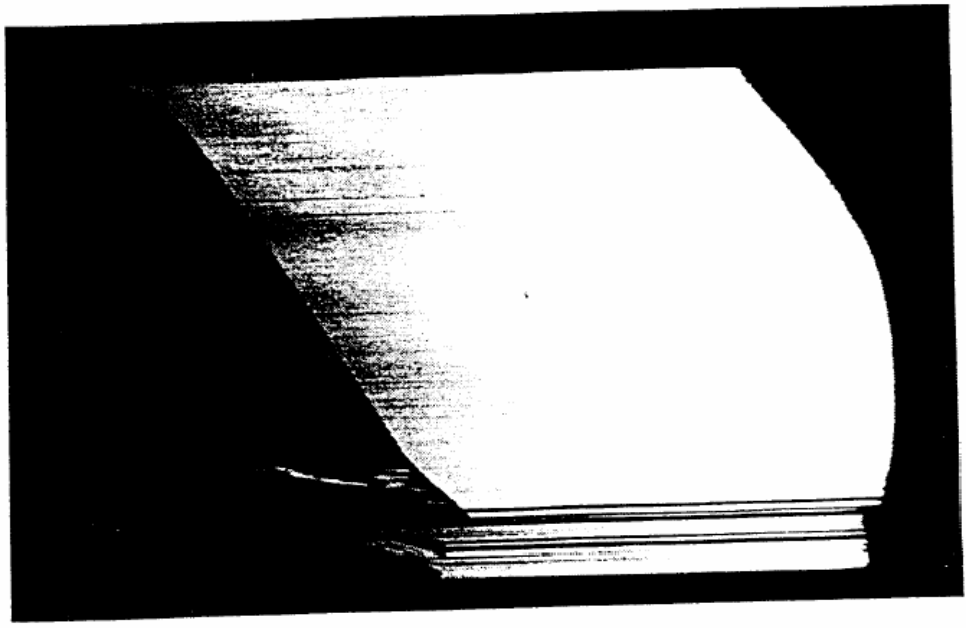

Top

TEST INFORMATION SHEET

1. TYPE OF EXPLOSIVE: High Explosives, Propellant, and Pyrotechnics

2. TEST TITLE: Shock Sensitivity Test - Picatinny Arsenal Method

a. Type of Test: Hazard Assessment/Sensitivity.

b. Description: The test elements consist of a donor explosive consisting of two tetryl pellets, cast Aerowax spacers (gap), the test explosive, and a metal witness plate. The witness plate is used to determine whether the test result was a "go" or "no-go".

c. Information Requirements for Assessment: Shock sensitivity data on two reference comparison explosives tested on the same machine.

d. Typical Results:

Explosive	50% Probability Point (cm)
Tetryl	5.11 (2.01-inch)
Comp B	3.56 (1.40-inch)
TNT (Case)	2.08 (0.82-inch)

e. Repeatability and Reproducibility: Good

3. NATIONAL REFERENCES:

a. Walker, G. R., Whitbread, E. G., and Hornig, D. C., Canadian Armament Research and Development Establishment - The Technical Cooperation Program Manual of Sensitiveness Tests by TTCP Panel 0-2 (Explosives) Working Group on Sensitivity, February 1966.

Top

TEST INFORMATION SHEET

1. TYPE OF EXPLOSIVE: High Explosives, Propellant, and Pyrotechnics

2. TEST TITLE: NSWC Low Pressure - Long Duration Shock Test.

a. Type of Test: Hazard Assessment/Sensitivity.

b. Description: High explosive samples (acceptors 50.8 mm diameter x 12.7 mm thick) submerged in water are subjected to spherical shocks. The distances between an 0.45 kg (one-pound) spherical donor charge and the acceptors are adjusted to give various peaks entering shock pressures in the acceptors, typically in the range of 5-25 kBar. Burning is detected by the expansion of the acceptor after being struck by the shock. Observations are made with a high-speed framing camera using diffuse reflected back-lighting. The threshold for burning in this geometry is deduced from plots of expansion velocity vs. entering pressure. The results on numerous solid high explosives show that the threshold for burning obtained in the underwater test is between 3 and 10 kBar. This low threshold for burning in the underwater system is attributed to the long pulse duration, less curvature of the wave front, and the confinement offered by the water.

c. Information Requirements for Assessment: This test information is used to assess reaction from situations where low pressure-long duration, (nominally 25 μ pulse width) shock exists.

d. Typical Results:

Explosive	Density (g/cm^3)	Burning Threshold (kBar)
H-6	1.71	6.6
PBXW-109 (I)	1.66	7.0

e. Repeatability and Reproducibility: The thresholds for burning reactions are repeatable and reproducible. To determine the threshold of the test sample in terms of pressure requires knowledge of the unreacted Hugoniot of the test material.

3. NATIONAL REFERENCES:

a. Frankel, M. J., Liddiard, T. P., and Forbes, J. W., "Low- Level Shock Reaction Thresholds in High Explosives and Propellants", Combustion and Flame, Vol. 45, No. 1, January 1982.

Top

TEST INFORMATION SHEET

1. TYPE OF EXPLOSIVE: High Explosives, Propellant, and Pyrotechnics

2. TEST TITLE: Blasting Cap Test.

   a. Type of Test: Hazard Assessment/Sensitivity

   b. Description: This test determines whether or not a high explosive can be initiated by a blasting cap. The sample, a 5-cm (2-inch) cube, is centered on top of a 4-cm (1.57 inch) diameter solid lead cylinder, and a # 8 electric blasting cap (or equivalent) is centered perpendicular to and in contact with the top flat surface of the sample, using a 5-cm (2-inch) diameter wood or cork cylinder with a hole drilled in the center to position and secure the blasting cap to the sample. The cap is detonated and evidence of sample detonation is considered to be deformation (mushrooming) of the lead cylinder, which rests on a steel plate.

   c. Information Requirements for Assessment: This test determines the initiability of high explosives and propellants.

   d. Typical Results: RDX (powder) detonates; AFX-757 Negative.

   e. Repeatability and Reproducibility: Good

3. NATIONAL REFERENCES:

   a. NAVORDINST 8020.8, Explosives Hazard Classification Procedures, Department of the Navy, Latest revision.

   b. MIL-STD-2100 (OS), "Military Standard: Propellant, Solid, Characterization of", 30 March 1979.

   c. UN ST/SG/AC.10/11/Latest Revision, Recommendation on the Transport of Dangerous Goods – Test and Criteria.

Top

TEST INFORMATION SHEET

1. TYPE OF EXPLOSIVE: High Explosives, Propellant, and Pyrotechnics

2. TEST TITLE: SUSAN Projectile Impact Test - Lawrence Radiation Laboratory

   a. Type of Test: Hazard Assessment

   b. Description: This test employs a 5.4 kg (12 lb) projectile which contains slightly less than 0.45 kg (1 lb) of test explosive. The projectiles are fired from a smooth bore converted (3"/70) Naval gun. The gun muzzle is 3.6 m (12 ft) from the target plate. The projectile velocities range from 100 to 1400 feet per second (fps), although velocities up to 3500 fps are possible. If the explosive survives the initial impact in this test, other energy transfer mechanisms become dominant. After impact there is a rapid viscous flow of the explosive followed by friction associated with crushing, and eventually a "pinch" stage for explosive caught between the rear section of the projectile and the steel target plate.

   c. Information Requirements for Assessment: To determine the impact sensitivity of explosive billets in order to assess the relative behavior of explosives under field conditions of impact.

   d. Typical Results: Refer to SUSAN sensitivity curves in the detailed Procedure and Expression of Results segments of the detailed method description of this test.

   e. Repeatability and Reproducibility: To be supplied

3. NATIONAL REFERENCES:

   a. Walker, G.R., Whitbread, E. G., and Hornig, D. C. Canadian Armament Research and Development Establishment - The Technical Cooperation Program Manual of Sensitiveness Tests by TTCP Panel 0-2 (Explosives) Working Group on Sensitivity, February 1966. Edited by G. R., p. 74.

   b. NAVORD OD 44811, Method 5.6.2, pgs. 5-13, 1 January 1972.

   c. UN ST/SG/AC.10/11/Latest Revision, Recommendation on the Transport of Dangerous Goods – Test and Criteria.

Top

TEST DESCRIPTION

1. TYPE OF TEST: Sensitivity - Minimum Pressure for Vapor Phase Ignition - Liquid Propellants

2. PURPOSE: To determine the pressure below the point where it is impossible to ignite a monopropellant vapor or fuel vapor-air mixture by using a fixed quantity of energy applied in a well-defined manner.

3. BACKGROUND:

4. TEST ARRANGEMENT:

4.1 The test apparatus consists of a thermostat-equipped stainless-steel bomb where the monopropellant vapor or vapor-air mixture is introduced. The temperature and pressure of the internal volume of the bomb can be varied. Vapor ignition is accomplished by the electrical fusion of 0.0025-inch diameter Nichrome V wires. Figure 1 displays a schematic drawing of the test apparatus which consists of the following: (1) a thermostat-equipped stainless steel bomb where the monopropellant vapor is placed, (2) a means of holding the small wires, (3) a means of removing carbonaceous material formed in the explosive decomposition (many of the substances which have been evaluated by this technique have been acetylenic compounds which give large quantities of carbonaceous residue), and (4) an electric current supply. In the present apparatus the wire-fusion time is determined by the voltage applied to the wire and the characteristics of the fuse wire.

4.2 The bomb (figures 2 and 3) was designed with an internal volume of 25 cm^3 (liner in) and 45 cm^3 (liner out) to permit testing small quantities of fuel. The overall internal volume, including leads and pressure transmitter (figures 4 and 5) is 98 cm^3. The stainless steel removable liner also permits sampling and weighing of residual solids after an explosion. The bomb is electrically heated and capable of being regulated from ambient temperature to 260 °C by a Fenwal thermoswitch. In this temperature range, sufficiently high pressures can be obtained with most of the higher molecular weight compounds to determine the minimum pressures for vapor-phase ignition.

5. PROCEDURE:

5.1 The sample is introduced in the gas phase from a conventional-heated manifold for handling organic vapors. Fuels with less than adequate vapor pressure are introduced as liquids by means of a syringe-type injector through hypodermic tubing. The tubing site is determined by the physical properties of the liquid fuel. The wire holders are spring loaded, and the wire is threaded through small holes in each post. The spring holds a plunger firmly against the wire so that good electrical contact is made. It becomes necessary when carbonaceous products are formed to clean the holes and the plunger face each time a new wire is threaded.

5.2 All measurements have been made with Nichrome V wires, 0.118 inch long, with a diameter of 0.0025 inch.

5.3 In an experiment, the appropriate fusion time and energy are fixed by setting the applied voltage and resistance. Ignition trials are then made at different pressures while the critical pressures between ignition and non-ignition are observed. Occurrence of ignition is indicated by the flash observed through the Pyrex window in the bottom of the bomb by means of a mirror.

5.4 The first operation in making a determination of the minimum pressure for vapor-phase ignition is the adjustment of the Fenwal thermoswitches (in all parts of the system in contact with fuel vapors) to the setting necessary to maintain the desired temperature. The fuse wire is threaded into the wire holder and

the bomb head secured by means of the lock ring. When liquid fuels are being evaluated, the hypodermic
the bomb head secured by means of the lock ring. When liquid fuels are being evaluated, the hypodermic

tubing is then connected to the fuel injector. When the bomb assembly and all leads have come to equilibrium temperature, the bomb is evacuated. The bomb and leads are flushed and evacuated several times with the fuel to be tested and then evacuated again. The bomb is then filled with vapor to a pressure approximating the estimated minimum pressure for vapor-phase ignition, and the ignition is attempted by fusion of the wire. The voltage and resistance in the igniting circuit have previously been set to give the desired energy and fusion time. If ignition is not obtained, the pressure is increased until ignition occurs. In order to ascertain the point accurately, several additional shots are always carried out at slightly higher and lower pressures. A judicious choice of test pressures reduces the number of tests. The output from the strain gauges is recorded on a voltmeter (a recording potentiometer or oscilloscope is used when the dynamic pressure in the reaction is measured).

5.5 At the completion of each minimum pressure determination, the exact value of pressure is verified by calibrating the pressure transmitter with nitrogen pressure in the bomb and using Bourdon tube gauges which have been standardized by means of a dead weight tester. These gauges are also checked periodically with a Heise test gauge. A vacuum cleaner and stiff brush are used to remove any excess carbon from the bomb. The pressure transmitter is cleaned by flushing it with a high-pressure air jet. Fuels that have vapor pressures above 1.0 atmosphere are admitted to the bomb through the “hot fuel” inlet. The fuel is contained in a small stainless-steel cylinder. A hot oil bath is raised so that the fuel tank is immersed in the oil until the required vapor pressure is obtained in the bomb. The oil bath is lowered immediately to avoid possible decomposition in the fuel tank.

6. RESULTS AND DATA:

6.1 Variation in bomb size appears to have an effect on minimum ignition pressure (see table I). The data were obtained in an ignition bomb, at 15 to 17°C, similar to that described herein. The ignition source in these experiments was a 10-mm length and 0.5-mm diameter platinum wire with an ignition current sufficient to cause an “instantaneous fusion” of the wire (H ≈ 15 joules).

6.2 If the fuse-wire ignition energy is plotted as a function of the pressure, loops are sometimes obtained in the curve which are dependent upon the fusion time. An increase in energy (applied voltage in the fuse wires) decreases the fusion time. As the fusion time increases, heat loss from the wire due to thermoconductivity and convection effects can be expected to become significant.

6.3 The unusual shape of the ignition energy-pressure curves can probably be explained by a detailed consideration of some of the effects just discussed.

TABLE I. Minimum ignition pressure of acetylene.[1]

Bomb Diameter (mm)	Minimum Ignition Pressure, atm_{abs}.
50	1.80
100	1.60
150	1.45
200	1.40
270	1.40

[1] Data extracted from Acetylene and Carbon Monoxide Chemistry, Copenhaver,J.W. and Bigelow, M.H., p. 315, New York, Reinhold Publishing Corporation,1949.

6.4 For comparison of monopropellants, it is necessary to fix some experimental conditions. Thus, the fusion time and ignition energy are held constant (approximately 5 milliseconds and 0.07 joules) and the minimum ignition pressure determined. The results might thus be regarded as giving the lower pressure limit at a given energy level and time for the wire to fuse. Data obtained in this bomb (and in a larger bomb) gave equivalent relative results in comparing the different fuels. Some typical data are reproduced in table II. This table contains the value normally considered for the minimum ignition pressure (the value at t = 5 milliseconds and H = 0.07 joules). The fusion time and actual energy are indicated. Most work has been attempted at a temperature of 100°C; however, this is frequently impossible as with n-propyl nitrate because of the lack of sufficient vapor pressure at 100 °C to obtain the minimum pressure.

7. SUPPLEMENTARY INFORMATION: Further details on procedures and test equipment may be obtained from reference (a).

8. NATIONAL REFERENCES:

a. Liquid Propellant Test Methods, Chemical Propulsion Information Agency (CPIA), July 1969. (Obtainable through the Defense Technical Information Center, DTIC).

TABLE II. Comparison of monopropellant ignition characteristics obtained at Experiment Incorporated.

Characteristics	Ethylene Oxide	N-Propyl Nitrate	Acetylene	
	100°C	160°C	100°C	150°C
Minimum Ignition Pressure, atm	2.18	2.2	3.50	5.26
Fusion Time, milliseconds	1.15 to 5.20	2.3	1.2 to 16.0	1.20
Ignition Energy, joules	0.065 to 0.80	0.10	0.074 to 0.090	0.12
Minimum Ignition Pressure, atm, at t = 5 milliseconds, H = 0.07 joules	2.2	2.5 to 3.0	3.5	3.6

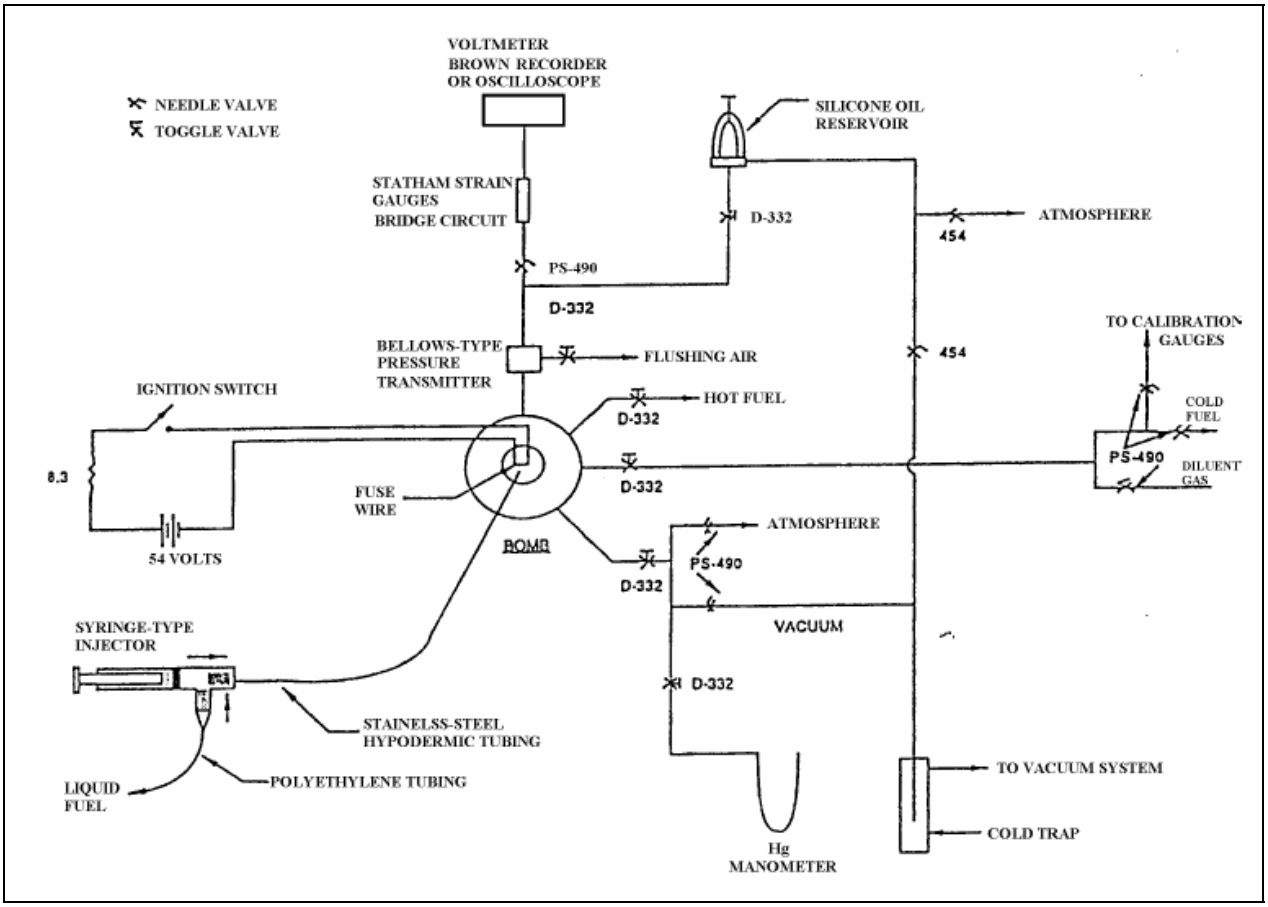

FIGURE 1. Minimum pressure for vapor phase ignition apparatus.

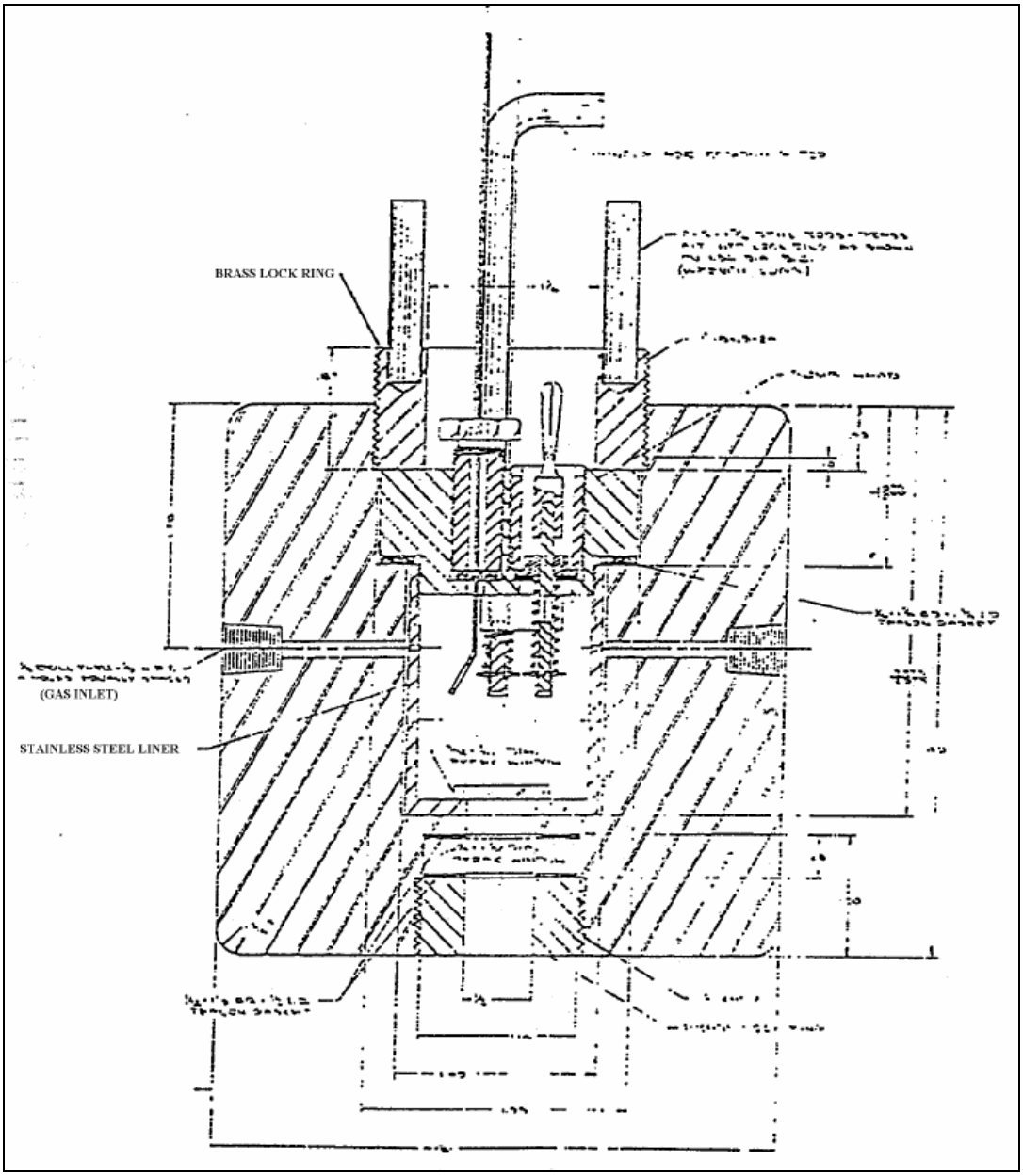

FIGURE 3. Bomb head.

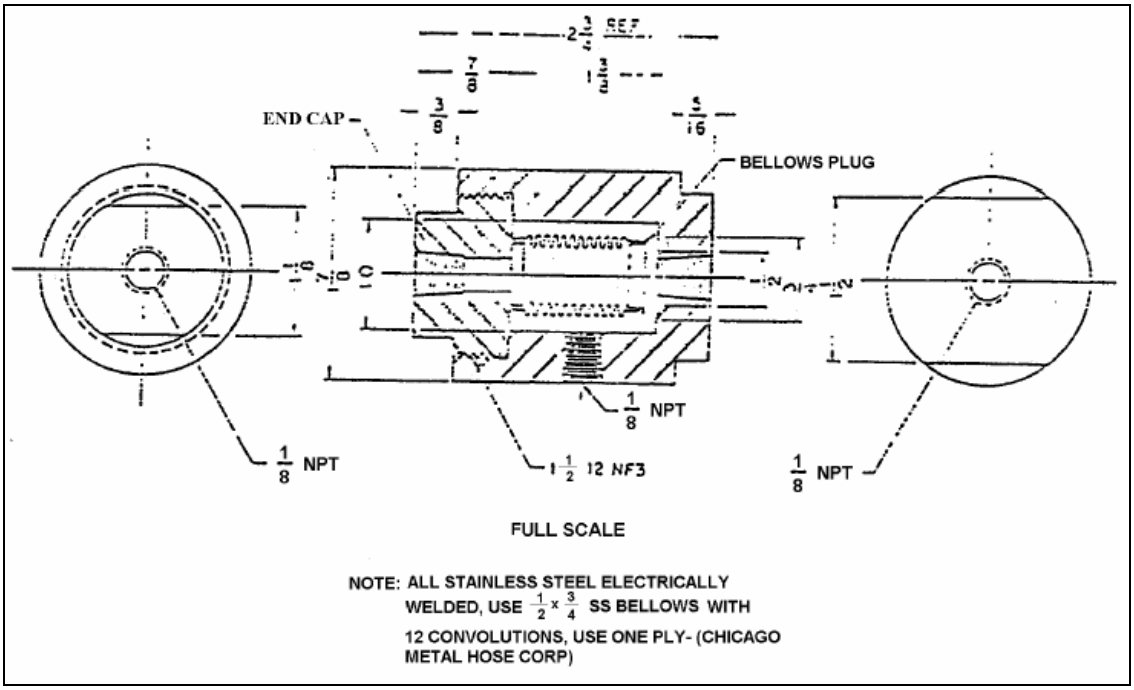

FIGURE 4. Pressure transmitter.

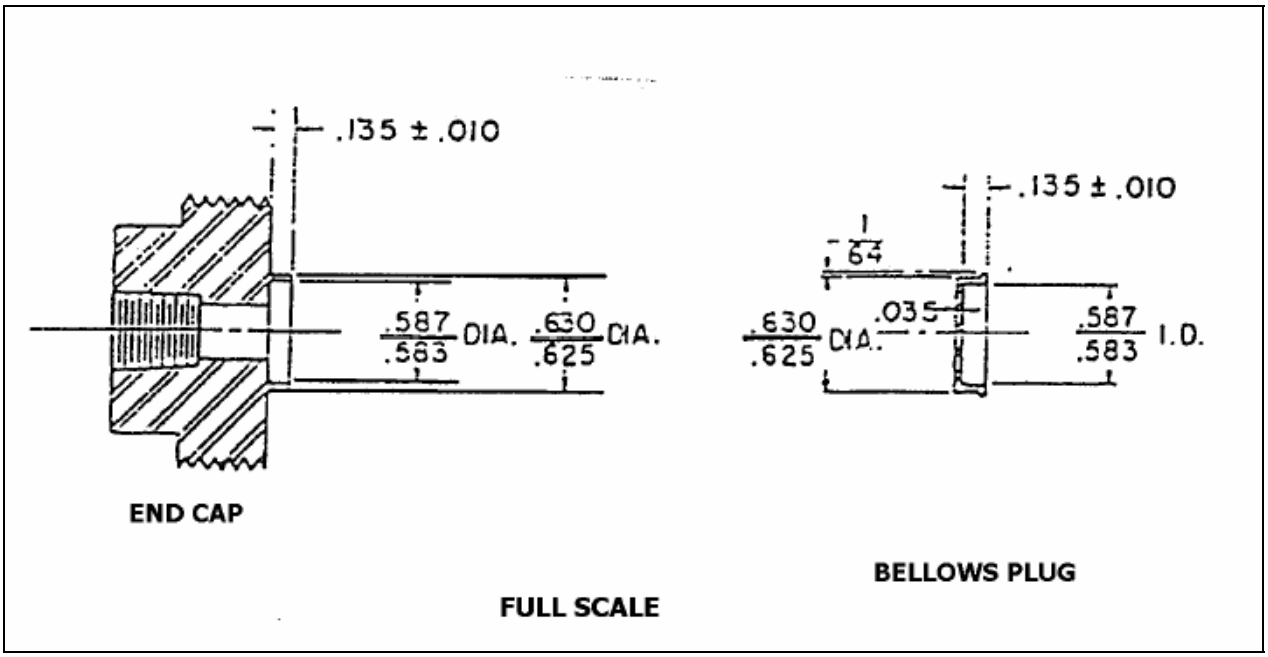

FIGURE 5. Pressure transmitter details.

Top

TEST INFORMATION SHEET

1. TYPE OF EXPLOSIVE: Liquid Propellants

2. TEST TITLE: Flash Point

a. Type of Test: Hazard Assessment/Sensitivity.

b. Description: This test is designed to measure the temperature where the sample will emit vapors that may be ignited by an open flame. The flash point is determined in an open cup tester. A test cup is filled to a specific level with the sample. The temperature of the sample is increased rapidly at first and then at a slow constant rate as the flash point is approached. At specific intervals, a small test flame is passed across the cup. The lowest temperature where the application of the test flame causes the vapors above the surface of the liquid to ignite is recorded as the flash point. To determine the fire point the test is continued until the application of the test flame causes the sample to ignite and burn for at least 5 seconds.

c. Information Requirements for Assessment: Temperature when a flash appears at any point on the surface of the sample is the observed flash point.

d. Typical Results: NOS 365, No flash to 75°C.

e. Repeatability and Reproducibility: Good

3. NATIONAL REFERENCES:

a. ASTM D92-90, Standard Test Method for Flash and Fire Points by Cleveland Open Cup. Philadelphia: American Society for Testing and Materials, 1990.

b. ASTM D93-90, Standard Test Methods for Flash Point by Pensky-Martens Closed Tester. Philadelphia: American Society for Testing and Materials, 1990.

Top

TEST DESCRIPTION

1. TYPE OF TEST: Thermal Stability (Constant Temperature) - Vacuum Thermal Stability (VTS)

2. PURPOSE: This test measures the stability of an explosive at an elevated temperature under vacuum.

3. BACKGROUND:

3.1 In this test, a weighed explosive sample in a measured evacuated volume is heated at a constant elevated temperature for a specified time. The gas pressure in the sample container is measured before, during, and after the test with an attached mercury manometer. The reported result is the volume of gas at standard temperature and pressure produced by the explosive sample. Sample size, container volume, glassware design, and test duration vary among the laboratories conducting the test depending on the purpose for which the test is conducted. Reference (a) provides the NATO-agreed standardized procedures and apparatus.

3.2 Duplicate or triplicate samples, prepared for each test, are heated at 100 ºC for 48 hours. (Reference (e) requires only 40 hours for propellants.) Staff members at some centers report that samples are heated for 1 hour and then the initial reading is taken. The tests are then run for 48 hours making the total heating time 49 hours.) Sample size is 5.00 ± 0.05 g for booster and main charge explosives and propellants, and 0.200 ± 0.001 g for primary explosives. Propellant samples are ground or rasped to approximately 12 mesh. All samples except solvent propellants should be dried at 65 ºC for 2 hours; solvent propellants should be dried at 60 to 65 ºC for 2 to 3 hours.

3.3 An advisory criterion of 2 ml of gas evolved per gram of explosive heated for 48 hours at 100 ºC applies for main charge and booster explosives. However, main charge explosives which will be subjected to higher temperatures in the application for which they are being qualified, must also be tested at higher temperatures

4. TEST ARRANGEMENT: Figure 1 shows one version of the glass heating container manometer apparatus for VTS measurements. The heating container is connected to the manometer by a ground joint sealed with mercury. This is convenient and can remain leak-free during measurements at 100 ºC. However, measurements above 200 ºC on thermally stable explosives require a one-piece version, consisting of glycerin and water (specific gravity 1.05 for 100 ºC test) or temperature controlled block (oven) such as described in references (c) and (d) and, briefly, in section 7 herein.

5. PROCEDURE:

5.1 Method 1:

5.1.1 The apparatus shown in figure 1 is first calibrated by determining the volume of the heating chamber by filling with mercury from a burette to the level at which the ground glass joint of the capillary tube will make contact with the mercury. (Some test centers report using distilled water in the heating chamber for calibration only). The volume of the capillary tube in ml/mm, symbol C, is determined by averaging the length occupied by a weighed sample of mercury (about 10 g) at three different positions:

$$C = W/DL$$

where:

C = volume of capillary in ml/mm
W = weight of mercury in g
D = density of mercury at test temperature in g/ml
L = average length of mercury column in mm

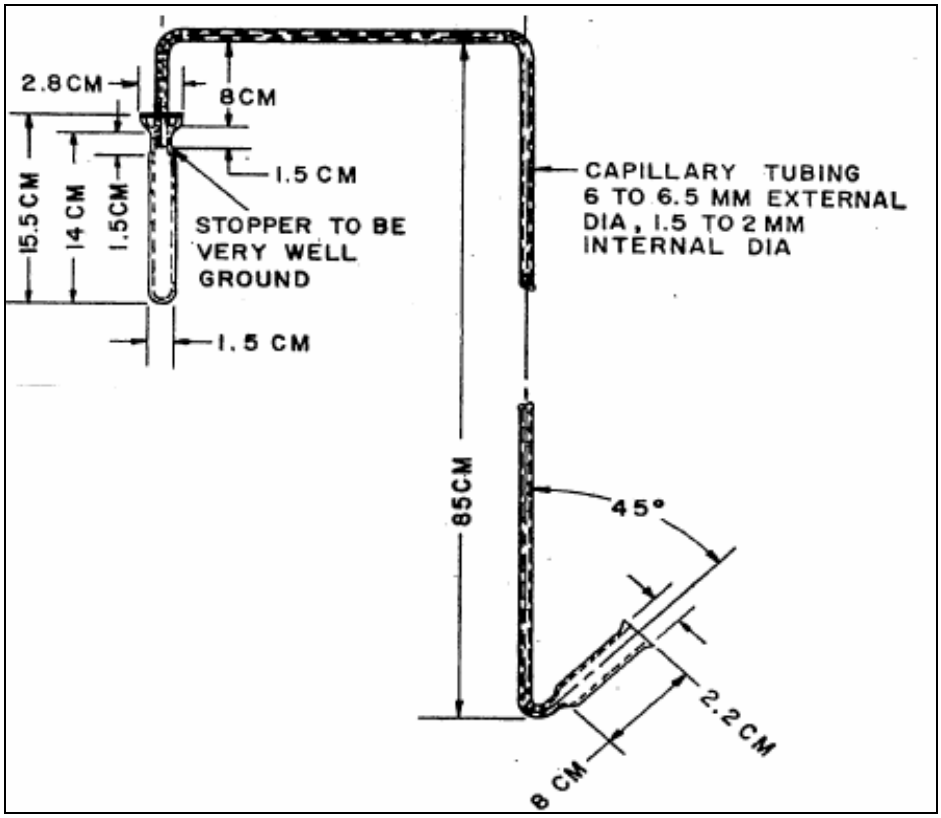

FIGURE 1. Vacuum thermal stability test apparatus.

5.1.2 A dried sample is then added to the heating chamber of the calibrated apparatus. The capillary tube is connected and sealed using a light film of petroleum jelly such as silicone stopcock grease. Press the tube up against the capillary. With the long section of the capillary in a vertical position, 7.0 ml of mercury is added to the lower cup, and the system is evacuated to a pressure of about 0.2 in. (5 mm) of mercury. The vacuum pump is disconnected and the mercury is allowed to enter the capillary. The vertical height of the mercury column minus the height of mercury in the cup is recorded as H_1. The room temperature is recorded as t_1, and P_1 is the barometric pressure in mm minus H_1. The heating chamber is placed in a constant temperature bath or block (oven), maintained at 100.0 ± 0.5 ºC for 48 hours (or 49 hours), then it is removed and allowed to cool to room temperature. H is defined as the height of mercury in the capillary minus the cup; P is the barometric pressure minus H; and t is the room temperature. The volume of gas, at standard conditions, evolved by the sample is then calculated with the following formula:

$$V = [A + C\,(B - H)]\,\frac{273P}{760\,(273 + t)} - [A + C\,(B_1 - H_1)]\,\frac{273P_1}{760\,(273 + t_1)}$$

where:

A = the volume of the tube minus the volume of the sample

B_1 = the total length of the capillary tube minus the measured heights to which 7.0 ml of mercury rises when added to the lower cup 1 inch (about 25 mm)

B = the total capillary length minus the height of the mercury column at the end of test.

The volume of gas per gram (VTS value) is V divided by the weight of the sample in grams.

5.2 Method 2:

5.2.1 The procedure developed for screening explosives at the Naval Surface Warfare Center (NSWC) is somewhat different and more versatile. When the one-piece glass apparatus and a specially designed heating block (oven) are used, measurements have been made at temperatures as high as 300 ºC; however, 400 ºC should present no problem. The main difference is that the heating chamber is smaller (about 10 ml) and sealed to the manometer. The heated volume is measured as the volume of the 1.0 cm outside diameter sample tube plus the capillary out to a reference mark 10.2 cm from the center of the sample tube. This volume is determined by adding water from a burette until the water fills the capillary to the reference mark. The vertical length of the capillary is about 92 cm long with a reference mark 28 cm from the bottom

5.2.2 Although the NSWC apparatus is also used for standard 100 ºC tests, it was developed for high temperature evaluation of thermally stable explosives.

5.3 Method 3: This method is used for thermally stable materials. The most common test, 260 ºC for 2 hours, is conducted as follows:

5.3.1 An accurately weighed, dried 0.2 g sample is transferred to the heating chamber of a calibrated apparatus, which is then placed behind a safety shield and sealed off with a hand-held torch just above the junction with the capillary. The system is evacuated to a pressure of 0.04 inch (0.1 cm) or less with a pump attached to the lower cup. Then 4 ml of mercury is added, atmospheric pressure returned, and the pump is disconnected.

5.3.2 The height of the mercury in the capillary is measured, relative to the reference mark, and the apparatus set aside as a check for leaks. Room temperature and barometric pressure readings are taken. The sample chamber is placed in the 260 ºC heating block, and the mercury height is measured. This measurement is repeated after 20 minutes and again after an additional 2 hours (140 minutes total). Although this concludes the usual test, samples are often left in the heating block to monitor further decomposition.

5.3.3 The first 20 minutes of the test, referred to as the 20-minute surge, is usually excluded from the VTS result as not indicative of the stability of the test material. Eleven minutes are required for the sample to reach the test temperature. The system degasses, and occluded or strongly absorbed solvents are evolved. However, the gas volume of this surge is usually also reported.

5.3.4 The VTS gas evolution volume (corrected to 0 ºC and 760 mm pressure) is calculated as follows:

$$V = \frac{(273)(Z)(\Delta P)}{(533)\ (760)\ (W)\ (t)}$$

where:

V = ml of gas/gram of sample/hour at 260ºC
Z = volume of hot zone minus volume of sample in ml
ΔP = pressure change (change of mercury height) in mm
W = sample weight in g
t = time in hours

5.4 The VTS test can be run at any temperature appropriate to the explosive application. It can also be used to determine the compatibility of materials in contact in proposed military applications by comparing the gas evolved by an appropriate mixture with that evolved by each of the separate components.

5.5 If excess gassing occurs at 100 ºC or if 100 ºC greatly exceeds intended operating requirements, a lower temperature may be used. Commonly used test conditions for various types of materials are given in Annex A of reference (f).

5.6 Reference (a) states that compatibility of materials that decompose too rapidly at 100 ºC may be tested at 80 ºC for 240 hours.

6. RESULTS AND DATA:

6.1 The following information shall be reported for this test:

i. which of the three variations given in Method U.S. 202.01.001 was used.
ii. period of time for which the sample is heated.
iii. temperature at which the test is conducted.
iv. the volume of the sample chamber.
v. statement of whether an initial surge volume of gas was excluded from the calculations; if it was, the time period covering the surge and the surge gas volume must also be reported.
vi. number of replicate samples tested.
vii. results for candidate explosive.
viii. results for reference explosives.

6.2 The results shall be reported for each sample tested as the volume at 760 mm of pressure and 0 ºC of gas evolved per unit mass of the sample. If more than one sample is tested, the average of the replicate determinations shall also be reported.

7. SUPPLEMENTARY INFORMATION:

7.1 The design, construction, and use of a heating block for tests at any temperature between 35 and 400 ºC is described in references (b) and (c). Significant design features include sample wells in an aluminum block which maintain both the sample chamber and part of the horizontal capillary at controlled temperatures. Separate controls and electric heaters are used so that when sublimation of the sample is a problem, the top and capillary portions of the hot zone can be 5 to 10 ºC warmer than the rest. The temperature control is designed to shift from low to high power settings (instead of off and on) to reduce temperature fluctuations. The high and low power settings are set to come to equilibrium a few degrees above and below the test temperature, so that during control, the high power is on 50% of the time. The block is arranged symmetrically to contain several samples, but the top is designed so that the insulation is removed only over the position where an apparatus is being inserted or removed.

7.2 Before the sample heating chambers containing explosive samples are sealed, they are lowered into a length of thick-walled steel pipe capped at both ends. The upper cap contains a hole just large enough to accommodate the glass sample tube. Liquid or tacky solid samples must be placed in the bottom of the sample tube with none adhering to upper walls. This is accomplished by weighing them into smaller tubes of known wall volume that are then lowered into the heating container.

7.3 The volume of gas evolved in this test is valid as a measure of the thermal stability of the material being tested only insofar as the gases evolved are the products of the decomposition of the test material. Independent determination that this is the case may be obtained by subjected the evolved gases to analysis by IR spectrometry, GC or GC/MS, or another method that provides information about the identity of the gases.

7.4 There is evidence that, for some explosives, the VTS result depends on the ratio of the sample weight and the volume of the heated chamber. In these cases, the VTS value generally (but not always) decreases as the ratio increases. The effect seems to result from two competing processes: solid state

when possible, VTS values should be compared with others obtained under similar conditions. Values of common explosives are given in Table I.

8. NATIONAL REFERENCES:

a. NATO STANAG 4147, Chemical Compatibility of Ammunition Components with Explosives and Propellants (Non-Nuclear Applications).
b. Rosen, A. H. and Simmons, H. T., Improved Apparatus and Technique for the Measurement of the Vacuum Stability of Explosives at Elevated Temperatures, NAVORD Report 6629, 12 Mar 1959, Naval Surface Warfare Center, White Oak, Silver Spring, MD 20903-5000.
c. Simmons, H. T., The Vacuum Thermal Stability Test for Explosives, NOLTR 70-142, 28 Oct1970, Naval Surface Warfare Center, White Oak, Silver Spring, MD 20903-5000.
d. MIL-STD-650, Explosive: Sampling, Inspection and Testing, Method 503.1.1.
e. MIL-STD-286C, Propellants, Solid: Sampling, Examination and Testing, Method 403.1.3.
f. NATO STANAG 4556, Explosives: Vacuum Stability Test.

TABLE I. Common explosive values.

Explosive	Temperature (ºC)	Test Duration (hrs)	VTS Value (ml/g)
COMP B	100	48	0.30
DATB	200	48	0.11
DATB	230	2	0.21
DIPAM	260	2	2.68
HMX	100	48	0.50
HMX	260	2	0.34
PETN	100	48	0.21
RDX	100	48	0.12
TETRYL	100	48	0.24
TNT	100	48	0.10

Top

U.S. 202.01.002

TEST INFORMATION SHEET

1. TYPE OF EXPLOSIVE: High Explosives, Propellant, and Pyrotechnics

2. TEST TITLE: Variable Confinement Cook-Off (VCCT) Test

a. Type of Test: Hazard Assessment/Sensitivity/ Thermal Detonability.

b. Description: This test is used to study the explosiveness of solid explosive materials in fast and slow cook-off condition. A sample of explosive, confined in an aluminum liner within a steel tube, is heated by means of electrical windings. The apparatus consists of an aluminum liner, one from a series of increasing wall thickness steel tubes, heating bands, thermocouples, steel spacer washers, steel end plates and retaining bolts. The thickness of the aluminum sleeve is 2.5 mm and the thickness of the steel tube can be 0.375 to 3 mm in 0.375 mm increments. Two thermocouples are fitted, one in each of two diametrically opposing grooves in the aluminum sleeve. Either two mica-insulated band heaters or an insulated nichrome wire winding are located on the steel tube, spacer washers are added to each end and the assembly is located in recesses between steel witness plates. The retaining bolts are evenly tightened to a torque of 40.7 +/- 4Nm.

c. Information Requirements for Assessment: The degree of tube fragmentation is used to determine the reaction category and the objective of the test is to determine the median tube thickness just resulting in a deflagration reaction rather than burning.

d. Typical Results: Five levels of severity of reaction are observed in this test:

(1) Burning: The steel sleeve is recovered in one piece. The aluminum sleeve is usually recovered in one or two pieces. Witness plates exhibit no deformation. Retaining bolts usually remain intact, although in some cases they may be bowed.
(2) Deflagration: The steel sleeve is recovered in one or two pieces. The aluminum sleeve usually fragments into large pieces. Witness plates exhibit slight deformation. Retaining bolts fail in shear.
(3) Explosion: Both steel and aluminum sleeves fragment into several large pieces. Witness plates exhibit some deformation.
(4) Partial detonation: Steel and aluminum sleeves fragment into both large and small pieces. Witness plates exhibit severe deformation.
(5) Detonation: Steel and aluminum sleeves fragment into very small pieces. Witness plates exhibit severe damage.

CH-6 repeatedly cooks-off with a partial detonation (Level 4). Tetryl repeatedly cooks-off with high order (Level 5).

e. Repeatability and Reproducibility: The severity of the reactions is repeatable and reproducible.

3. NATIONAL REFERENCES:

a. STANAG 4491 Edition 1, Explosives, Thermal Sensitiveness and Explosiveness Tests.

Top

TEST INFORMATION SHEET

1. TYPE OF EXPLOSIVE: High Explosives, Propellant, and Pyrotechnics

2. TEST TITLE: Thermal Detonability (Fast Cook-Off) - NAWC (China Lake) Method

   a. Type of Test: Hazard Assessment/Sensitivity.

   b. Description: The test fixture, a super small-scale cook-off bomb (SSCB), consists of a steel tube 2.8 cm 0D/2.3 cm ID X 7.6 cm long (~1.1" OD/O.9" ID X 3" long) spot welded (4 pts) to a witness plate 6 cm diameter x 1 cm thick (3" diameter X 3/8" thick). A similar top plate is used and bolted to the tube-witness plate for explosive confinement. An internal aluminum sleeve 2.3 cm OD/2.0 cm ID X 7.6 cm long (~0.9" OD/O.8" ID X 3" long) is used to spread input heat evenly and temperature measurement is made with a thermocouple. The explosive material is cast, pressed, or cured in steel tubes 2 cm OD/1.5 cm ID X 3.2 cm long (0.8" OD/O.6" ID X 1.25" long). Each tube contains about 10 grams of explosive and two steel tubes are used per test. This allows a 1.3 cm (0.5-inch) void area for thermal expansion. The outer steel tube is heated with two, 125-watt band heaters. With 220 VAC applied, the heating rate is ~1°C/sec and is ~0.2^{o}C/sec with 110 VAC. The higher heating rate is similar to a heavy steel wall 1.3 cm (~0.5 inch) munition in a fuel fire, the lower heating rate is similar to an area that is not in a direct heat path from the fuel fire, i.e., fuze cup, thermally protected case, etc.

   c. Information Requirements for Assessment: This test is used to determine the cook-off temperature and reaction of a confined explosive. The time-temperature plot is used to determine the cook-off temperature at a given heating rate. The body fragments and witness plate are used to assess the severity of the reaction.

   d. Typical Results: The severity of the cook-off reaction is assessed in the following manner and is listed below:

Outer Tube	Witness Plate	Cook-Off Reaction
Intact/Split	Dent $\leq$ 1.3 cm (0.05")	Burning
1-4 Pieces	Dent $\leq$ 1.3 cm (0.05")	Deflagration
Many Pieces	Dent $\leq$ 1.3 cm (0.05")	Explosion
Many Pieces	Nearly Punched	Partial Detonation
Small Pieces	Punched Hole	Detonation

   The severity of the cook-off reaction is dependent on the heating rate. CH-6 booster explosive yields a detonation. PBXC-123 will yield a burning reaction, which is similar to the cook-off reaction of this explosive in a warhead.

   e. Repeatability and Reproducibility: The tests have been repeatable in regard to thermal response and reaction.

3. NATIONAL REFERENCES:

   a. Pakulak, J. and Cragin, S., National Weapons Center TP-6414, July 1983.

Top

TEST INFORMATION SHEET

1. TYPE OF EXPLOSIVE: High Explosives, Propellant, and Pyrotechnics

2. TEST TITLE: Explosion Temperature.

a. Type of Test: Hazard Assessment/Sensitivity.

b. Description: Heat causes the decomposition of an explosive at a rate that varies with temperature. Almost all explosives are characterized by a critical temperature, below which the rate of decomposition is so small that it is negligible. If a small mass of an explosive is suddenly subjected to a high ambient temperature, an induction or incubation period ensues during which the explosive absorbs heat. If the ambient temperature is sufficiently high, decomposition of part of the explosive liberates heat and causes acceleration of the increase in temperature of the remaining explosive. When the temperature reaches a certain value characteristic of the explosive, the rate-of-decomposition value becomes so great that explosion of the remaining material takes place. The temperature of the products of explosion is much greater than that developed during the period prior to slow decomposition. If the explosion is brought about at the end of a column of explosive, self-propagating detonation of the column can ensue.

In this test, a blasting cap containing the explosive is immersed to a fixed depth in a bath of molten Woods' metal. The time of immersion required to cause flashing or explosion is noted. The temperature of the bath is varied and a number of tests are made in order to produce smoke, fume, flashes or explosions over a range of approximately two to ten seconds. Visible signs of evolution of smoke, fumes, etc., are recorded. A pressure-time curve is constructed in order to finalize the temperature required to cause flashing or explosions in five seconds.

c. Information Requirements for Assessment: To determine the relative sensitivity of booster and main charge explosives to heat.

d. Typical Results:

e. Repeatability and Reproducibility:

3. NATIONAL REFERENCES:

a. Clear, A. J., "Standard Laboratory Procedures for Determining Sensitivity, Brisance and Stability of Explosives", PA Technical Report 3278, Rev. 1, April 1970.

Top

TEST INFORMATION SHEET

1. TYPE OF EXPLOSIVE: Primary High Explosives

2. TEST TITLE: Cook-Off Temperature Determination Test.

   a. Type of Test: Hazard Assessment/Sensitivity.

   b. Description: A 5 mg specimen of the candidate explosive is placed on a hot plate, with an imbedded temperature sensor well, having a proportional heating control of $\pm$ 2.5 ^{o}C or better. The measurements start at 50 ^{o}C and the temperature is raised in 10 ^{o}C increments until ignition is observed. The test is repeated until 5 ignitions occur out of 5 trials.

   c. Information Requirements for Assessment: This test determines the thermal sensitivity of primary explosives.

   d. Typical Results:

   e. Repeatability and Reproducibility: Good

3. NATIONAL REFERENCES:

   a. NAVORD OD 44811 of 1 January 1972. pages. 1-20

Top

U.S. 202.01.006

TEST DESCRIPTION

1. TYPE OF TEST: Ignition sensitivity - Hot-wire Ignition Test

2. PURPOSE: This test determines the ignition sensitivity of an explosive material in contact with an electrically energized (hot) wire.

3. BACKGROUND: None

4. TEST ARRANGEMENT: The explosive material particle size for this test must be small compared to the diameter of the ignition wire. Therefore, only explosive passing through a 325-mesh sieve shall be used. (There is an exception for extrudable non-curing explosives which shall be extruded directly into the charge holder and onto the bridge wire.) If a minimum of 90% of the explosive as submitted does not pass through a 325-mesh sieve, a representative sample shall be taken and milled. Milling should be conducted under a non-combustible wetting agent that will neither appreciably dissolve nor react with the explosive. The milling shall be accomplished using stainless steel balls or flint pebbles. Milling shall be continued until at least 98% of the sample passes through the 325-mesh sieve. Only that portion passing through the 325-mesh sieve shall be used for this test. The explosive shall be dried to a constant weight at 55 ºC before being loaded in accordance with 5.1 below.

5. PROCEDURE:

5.1 Loading procedure. Bridge 40 plug subassemblies, drawing 457454 (reference (a)), with a 2-mil diameter tungsten wire flush with the plug surface (see Figure 1). Firmly attach the spacer, drawing 652246 (reference (b)), to the bridged plug subassembly. Twenty bridged plug subassemblies each shall be loaded with the dry explosive prepared in accordance with section 4 above by pressing the explosive flush to within ± 0.010 inch of the spacer at pressures of 4,000 and 20,000 psi, respectively.

5.2 Firing procedure. Each loaded unit shall be tested with an ohmmeter prior to firing to determine that the tungsten bridge wire is intact. The test unit shall then be placed explosive-side down on an aluminum witness plate, 1.5 x 1.5 x 0.5-inch, and fired in a safety chamber. Firing voltage shall be supplied by a fully charged 12-volt lead-acid automotive storage battery of at least 45 ampere-hours capacity. The battery shall be connected to the test unit by a plunger-type mercury relay (Macke electrical devices or equivalent) through appropriate wiring and safety interlocks. The total circuit resistance, including the relay, wiring, and interlocks, but not the battery or test unit, shall not exceed 0.4 ohm. Testing shall continue until all 40 samples (only 20 samples are necessary for extrudable non-curing explosives) are tested, unless an individual test sample does not meet the requirements of section 6 below.

6. RESULTS AND DATA: The candidate explosive shall be reported to have passed the hot-wire ignition test if none of the 40 samples show any evidence of reaction in the form of visible, audible, or measurable external change to the test explosive, the test unit, or the witness plate. However, the tungsten wire shall have been burned out as determined by an ohmmeter test.

7. SUPPLEMENTARY INFORMATION:

8. NATIONAL REFERENCES:

a. Naval Sea Systems Command (CAGE Code 10001) drawing 457454 Plug Subassembly.
b. Naval Sea Systems Command (CAGE Code 10001) drawing 652246 Spacer.

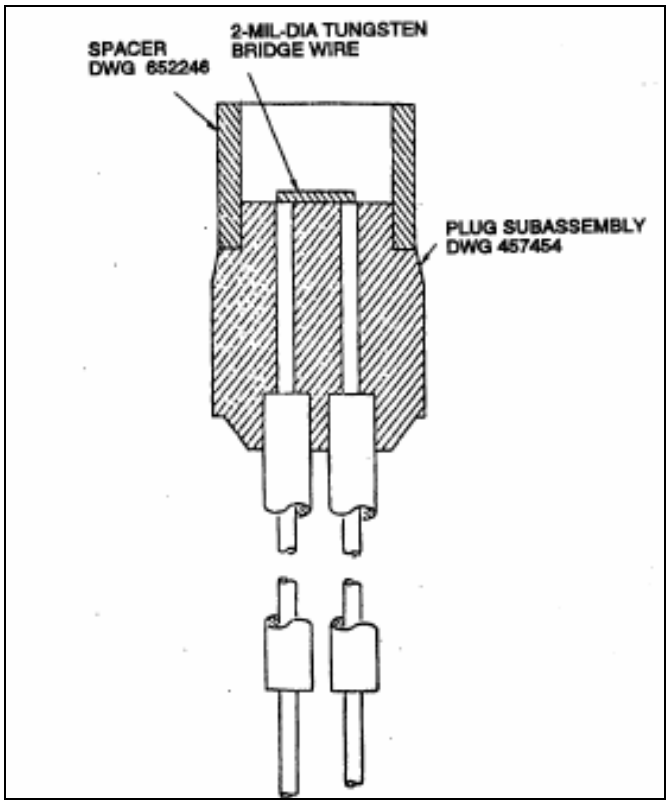

FIGURE 1. Hot-wire ignition arrangement.

Top

U.S. 202.01.007

TEST DESCRIPTION

1. TYPE OF TEST: Thermal stability (variable temperature) - Differential Thermal Analysis (DTA)

2. PURPOSE: The test is used to evaluate the behavior of energetic materials when subjected to a temperature rise. Characteristics displayed on thermograms can be used to monitor samples in comparison to controls and to examine if changes have occurred in a sample that may affect stability. Results provide onset temperature and peak maxima of any endothermic or exothermic events.

3. BACKGROUND: DTA records the difference in temperature between a substance and a thermally inert reference material when both are subjected to the same thermal conditions. Sample and reference holders are each fitted with their own temperature sensing device, usually thermocouples connected in opposition. Sample and reference holders are fitted in a heat sink, i.e., a metal block, which is surrounded by a heat source that can be programmed to raise the temperature of both the sample and reference material at a predetermined rate.

3.1 Principle of operation: If, upon heating, there are no transitions or reactions occurring within the test sample, the difference in temperature between the sample and reference (ΔT) is effectively zero. Temperature differences between the sample and reference are brought about by either endothermic or exothermic transitions or reactions within the sample pan. During "endothermic transitions," the sample undergoes "isothermal arrests" whereby its temperature remains relatively constant during the transition although there is an input of heat into the sample during this transition. The reference temperature continues to rise at the predetermined rate over this period. Hence a differential temperature exists between sample and reference with the sample lagging the reference.

3.2 Conversely, during exothermic reactions, the heat evolved from the sample gives rise to a temperature difference between the sample and reference where the ΔT signal has the opposite polarity. These changes lead to a departure from the $\Delta T = 0$ baseline during transitions resulting in a peak in the output signal. When the transition is over, the sample "catches up" with the reference and the signal returns to the steady state as was observed before the transition. A gradual return to the baseline is observed due to the relatively low thermal conductivity of the sample crucible material. When the technique is used in conjunction with a photo detector system, the ignition temperature may also be recorded.

4. TEST ARRANGEMENT:

4.1 Apparatus:

4.1.1 Some Differential Thermal Analyzers are capable of heating rates up to 50 ºC/min, although a typical heating rate for this experiment is 10 ºC/min. The analyzer used in this method should automatically record the differential temperature between the sample and reference materials. It should have an upper temperature capability of at least 500 ºC.

4.1.2 Sample crucibles are required which should be manufactured from materials that are inert to the material under test. They should be large enough to be able to accommodate up to 30 mg of sample and be robust enough to withstand the mechanical forces and high temperatures encountered during ignition reactions. Materials such as alumina and platinum are generally suitable. Alumina is the preferred material since the crucibles are readily cleaned by boiling in concentrated acids.

4.1.3 Purge gas supply and an associated flow controller.

4.1.4 Inert reference material which is not thermally active over the temperature range to be used.

For most applications, alumina has been found to be suitable.

4.1.5 Balance capable of measuring to an accuracy of ±0.01 mg.

4.1.6 Additional apparatus required for temperature of ignition studies

a. Dead weight press (1 kg) with a ram diameter slightly smaller than the internal diameter of the sample crucible
b. Photodetector and associated signal amplification circuitry

4.2 Calibration: Since a DTA instrument is used only semi-quantatively for measurement of endothermic and exothermic transitions, accurate calibration of the heat of transition reaction is not generally necessary. However, if heat of transition/reaction is to be measured, calibration can be achieved through the measurement of the heat of fusion of standard reference materials.

4.2.1 Because of the robustness of construction and the relatively low thermal conductivity of the sample crucible materials, temperature calibration to within ±2% is considered acceptable. Generally, calibration shall be performed at two points using standard reference materials with melting point onsets close to the limits of the temperature range of interest. Calibration should be carried out using the same type of crucible, heating rate, purge gas, and purge gas flow rates that will be used for test measurements.

4.2.2 Typical standard reference materials used for temperature and enthalpy calibration are shown in the table below:

Material	Melting Point (ºC)	Heat of Fusion (J/g)
Indium	156.6	28.42
Zinc	419.5	108.0
Aluminum	660.2	397.0

5. PROCEDURE:

5.1 Sample preparation: Samples should be representative of the material in the final form anticipated for service use. Cast cure materials shall be fully cured. Powders may be consolidated to a density similar to that proposed for a final configuration if deemed necessary to achieve good contact between the sample and the crucible.

5.2 The energetic material being evaluated should be weighed accurately and placed in one sample crucible while the reference material should be placed in another. These should then be loaded into the instrument. Reference (a) provides recommended sample sizes for different types of explosive materials. There should be intimate contact between the sample or reference material and the sensors.

5.3 The sample chamber should be purged with an appropriate gas and the flow rate recorded. If, however, temperature of ignition studies are being performed, the experiment is generally conducted in a static air environment
.
5.4 The sample is then heated at the chosen heating rate over the temperature range of interest. Reference (a) provides recommended heating rates for different types of explosive materials. A thermogram is produced showing heat flow versus temperature. The evaluation of the curve associated

with the exothermic event may require a different approach if the curve has multiple peaks or peaks with complex structure. The temperature associated with all peaks should be reported.

6. RESULTS AND DATA:

6.1 The following information shall be reported for this test:

a. instrument
b. heating
c. purge gas and flow rate
d. sample
e. method of loading into sample
f. type of sample pan used (material of construction; open or closed; crimped or uncrimped;lid bulged up or down; etc)
g. atmosphere in which pan was prepared and sealed
h. thermogram
i. onset temperatures, peak temperatures, and temperature at which the trace returns to the baseline for all endotherms and exotherms.

7. SUPPLEMENTARY INFORMATION:

8. REFERENCES:

a. NATO STANAG 4515, Thermal Characterization of Explosives.

b. ASTM E537-98, Standard Test Method for Assessing the Thermal Stability of Chemicals by Methods of Differential Thermal Analysis, Philadelphia: American Society for Testing and Materials, 1998.

Top

TEST DESCRIPTION

1. TYPE OF TEST: Thermal Stability - Thermogravimetric Analysis (TGA)

2. PURPOSE: This test is used primarily to determine the weight loss (or gain) associated with an energetic material when it is subjected to isothermal conditions or increasing temperature in a flowing inert or oxidizing atmosphere. Kinetics parameters can be obtained from TGA experiments.

3. BACKGROUND: Thermogravimetric analysis measures the change in weight of a test sample as a function of temperature and time. The technique can be useful in distinguishing between phase changes (solid-state, melting) and weight changes resulting from chemical reactions (thermal degradation, metal oxidation, etc.). Data acquired from this technique can be more useful if used in conjunction with other techniques, such as DTA, DSC, FTIR, i.e., TGA/DSC on the same sample.

4. TEST ARRANGEMENT:

4.1. Apparatus:

a. Thermogravimetric analyzer capable of heating rates of up to 20 ºC/minute, with a weighing accuracy of ± 0.01 mg and an automatic recording capability for measuring the sample weight loss/gain as a function of temperature.
b. Sample crucibles manufactured from a material that is chemically inert to the material under test. Typical materials of construction are aluminum and platinum.
c. Purge gas supply (usually nitrogen, argon or helium) and an associated flow controller. Argon is recommended, since nitrogen can react with some metal surfaces.

5. PROCEDURE:

5.1. Sample preparation: Samples should be representative of the material in the final form anticipated for service use. Cast-cured materials shall be fully cured. Powders can be used as such or consolidated to a density similar to that proposed for a final application.

5.2. Temperature calibration shall be performed by a procedure described by the equipment manufacturer.

5.3. The sample chamber is purged with an inert gas at all times. The flow rate can be adjusted for periods when the instrument is not in use.

5.4. The test sample is placed in the sample crucible and the weight recorded.

5.5. The heating rate (dynamic experiment) shall be determined by the objective of the experiment. Some energetic materials are volatile and will volatilize from the sample pan during this test, sometimes prior to reaching the melting temperature

6. RESULTS AND DATA:

6.1. The following information shall be reported for this test:
a. instrument used to conduct the test
b. calibration standards used
c. gas used for purging
d. gas flow rate

e. heating
f. material of construction of crucible
g. weight losses and gains between start and end of reactions, as percentages
h. physical processes associated with weight loss steps, if possible, e.g.,
   i. loss of volatile matter
   ii. decomposition
i. derivative weight loss trace

6.2. The derivative weight loss trace is a measure of the weight loss as a function of time/temperature and is characteristic of the material or composition. It generally consists of a series of peaks, each corresponding to a weight loss or gain step. It can be used as a thermogravimetric fingerprint for characterization purposes.

7. SUPPLEMENTARY INFORMATION:

8. REFERENCES:

a. NATO STANAG 4515 Edition 1, Thermal Characterization of Explosives.

b. ASTM E1641-99, Standard Test Method for Decomposition Kinetics by Thermogravimetry, Philadelphia: American Society for Testing and Materials, 2000.

Top

TEST INFORMATION SHEET

1. TYPE OF EXPLOSIVE: High Explosives, Propellant, and Pyrotechnics

2. TEST TITLE: 100 ^{o}C Heat Test

   a. Type of Test: Hazard Assessment/Sensitivity.

   b. Description: This test is performed to measure the resistance of explosives to decomposition by heat. The end points used are loss in weight of the sample following exposure at the specified condition, and noting if ignition or explosion occurs following exposure in an oven maintained at 100 ^{o}C for a period of 100 hours.

   c. Information Requirements for Assessment: This method is used for determining the stability of high explosives by subjecting them to 100 ^{o}C at atmospheric pressure.

   d. Typical Results: Not available

   e. Repeatability and Reproducibility: Should be good for test performed under the same conditions.

3. NATIONAL REFERENCES:

   a. MIL-STD-650, dated 3 August 1962.

   b. Clear, A. J., "Standard Laboratory Procedures for Determining Sensitivity, Brisance and Stability of Explosives", Picatinny Arsenal Technical Report 3278, Rev. 1, April 1970, Dover N.J.

Top

TEST DESCRIPTION

1. TYPE OF TEST: Exudation Characteristics

2. PURPOSE: To measure the exudation of liquid impurities or plasticizers from energetic materials.

3. BACKGROUND: Explosives containing liquids as impurities or plasticizers may develop exudation problems during storage. For example, warheads containing TNT-based explosives may require pads to absorb the mono and dinitrotoluenes impurities or the eutectics formed that can exude from the explosive charge. These exudates can migrate into fuze wells or other areas and cause problems during storage or use. Munitions loaded with explosives containing liquid plasticizers may also experienced exudation problems when the plasticizer migrates from the charge.

4. TEST ARRANGEMENT:

4.1 The test apparatus consists of an aluminum sleeve (machined from 7075-T6), as shown in Figure 1, with a 26.4mm (1.04 inch) I.D. and 51.8mm (2.04 inch) O.D. by 127.0mm (5.0 inch) long. The sleeve is closed off and sealed at each end by Velumoid or equivalent automotive gaskets, 50.8mm (2.0 inch) diameter by 0.5mm (0.20 inch) thick, and aluminum discs (machined from 7075-T6), 50.8mm (2.0 inch) diameter by 12.7mm (0.5 inch) thick. The aluminum discs are attached to the sleeve by four ¼"-20, ½" long socket head cap screws equally spaced around a 1.5" diameter bolt circle.

4.2 The test sample is wrapped in a sheet of Watman No. 1 Qualitative or equivalent filter paper, 127.0 mm (5.0 inch) wide by 161.9mm (6.375 inch) long. Four discs, 25.4 mm (1.0 inch) in diameter, are cut from the filter paper and placed at each end of the test sample after it is wrapped and inserted into the test fixture.

4.3 A conditioning chamber which operates at the specified temperature and suitable for energetic materials is used to conduct this test.

4.4 The test samples are cylinders 25.4 ± 0.0254 mm (1.0 ± 0.001 inch) diameter by 125.73 ± 0.0508 mm (4.950 ± 0.002 inches) long. The test sample may be made up of stacked pellets when pressed explosives are tested. Three test samples are required.

5. PROCEDURE:

5.1 Each test sample is weighed to the nearest 0.0001 gram using an analytical balance, and the mass of each sample is recorded. The filter paper sheets and discs (one sheet and eight discs for each test sample) are placed in a desiccator at room temperature until constant weight is achieved. The filter paper sheets and discs are weighed to the nearest 0.0001 gram using an analytical balance and mass recorded.

5.2 After the weights have been recorded, one sheet of filter paper is removed from the desiccator and tightly wrapped around test sample. The wrapped test sample is then tightly inserted into the aluminum sleeve. Four filter paper discs followed by a Velumoid gasket are placed at each open end of the aluminum sleeve; the aluminum cover discs are then bolted snugly to each end of the sleeve to seal (Figure 1). This procedure is repeated for each test sample.

5.3 The test fixtures are placed in a conditioning chamber at 60 ± 0.5 ºC (140 ± 1 ºF) for a period of 320 hours. A continuous recording is made of the chamber temperature. At the conclusion of 320 hours the test fixtures are removed from the conditioning chamber, insulated, cooled to room temperature and

disassembled. As an alternative, the samples may cycled be under 60 psi pressure for 30 cycles between - 54 and + 60 ºC (- 65 and +140 ºF).

5.4 For each test sample, the filter paper wrap and discs are placed in a desiccator at room temperature until constant weight is achieved. The filter paper sheets and discs are reweighed to the nearest 0.0001 gram using an analytical balance and mass recorded. The test samples are reweighed to the nearest 0.0001 gram using an analytical balance and mass recorded.

5.5 The loss in weight for each test sample is recorded as the amount of exudate. The percent exudation is obtained by dividing the amount of exudate by the original sample weight and multiplying by 100. The gain in weight of the filter paper sheet and discs for each test sample is used to confirm the exudate value. The advisory passing criterion is that the amount of exudates should be no more than 0.1%.

6. RESULTS AND DATA:

6.1 The following information shall be recorded from this test

a. Type of conditioning chamber used to conduct the test (programmable, manual
b. Method used to prepare the test samples (pressing, casting
c. Initial mass, length, diameter and percent of theoretical maximum density of each test sample
d. Initial mass of the filter paper sheets and disks
e. Time the samples were conditioned at temperature, including temperature record of conditioning chamber
f. Final mass of the test samples after 320 hours at temperature
g. Final mass of the filter paper sheets and discs for each test sample
h. Photographs of the test samples, filter paper and discs after disassembly of the test fixtures
i. Description of the appearance of the test samples, filter paper sheets and discs after the conclusion of the test (discoloration, blotches …)
j. Loss in weight for each test sample (amount of exudate)
k. The percent exudation values for each test sample based on weight loss of samples
l. Weight gain in the filter paper sheets and discs for each test sample
m. The percent exudation for each test sample based on weight gain in filter paper sheets and disks
n. Average exudation of the three test samples

7. SUPPLEMENTARY INFORMATION:

8. NATIONAL REFERENCES:

a. Voigt, H.W., Exudation Test for TNT Explosive Under Confinement: Exudation Control and Proposed Standards, ARLCD-TR-83004, Picatinny Arsenal, NJ, February 1983.

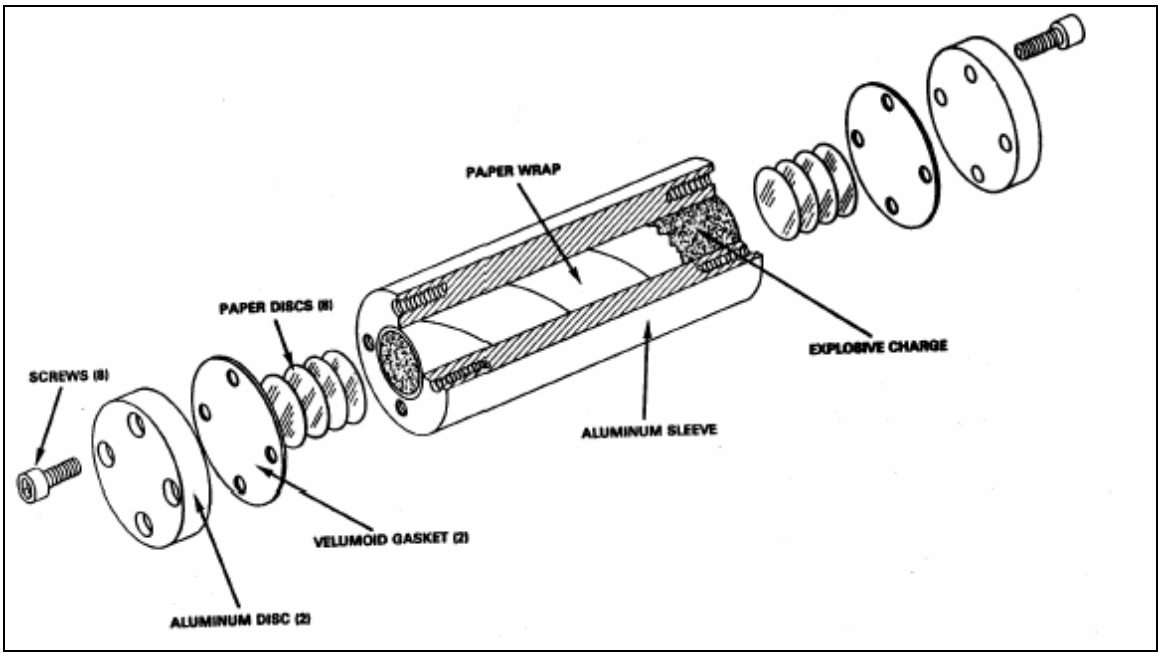

FIGURE 1. Apparatus for exudation test

Top

U.S. 202.01.011

TEST DESCRIPTION

1. TYPE OF TEST: Growth Characteristics - Irreversible Growth

2. PURPOSE: This test is designed to measure the irreversible growth of solid energetic materials.

3. BACKGROUND: When explosives contain liquids as impurities or plasticizers they often undergo irreversible dimensional changes in storage and when subjected to many temperature cycles between -54 and + 60 ºC (- 65 and +140 ºF). In explosives containing TNT, the dinitrotoluenes form a low-melting liquid eutectic that can cause problems. Mononitrotoluenes added as anti-cracking agents give large irreversible growth in TNT-based explosives. Another cause for irreversible dimensional change is solid-state polymorphic transformation, such as occurs in ammonium nitrate.

4. TEST ARRANGEMENT:

4.1 A programmable conditioning chamber that operates within the specified temperature range and suitable for energetic materials is used to conduct this test.

4.2 Acceptable test samples are cylinders at least 1.27 cm (0.5 inch) diameter by 1.27 cm (0.5 inch) high, the preferred sample size is 2.54 cm (1.0 inch) diameter by 2.54 cm (1.0 inch) high.

5. PROCEDURE:

5.1 Three test samples are conditioned to 20 ± 2 ºC (70 ± 3 ºF) weighed and measured to the nearest 0.01mm (0.0005 inches) using a micrometer or calipers. The initial mass, length and diameter (measured at the center) of each pellet are recorded. The pellets are then placed in the conditioning chamber and temperature cycled between - 54 and + 60 ºC (- 65 and +140 ºF) for 30 or more cycles. The test samples are maintained at each temperature long enough for the entire sample to reach equilibrium with the conditioning chamber. An additional pellet of the test explosive equipped with a thermocouple at its center may be used to track the internal temperature of the test samples.

5.2 At the conclusion of 30 or more cycles the pellets are slowly conditioned to 20 ± 2 ºC (70 ± 3 ºF) weighed and carefully measured to the nearest 0.01mm (0.0005 inches) using a micrometer or calipers. The final mass, length and diameter (measured at the center) of each pellet are recorded. The advisory passing criterion is not more than 1% growth.

5.3 The change in volume (in percent of original volume) of each pellet is calculated using the measured dimensions. Alternatively, the change in volume may be determined by density change.

6. RESULTS AND DATA:

6.1 The following information shall be reported for this test:

a. Method used to prepare the test samples (pressing, casting)
b. Type of conditioning chamber used to conduct the test (programmable, manual)
c. Initial sample mass, length, diameter and percent of theoretical maximum density (TMD) for each sample
d. Number of temperature cycles
e. Duration of conditioning of the samples at each temperature
f. Temperature profile; i.e. rate at which temperature was changed from maximum to minimum, dwell time at extreme temperatures, heating or cooling rate to return samples to 20 ºC

g. Percent volume change for each sample
h. Average percent volume change
i. Observations of change in appearance, e.g., cracking, discoloration, etc.

7. SUPPLEMENTAL INFORMATION:

8. NATIONAL REFERENCES:

Top

TEST DESCRIPTION

1. TYPE OF TEST: Thermal Stability - Determination of Critical Temperature and Self-Heating

2. PURPOSE: The analyses described in this Method can be used both to predict and to experimentally determine the critical temperature and self-heating properties associated with a given energetic material. In general, the assumed geometry for self-heating should always take into account the worst case scenario for any given charge size.

3. BACKGROUND: When an energetic material is slowly subjected to an elevated temperature for a prolonged period of time, the material may undergo the phenomenon of self-heating. In this process, thermal energy is liberated in the interior of the explosive as a result of slow chemical decomposition. At some point, a state of equilibrium exists at which the energy released by the thermal decomposition process is equal to the energy dissipated by the system. If the thermal energy is released at a faster rate than it is dissipated, the temperature of the explosive will increase until a catastrophic event occurs. This event, generally referred to as slow cook-off, is associated with the material's critical temperature. The critical temperature is defined as the lowest constant surface temperature above which a given energetic material of a specific size and shape will catastrophically self-heat. Critical temperature is a heat balance between heat generated and heat lost for a given mass and geometry of an explosive or propellant.

4. TEST ARRANGEMENT:

4.1 The experimental data obtained from DTA, DSC, or TGA experiments described in U.S 202.01.007, U.S. 202.01.008 or U.S. 202.01.020 can be used to determine the various kinetics parameters required in this method, i.e., Arrhenius activation energy and pre-exponential. These parameters may be associated with a given chemical decomposition reaction or may describe the global process. Numerous methods for calculating kinetics parameters by using the thermal data acquired from DTA, DSC, or TGA are available (References a through h). These parameters can then be used to calculate the critical temperature and self-heating properties associated with a particular explosive of a given size and geometry

4.2 Various tests may be used to measure, experimentally, critical temperature of an explosive of a given size and geometry and either confined or unconfined. These tests include the isothermal cookoff (ICO), slow cookoff (SCO), one-liter cookoff (1-LCO) and the isothermal Time-To-Explosion (Henkin TTE). The ICO and SCO are large-scale and confined, the 1-LCO is large-scale and unconfined and the Henkin TTE is very small-scale and moderately confined. The design of the first three tests must incorporate the use of at least one thermocouple placed at the geometrical center of the explosive and one to monitor the temperature of the heat source.

5. PROCEDURE:

5.1 The critical temperature, T_c, associated with an explosive can be calculated for a given size and shape by using equation 1,which is commonly referred to as the Frank-Kamenetskii (F-K) equation (Reference (e)). Two equivalent forms of this equation, (a) and (b), are given below.

(a) (b)

(1) $T_c = E_a/R\ln((a^2QZE_a)/(c\delta RT_c^2\Omega))$ or $Tc = E_a/R\ln(a^2\rho QZE_a/T_c^2\lambda\delta R)$

where

T_c = critical temperature (ºK)
E_a = Arrhenius activation energy (cal mol^{-1})
Z = pre-exponential (s^{-1})
A = a dimension (e.g., radius of a sphere or infinite cylinder or half-thickness of an infinite slab)
Q = heat of the self-heating reaction (not detonation or combustion)(cal g^{-1})
C = specific heat (cal g^{-1} $ºC^{-1}$)
δ = shape factor (2.0 for infinite cylinders, 3.32 for spheres, 0.88 for infinite slabs and 2.7- 2.8 for cylinders with length equal to diameter)
Ω = thermal diffusivity (cm^2 s^{-1})
R = gas constant (1.987 cal mol^{-1} $ºK^{-1}$)
ρ = density (g $(cm^3)^{-1}$)
λ = thermal conductivity (cal cm^{-1} s^{-1} $ºC^{-1}$)
$(c\Omega)^{-1} = \rho\lambda^{-1}$

5.2 Arrhenius activation energies (E_a) and associated pre-exponentials (Z) for global thermal decomposition processes may be determined in a time-efficient manner by using variable heating rate (DSC) methods as described in references (a) and (h). Other methods, as deemed appropriate by the researcher, may also be used to determine these parameters. While these methods for determining global parameters generally provide adequate data, the most accurate critical temperature will be predicted by using kinetics parameters that actually correspond to the component reaction involved. Some specific examples of data acquisition and use are provided in reference (g).

5.3 Thermal diffusivity (Ω) of the explosive to be tested may be determined by the method described in reference (g) and used in equation 1(a). Thermal conductivity of the explosive can be determined from the thermal diffusivity measurement, obtained under non-steady state conditions, by the relationship, $\lambda = \rho c\Omega$. On the other hand, the thermal conductivity can be estimated to be in the range 2 to $13e^{-4}$ cal cm^{-1} s^{-1} $ºC^{-1}$ and then the critical temperature reported as a range (Reference e). For the most part, the critical temperature calculated by using global kinetics parameters and the above stated thermal conductivity range is a conservative value. A conservative value is useful when used in conjunction with safety characteristics associated with scaling up a melt casting operation.

5.4 An experimental critical temperature for a particular size and geometry can be obtained from isothermal tests, such as the ICO (see 4.2 above). Test conditions in which the charge surface temperature, T, exceeds that of the T_c value are described by the relationship:

(2) $1/T_c = 1/T + X/E_a$

where the value of X is defined in reference (f).

Experimental cookoff data are plotted as logarithm of the time-to-explosion, log t_e, versus the reciprocal of the temperature of explosion (T_e). A straight line is then fitted to the data and a point on the line is located that corresponds to t_e = II, the thermal time constant. This constant is defined as:

(3) $II = a^2/\Omega$

The experimental critical temperature, T_c, is then calculated by using equations (2) and (3). Figure 1 provides an example of how T_c is determined.

5.5 Another method for determining an experimental critical temperature is the isothermal Henkin TTE test as described in reference (k). The critical temperature, T_c, of an experimental explosive is defined as the lowest temperature at which an explosion can be obtained. This simple test provides both times-to-explosion, t_e, and the associated temperature, T_e. It has been reported in reference (k) that a safe failure criterion (no explosion observed) for 40 mg samples in the Henkin TTE configuration, is no explosion in a minimum of 1000 seconds. The Energetic Materials Branch of the Air Force Research Laboratory uses four consecutive tests with no explosion in a 2000-second time period. Data acquired from this test can also be plotted as logarithm of the te versus the reciprocal of T_e. This graphical presentation of the data generally yields a linear section at relatively low T_e values (approaching the T_c), then bending sharply upward near the T_c. The plot becomes vertical at the T_c indicating an infinitely long induction period. This data plot sometimes yields a curve with two linear sections with that section at the higher temperatures having longer than anticipated times to explosion (lesser slope). This experimental T_c can be compared to that calculated by using the F-K equation, where a relatively close comparison provides confidence in the parameters used in the equation.

5.6 Dynamic tests that are equipped with at least one thermocouple located at the geometrical center of the explosive and one located in the oven, will also provide an experimental T_c for these specific experimental conditions. Examples of this type of test are the SCO and 1-LCO. The heating rate used in these tests is 3.3 ºC/hour and these real-time temperature-time data are acquired by a computerized system. A description of the SCO units is provided in reference (l). Other data gleaned from these tests are the initiation temperature (T_{sh}) associated with the self-heating process and severity of the catastrophic reaction.

5.7 Kinetics parameters may also be obtained from experimental isothermal cookoff temperature-time data obtained from the adiabatic rise of the center temperature of the sample leading to cookoff by using the equation:

(4) $\rho c dT/dt = \rho Q k = \rho Q Z \exp(-E_a/RT)$

where: dT/dt = slope of the center time-temperature trace at a given temperature, T

When the slopes of the center time-temperature traces, log (dT/dt), versus the reciprocal of the temperature (1/T) are plotted for a series of isothermal cookoff tests with differing temperatures, a straight line is obtained. The line will have a slope of $-E_a/2.303R$ and an intercept of log QZ/c. E_a and Z (with knowledge of Q and c) can be calculated from the equations:

(5) $m \text{ (slope)} = -(E_a/2.303R)$

(6) $\text{intercept} = \log QZ/c$

Critical temperature can then be calculated by using equation (1).

6. RESULTS AND DATA:

6.1 The format for reporting calculated and experimental data is at the discretion of the researcher. As a minimum, the calculated critical temperature should be accompanied by the various parameters used in the F-K equation.

6.2 Typical test results for a Navy explosive composition are shown in the table below:

Explosive	Critical Temperature (ºC)	Diameter, inch	500-day cook off Temp. (ºC) (MK 84 bomb)
PBXN-9	233	0.5	129
PBXN-9	201	2.0	
PBXN-9	179	6.0	
PBXN-9	166	12.0	

6.3 The calculated and experimental critical temperatures for octol (65/35) in one-liter spherical Henkin TTE geometries, along with input parameters to the F-K equation are shown in the table below (USAF):

Parameter	Value
E_a (cal mol_{-1})	50200[1]
Z (s^{-1})	1.49e19[1]
a (cm) (Henkin TTE/1-LCO)	0.032/6.123
Q (cal g^{-1})	500[2]
δ	3.32
R (cal mol^{-1} $ºK^{-1}$)	1.987
ρ($g(cm^3)^{-1}$)	1.67[3]
λ(cal cm^{-1} s^{-1} $ºC^{-1}$)	4c-4[4]
T_c (ºC) (Henkin TTE/1-LCO)	236/154
T_c (ºC) (Henkin TTE/1-LCO)[5]	236/167[6]
T_{sh} (ºC) (1-LCO)	142

1. Determined by using the using the method described in reference (h) and the peak temperatures associated with the decomposition of the HMX component.
2. Assumed value (Reference (h).
3. Measured value at 82.6 ºC (Reference (i).
4. Value adjusted to fit Henkin TTE experimentally determined T_c.
5. Experimental data, the catastrophic reaction was a combustion that consumed the sample, the one-liter flask was deformed, but in one piece.
6. Determined by using the one-liter cookoff test (References (i) and (j). The raw data from reference (i) have been re-evaluated and the values shown in the above table reflect this process.

7. SUPPLEMENTARY INFORMATION:

7.1 Self-heating requirements, as defined in reference (m), provide the acceptance criteria for Navy explosives. This criterion requires that an explosive should have a calculated critical temperature greater than 82 ºC (180 ºF) for a given geometry and size, and that the time-to-explosion at 82 ºC exceeds 500 days. Unless other specific requirements are identified, the assumed charge size for self-heating calculations is that of the MK 84 2,000-pound bomb.

7.2 As described in reference (g), two equations are generally used to calculate the 500-day cook-off temperature. Equation (7) allows for the calculation of the Arrhenius rate constant and then the 500-day isothermal cook-off temperature may be calculated from solving equation (8):

(7) $\quad Ln(1-F^*) = -tk$

Where: F* = fraction or amount of material that reacted during the warm-up period
t = time to cook off, 4.32×10^7 seconds (500 days)
k = Arrhenius rate constant

The fraction of material that reacts during the warm-up time (time required to bring the sample up to the oven temperature) is calculated by summing the fractions reacted during 10º increments prior to the center of the sample reaching the oven temperature. This fraction, F*, can be calculated from experimental isothermal cook-off data and is usually found to be 0.06 ± 0.02.

7.3 The value for k, the Arrhenius rate constant, can then be substituted into equation (8) to determine the 500-day cook-off temperature.

(8) $k = A \exp(-E_a/RT)$

where: A = frequency factor
T = cook-off temperature

8. NATIONAL REFERENCES:

a. Kissinger, H. E., Journal of Research, National Bureau of Standards, Vol. 57 (1956), p.217.
b. Balarin, M. J., Journal of Thermal Analysis, Vol. 12 (1977), p. 169.
c. Petty, M. R. et al., Journal of Thermal Analysis, Vol. 11 (1977)
d. Coats, A. N., and Redfern, J. P., Nature, Vol. 201 (1964), p. 68.
e. Rogers, R. N., Thermochimica Acta, Vol. 11 (1975), p. 131.
f. Zinn, J. and Rogers, R.N., "Thermal Initiation of Explosives," Journal of Physical Chemistry, Vol. 66 (1962), p. 2646.
g. Pakulak, J. M., NWC Standard Methods for Determining Thermal Properties of Propellants and Explosives, NWC TP 6118, March 1980.
h. ANSI/ASTM E698-79, "Standard Test Method for Arrhenius Kinetic Constants for Thermally Unstable Materials."
i. Sprague, C., Aubert, S. and Reich, R., "Characterization of the Sensitivity Properties of (65/35) Fine Grain Octol," AFRL-MN-EG-TR-1998-7031, Air Force Research Laboratory, Munitions Directorate, Eglin AFB, FL 32542-5910, April, 1998.
j. R.L. McKenney, Jr. and T.R. Krawietz, "One-Liter Test: A Mid-Scale Safety Characterization Test For Melt-Castable Explosives", AFRL-MN-EG-TR-1999-7049, Air Force Research Laboratory, Munitions Directorate, Eglin AFB, FL, July 1999.
k. Gibbs, T. and Popolato, A. (ed.), "LASL Explosive Property Data," p. 231, University of California Press, Berkeley, CA,
l. McKenney, R., Summers, P., Schomber, P. and Whitney, S., "Small-Scale Testing of High Bulk Cubical and Spherical Nitroguanidine for Comparative Evaluation," WL/MN-TR-91-44, Wright Laboratory, Armament Directorate, Eglin AFB, FL 32542-5910, February 1991.

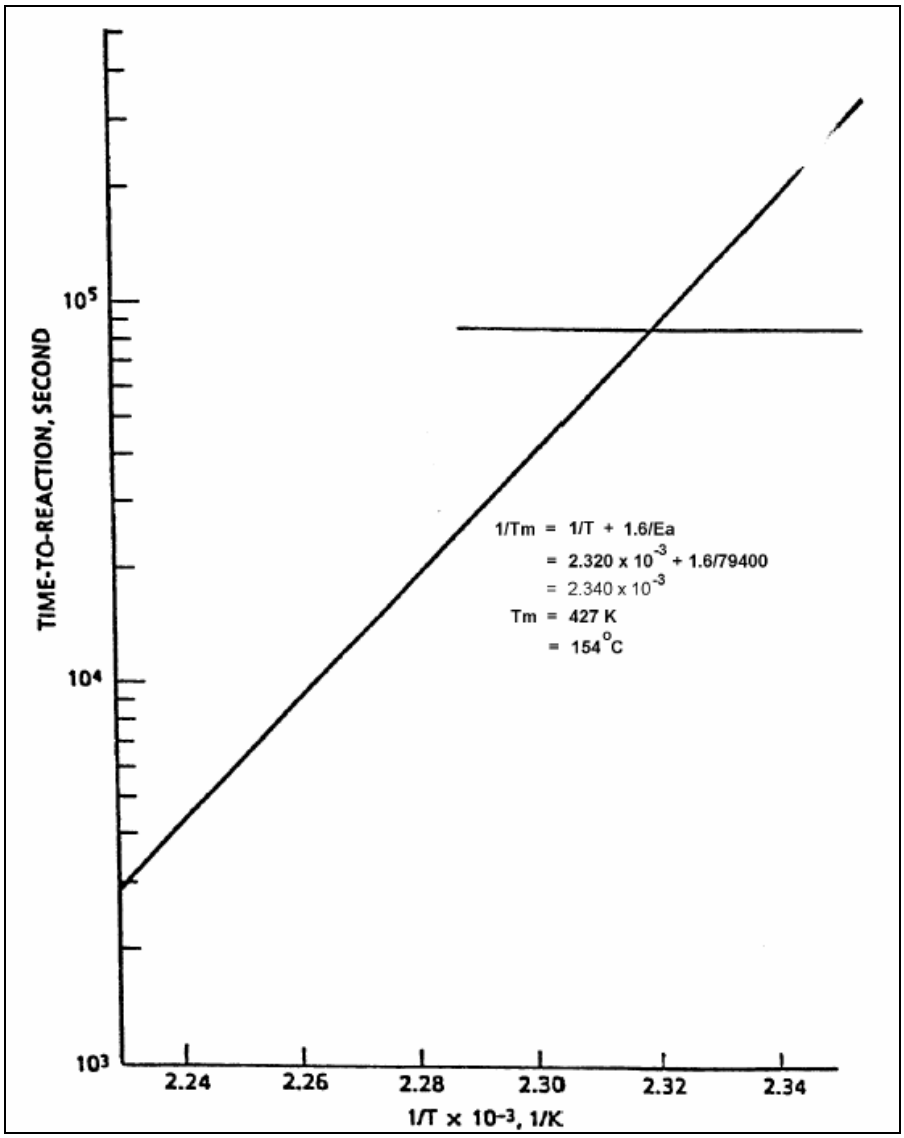

FIGURE 1. Critical temperature determination for 5-inch diameter ICO sample.

Top

TEST INFORMATION SHEET

1. TYPE OF EXPLOSIVE: High Explosives, Propellant, and Pyrotechnics

2. TEST TITLE: Thermal Stability Test

   a. Type of Test: Hazard Assessment/Sensitivity

   b. Description: This test must demonstrate that the candidate high explosive is thermally stable at 75 ^{o}C. A sample of up to 50g is placed transferred to a tared beaker, covered with a watch glass and weighed. The covered beaker is then placed in a constant temperature explosion-proof oven. The temperature of the oven is raised to 75 ^{o}C and maintained at that temperature for 48 hours unless an ignition or explosion of the sample occurs. The temperature is recorded continuously. The beaker is then removed and cooled in a desiccator and weighed. The weight loss as a percent of the sample weight is calculated.

   c. Information Requirements for Assessment: This test is be used to evaluate the thermal stability of explosive materials.

   d. Typical Results: The sample is considered to have failed the test if it explodes, burns, or decomposes.

   e. Repeatability and Reproducibility: Not Applicable

3. NATIONAL REFERENCES:

   a. TB 700-2, NAVSEAINST 8020.8, T011A-1-47, DLAR 8220.1, of 5 January 1998.

Top

TEST INFORMATION SHEET

1. TYPE OF EXPLOSIVE: High Explosives, Propellant, and Pyrotechnics

2. TEST TITLE: Unconfined Burning

   a. Type of Test: Hazard Assessment/Sensitivity.

   b. Description: This test is used to determine if a small quantity of the test material will transition from deflagration to detonation when unconfined. A 125-gram sample is placed in a plastic beaker and placed on a bed of kerosene-soaked sawdust. The sawdust is ignited with an electric igniter. Three samples are tested.

   c. Information Requirements for Assessment: The data are used to determine whether an explosive is safe to handle, transport, and store.

   d. Typical Results: The material fails the test if an explosion or detonation occurs.

   e. Repeatability and Reproducibility:

3. NATIONAL REFERENCES:

   a. TB 700-2, NAVSEAINST 8020.8, T011A-1-47, DLAR 8220.1, of 5 January 1998

Top

U.S. 202.01.015

TEST INFORMATION SHEET

1. TYPE OF EXPLOSIVE: High Explosives, Propellant, and Pyrotechnics

2. TEST TITLE: Internal Ignition Test

   a. Type of Test: Hazard Assessment/Sensitivity.

   b. Description: The explosive material is contained in a steel pipe that is capped at both ends. A black powder igniter is located at the center of the explosive sample and is used to ignite the explosive. Three tests are performed.

   c. Information Requirements for Assessment: This is a hazard classification test.

   d. Typical Results: The test is considered positive if either the pipe or one of the end caps is fragmented into at least two distinct pieces separated from the pipe.

   e. Repeatability and Reproducibility:.

3. NATIONAL REFERENCES:

   a. TB 700-2, NAVSEAINST 8020.8, T011A-1-47, DLAR 8220.1, of 5 January 1998.

Top

TEST INFORMATION SHEET

1. TYPE OF EXPLOSIVE: High Explosives, Propellant, and Pyrotechnics

2. TEST TITLE: 5-Second Ignition Temperature

   a. Type of Test: Hazard Assessment/Sensitivity.

   b. Description:

      (1) Apparatus - A molten Wood's metal bath and sample tubes (copper or brass) are used.

      (2). Procedure - A 1 gm sample is loaded into a copper or brass tube (usually a No. 6 blasting-cap shell). The tube is immersed the Wood's metal bath heated to a temperature (T), and the time interval (t) before ignition is recorded. The bath temperature is then varied and additional samples are tested to obtain five or six points through which a temperature-time curve can be drawn. The ignition temperature is the one for which ignition occurs at five seconds.

   c. Information Requirements for Assessment: Hazardous Component Safety Data Statement (HCSDS) requires this test.

   d. Typical Results: Temperatures that are always higher than the ignition temperatures as determined by differential thermal analysis (DTA) are reported.

   e. Repeatability and Reproducibility: Normally reproducible.

3. NATIONAL REFERENCES:

   a. McLain, Joseph H., Pyrotechnics, The Franklin Institute Press, Philadelphia, PA (1980).

   b. Henkin, H. and McGill, R., "Rates of Explosive Decomposition of Explosives", Industrial and Engineering Chemistry, 44, 1391 (June 1952).

#Top

U.S. 202.01.017

TEST INFORMATION SHEET

1. TYPE OF EXPLOSIVE: High Explosives, Propellant, and Pyrotechnics

2. TEST TITLE: Taliani Test

a. Type of Test: Hazard Assessment/Sensitivity.

b. Description: The Taliani Test determines the stability of an explosive material by subjecting it to a specified temperature and atmosphere (usually 110 ^{o}C and nitrogen) and monitoring the rise in pressure over the propellant with time. The Taliani test apparatus consists of the following: heating block, helix (2-mm ID), connecting tube, gas infusion evacuating system (vacuum pump/gas supply), manometer, and heating tube. The sample is heated until pressure has risen 150-mm or for 6 hours (whichever occurs first). The pressure change as a function of time is recorded.

c. Information Requirements for Assessment: This test is used to determine stability.

d. Typical Results: Stable compounds have slopes of less than 1.0-mm Hg/min.

e. Repeatability and Reproducibility: Duplicate determinations should agree within 2.8-mm in the 0-50-mm range, within 4.9-mm in the 50-100-mm and within 4.6-mm above 100-mm.

3. NATIONAL REFERENCES:

a. MIL-STD-286C, "Military Standard: Propellants, Solid, Sampling, Examination and Testing", Method 406.1.3 Notice 1 of 8 January 1999.

b. MIL-STD-2100, "Military Standard: Propellant, Solid, Characterization of", 30 March 1983.

Top

TEST INFORMATION SHEET

1. TYPE OF EXPLOSIVE: Propellants

2. TEST TITLE: Surveillance of Single and Double Base Propellants

a. Type of Test: Hazard Assessment/Sensitivity.

b. Description: A 224 gm (8-oz) glass bottle having a wide-mouth with a velvet ground mushroom stopper is used for this test. It is placed in a chamber at 65 $\pm$ 1 ^{o}C. Daily observations are made; samples may be withdrawn for mechanical and/or closed bomb testing. The number of days required to cause the liberation of visible reddish fumes is recorded. If mechanical properties and/or closed bomb tests are conducted, the results are also reported.

c. Information Requirements for Assessment: This test is used to predict the safe storage life of a propellant.

d. Typical Results: Single-base propellant should last several hundred days before fuming. Double-base propellant should last at least 100 days before fuming. The test is not reliable for triple-base propellants.

e. Repeatability and Reproducibility: This is a qualitative test, but reproducibility is fair.

3. NATIONAL REFERENCES:

a. MIL-STD-286C, "Military Standard, Propellants, Solid, Sampling, Examination and Testing", Method 407.1, 8 January 1999.

Top

U.S. 202.01.019

TEST INFORMATION SHEET

1. TYPE OF EXPLOSIVE: High Explosives, Propellant, and Pyrotechnics

2. TEST TITLE: Minimum Ignition Temperature

a. Type of Test: Hazard Assessment/Sensitivity.

b. Description: The sample is placed in a metal cup and immersed in a molten Wood's metal bath. Samples are ignited at various bath temperatures and the time to ignition is recorded. A graph of results is prepared and the temperature at which a minimum ignition temperature would be observed at t = infinity, is determined.

c. Information Requirements for Assessment: Data required for safe drying of composition life.

d. Typical Results: The minimum ignition temperature is usually the same as that determined by DTA.

e. Repeatability and Reproducibility: Repeatable to $\pm$ 1 ^{o}C.

3. NATIONAL REFERENCES:

a. Johnson, Duane M., “Ignition Theory: Application to the Design of New Ignition Systems”, NWSC/CR/RDTR No. 56, Naval Weapons Support Center, Crane, IN (24 November 1965).

b. McLain, Joseph H., Pyrotechnics, The Franklin Institute Press, Philadelphia, PA (1980).

c. Ellern, Herbert, Military and Civilian Pyrotechnics, Chemical Publishing Co., Inc., New York, NY (1968).

d. Henkin, H. and McGill, R., "Rates of Explosive Decomposition of Explosives", Industrial and Engineering Chemistry, p. 44, 1391 (June 1952).

e. STANAG 4491, Explosives, Thermal Sensitiveness and Explosiveness Tests.

Top

TEST DESCRIPTION

1. TYPE OF TEST**:** Stability (variable temperature) - Differential Scanning Calorimetry (DSC)

2. PURPOSE: The test is used to evaluate the behavior of energetic materials when subjected to a temperature rise. Characteristics displayed on thermograms can be used to monitor samples in comparison to controls and to examine whether changes that may affect stability have occurred in a sample. Results provide onset temperature and peak maxima for any endothermic or exothermic event.

3. BACKGROUND: This technique measures the heat flow to or from a sample as it undergoes transitions in a thermally controlled environment. Two types of instrumentation are generally used for measuring heat flow - power compensation DSC and heat flux DSC.

3.1 Power compensation DSC consists of individual sample reference holders, identical in size and material of construction, each fitted with its own heater and platinum resistance thermometer. In normal operation, the sample pan contains the explosive while the reference pan is either left empty or is filled with an inert reference material. The system is operated by two electronic control loops. One is for the average temperature control so that the temperature of sample and reference can be increased at a predetermined rate. The second loop ensures that if a temperature differential develops between reference and sample (due to exothermic or endothermic reaction in the sample), the power input is adjusted to remove this difference. Thus the temperature of sample and reference is kept the same by the continuous and automatic adjustment of the heater power for either the sample or the reference element depending on whether the sample undergoes exothermic or endothermic changes. Therefore, a signal is produced which is directly proportional to the difference between the heat input to the sample and that to the reference. The area beneath the curve is a direct measure of the heat involved in bringing about the transition, i.e., heat flow to/from the sample (dH/dt). This is usually measured in milliwatts. Figure 1 provides a schematic diagram of a power compensation DSC.

3.2 Heat flux DSC instruments operate on the DTA principle (see U.S. 202.01.007) as shown in Figure 2. Mathematical manipulation of the measured DTA signal is used to obtain values of heat flow to/from the sample to bring about the transition. The thermal analog of Ohm's law is used:

$$dH/dt = \Delta T/R_{th}$$

where:

dH/dt is the heat flow
ΔT is the differential temperature
R_{th} is the thermal resistance to heat flow between the sample pan and holder

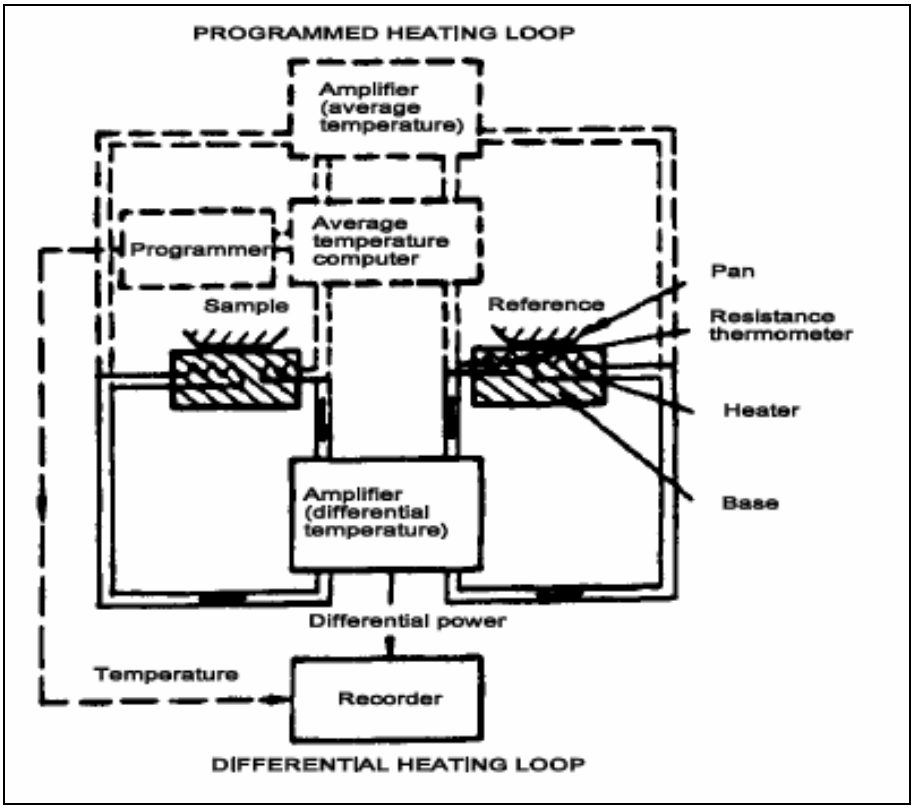

FIGURE 1. Power compensation DSC schematic diagram.

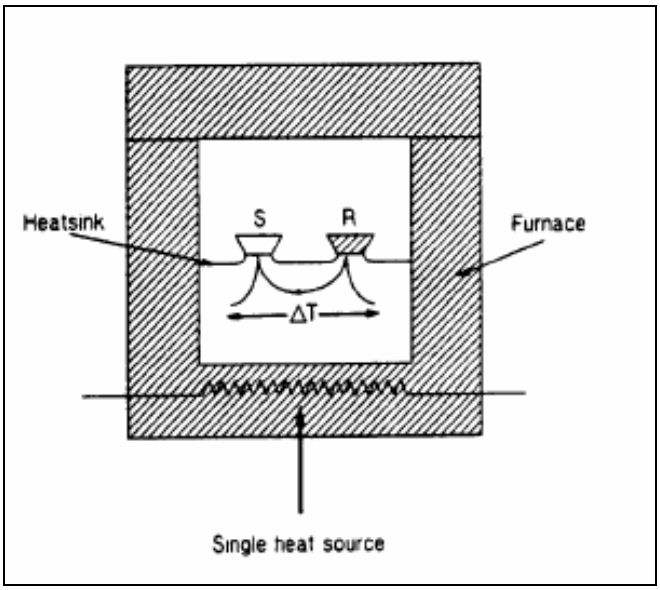

FIGURE 2. Heat flow DSC schematic diagram.

3.2.1 The heat flow to/from the sample given by the difference in heat flows to the reference and sample holders.

$$dH/dt = dQ_S/dt - dQ_R/dt$$

where:

dQ_S = heat flow to sample
dQ_R = heat flow to reference

3.2.2 Applying the "thermal" Ohm's law:

$$dH/dt = -(T_S - T_R)/R_{th}$$

where: T_S and T_R are the temperatures of the sample and reference, respectively

The temperature difference given by the output from the two thermocouples connected in opposition is given by:

$$\Delta T = \Delta U/S$$

where: ΔU is the thermocouple potential (µV)
S is the thermocouple sensitivity (µV/K)

It follows that:

$$dH/dt = \Delta U/R_{th}S$$

dH/dt has a - ve value for exothermic reactions and a + ve value for endothermic reactions.

3.2.3 Both R_{th} and S are functions of temperature and can be combined as the calorimetric sensitivity. This is determined by calibration using the known heat of fusion of the reference material and gives a value of the measuring cell sensitivity in µV/mW. This term is also referred to as the cell constant.

4. TEST ARRANGEMENT:

4.1 Apparatus:

4.1.1 A Differential Scanning Calorimeter is required which is capable of providing heating rates up to 20 ºC/minute with the capability to automatically record the differential heat flow between the sample and reference materials with the required precision and accuracy. It should have an upper temperature capability of at least 500 ºC.

4.1.2 Sample crucibles must be manufactured from material that is inert to the material under test and has high thermal conductivity. Aluminum is the most typically used material.

4.1.3 A purge gas supply with an associated flow controller.

4.1.4 If a reference material is used, it must be thermally inert over the temperature range to be used. For many applications, alumina is a suitable inert reference material.

4.1.5 Crucible sealing press for sample preparation.

5. PROCEDURE:

5.1 Sample preparation: Samples should be representative of the material in the final form anticipated for service use. Cast cure materials shall be fully cured. Powders should be consolidated to a density similar to that proposed for a final configuration.

5.2 Calibration should be performed by measurements of the heats of fusion and melting points of standard reference materials. The instrument should be calibrated using the same type of sample crucible, heating rate, purge gas, and flow rates as will be used for the test instruments. Typical standard reference materials are shown in the table below:

Material	Melting point (ºC)	Heat
Indium	156.6	28.42
Lead	327.5	23.10
Zinc	419.5	108.0

5.3 Samples should be accurately weighed and placed in the sample and reference material crucibles. The sample chamber should be purged with the inert gas at the flow rate recommended by the DSC apparatus manufacturer.

5.4 The sample should be heated at the recommended rate (10 ºC/minute, maximum) over the temperature range of interest and a recording of the thermogram should be produced.

6. RESULTS AND DATA:

6.1 The following information shall be reported for this test:

i. Instrument used.
ii. Heating rate.
iii. Purge gas and flow rate.
iv. Sample mass.
v. Type of sample pan used (material of construction; open or closed; crimped or un-crimped; lid bulged up or down; etc).
vi. Atmosphere in which pan was prepared and sealed.
vii. Thermogram.
viii. Onset temperatures, peak temperatures, and temperature at which the trace returns to the baseline for all endotherms and exotherms.

7. SUPPLEMENTARY INFORMATION**:** None.

8. NATIONAL REFERENCES:

a. NATO STANAG 4515, Thermal Characterization of Explosives.

b. ASTM E537-98, "Standard Test Method for Assessing the Thermal Stability of Chemicals by Methods of Differential Thermal Analysis," Philadelphia: American Society for Testing and Materials, 1998.

Top

U.S. 202.01.021

TEST DESCRIPTION

1. TYPE OF TEST: Thermal Stability (Variable Temperature) – One Liter Cook-Off Test

2. PURPOSE: A dual-purpose, safety-oriented test designed to determine the self-heating temperature associated with melt-castable energetic materials/formulations and the severity of the unconfined, catastrophic, thermal decomposition reaction. These data are used in conjunction with small-scale safety data to predict the response of the energetic material/formulation to the thermal insult associated with scale-up operations.

3. BACKGROUND: All energetic materials decompose exothermically when exposed to elevated temperature for prolonged times, such as during melt casting operations with large quantities of material. When the decomposition process produces heat faster than it can be dissipated to the surroundings, the energetic material will begin to self-heat. This process may lead to a violent or catastrophic event (explosion). Prior to this test the energy of activation (E_a) and pre-exponential (Z) of the material will have been determined (e.g., through variable heating DSC) and the critical temperature (T_c) for larger scale geometry predicted. The accuracy of a T_c prediction for larger geometry, which is made by using the Frank-Kamenetskii equation along with data generated by small-scale tests, can be determined by conducting the 1-liter test. The latter test will provide insight into the severity of the thermal decomposition reaction, as well as the temperature associated with self-heating.

4. TEST ARRANGEMENT:

4.1 Sample Holder: The sample holder is a 1-liter, Pyrex, round-bottom flask equipped with a thermocouple bundle inserted into the center of the sample and extending to the bottom of the flask. The neck of the flask protrudes through a fitted circular opening in the top of the oven that effectively secures the flask in place during the test. The oven top is sectioned through the centerline of this opening thereby allowing removal of the front section of the top so the neck of the flask can be placed in the opening.

4.2 Thermocouple Bundle: The thermocouple bundle can be constructed with as many as six and as few as two Type k, Inconel encased thermocouples. It is important that one thermocouple touch the bottom of the flask and that the tip of another is located at the center of the flask. If more than two thermocouples are used, one should be located at the top of the spherical portion of the flask and the others, if any, at the mid-point(s) between the bottom/center and/or the top/center. A sixth thermocouple can be located in the neck of the flask if deemed necessary. The bundle can be held in place by any type of clamping device placed on top of the oven. The internal oven temperature is controlled and monitored by two separate thermocouples. All thermocouples are randomly calibrated by using an ice/water bath.

4.3 Disposable Oven: The method used for heating the flask is optional. The method used at AFRL/MNME utilizes a disposable, plywood (5/8-inch thick) oven equipped with a four-element electric resistive heater that is driven by an Omega, Model 650, proportional temperature controller. The four elements are mounted horizontally between the back wall of the oven and a baffle separating them from the main section containing the sample flask. The height of the baffle is 14 inches thereby allowing a one-inch wide gap at the bottom and top for air circulation through the main oven chamber. The elements are placed approximately 8 inches above the floor in a rectangular volume with width, height and depth dimensions of 16, 16 and 6 inches. The inner blade assembly of a small, disposable, double-bladed fan circulates air through the main chamber of the oven by pushing the air through the heated elements. The upper portion of the oven-circulating fan is outside of the oven proper and is designed to cool the fan motor that is positioned on the top of the oven. It is important that the opening at the top of the one-liter flask is shielded from the draft caused by this cooling fan. The front door of the oven consists of two 0.375-inch thick glass panes positioned 0.5-inch apart.

The panes are held in place by grooves cut into the plywood. The glass front allows the reaction flask to be observed by video camera during the test. The oven is pre-conditioned prior to the test by holding the internal portion at approximately 110 ºC for 24 hours. This procedure essentially degasses and slightly chars the internally exposed wood, thus preventing the inside surface of the internal glass pane from clouding over early in the test. After heat conditioning, all seams in the oven are sealed with a heat-resistant, siliconized caulking material.

4.4 Lighting: The inside of the oven is lighted by using an externally placed floodlight

4.5 Data Acquisition: Thermocouple data are collected by using a commercially available program-capable of measuring voltage that is converted to temperature (ºC). The data are grabbed at predetermined time intervals (time interval is at the discretion of the researcher). The recommended grab time is every 15 seconds. Temperature data should be supported by video data that are acquired for the length of the test. This combination helps in data interpretation.

5. PROCEDURE:

5.1 Sample Loading/Preparation: A predetermined amount of sample can either be cast directly into the one liter flask or can be loaded in chunk or powder form. The thermocouple bundle is then inserted into the center of the flask, either in the molten or dry sample. A material with a low coefficient of thermal expansion can be cast directly into the flask, but a sample such as Composition B must be loaded in chunk form in several operations. As is indicated in Section 5.2 below, the oven temperature is raised rapidly to a temperature slightly above the melting temperature of the formulation. A pre-cast formulation with a high coefficient of thermal expansion will expand and crack the flask, hence the need for loading in chunk or powder form. Also, it is desirable, but not mandatory, that the volume of the liquid or liquid/solid mixture match the volume of the spherical portion of the one liter flask at the self-heating temperature to maintain one-dimensionality.

5.2 Sample Conditioning: The sample is heated rapidly (minimum 10 °C/min) to a temperature that is 10 to 20 ºC above its melting point and held for approximately 5 hours. This generally provides sufficient time for the sample to be in the molten state and the sample and oven temperatures to have equilibrated.

5.3 Frank-Kamenetskii (F-K) Equation: This Frank-Kamenetskii equation (2) is used to predict the self-heating temperature (estimated temperature leading to the initiation of catastrophic thermal decomposition) for an energetic material of a specific size and configured in a specific geometry. It is used to predict the self-heating temperature for the larger kettles used in melt-casting operations. The various components of the equation, some of which are measured and some estimated, are shown below. The energy of activation, E_a, and pre-exponential factor, Z, are determined by using ANSI/ASTM E698-79. By this method they are global values and, as such, probably do not represent the specific chemical decomposition step responsible for the self-heating event. This will affect the accuracy of the calculated value, but usually leads to a conservative predicted self-heating temperature. Another important component of this equation is the thermal conductivity of the sample at or near the self-heating temperature. While a measured value is preferred, it is generally not available for the desired sample state and temperature of interest. An estimated thermal conductivity range can be used, usually 2 to $13e^{-4}$ cal cm^{-1} s^{-1} $ºC^{-1}$ or a value can be extracted from the F-K equation by inserting the experimentally found self heating temperature (for the one-liter geometry) and the other specific experimental conditions. This extracted value can then be used to predict the self-heating temperature for a specific melt-kettle geometry and casting condition.

(1) $T_c = E/R\ln(A^2\rho QZE/T_c^2\lambda\delta R)$

Where

R = gas constant (1.987 cal/mol),
A = radius of sphere, cylinder, or half-thickness of a slab,
Q = heat of decomposition reaction,
Z = pre-exponential factor,
E_a = energy of activation,
ρ = density,
λ = thermal conductivity,
δ = shape factor (0.88 for infinite slabs, 2.0 for infinite cylinders, 3.32 for spheres).

5.4 Heating Rate: After the equilibration period, the sample is heated at a rate of 3.3 ºC/hour until decomposition occurs or the test is terminated for other reasons, e.g., cracking of the flask due to expansion of the sample.

5.5 Self-Heating Initiation Temperature: The oven temperature trace during that portion of the experiment after the equilibration period will be increasing linearly. Ideally, the temperature traces from the thermocouples in the sample will parallel, and generally, be located below that of the oven. Self-heating or thermal lag associated with the sample will cause these temperature traces to veer towards or away from that of the oven, respectively. This change can be magnified by subtracting the temperature associated with any given thermocouple located within the sample from that of the oven for the dynamic portion of the test. This technique allows one to easily detect the temperature at which self-heating initiates. The delta-temperature values generally form a line with an upward slope when plotted against time until self-heating. At this point the delta-temperature/time plot (referred to as a delta-thermogram) will bend downward, usually very sharply. The self-heating initiation temperature is the temperature at which the slope changes from positive to negative. This initial self-heating is not believed to be a catastrophic event, but a time dependent process producing decomposition products that lead to a catastrophic event.

5.6 Catastrophic Self-Heating: The temperature readings from the thermocouple located at the center of the sample will increase sharply once the catastrophic self-heating process begins, but the temperature associated this process may not easily be determined directly from the temperature/time trace. This process is no doubt time-dependent and may require isothermal experiments to be adequately described.

5.7 Thermal Decomposition Reaction Severity: The response of the energetic material to this thermal insult may vary from a simple expulsion of material from the flask, probably with associated burning, to a more violent process, e.g., explosion or detonation. Sample expulsion may result from simple thermal expansion to mild to violent bubbling due to gases formed during a relatively slow decomposition process.

6. RESULTS AND DATA:

6.1 The following information shall be reported for this test:

i. Temperature/time data from at least two thermocouples for the sample and one for the oven
ii. Graphical representation of temperature-time data.
iii. Delta-thermogram
iv. Self-heating initiation temperature, determined from the thermocouple in the center of the flask
v. Final event temperature
vi. The qualitative characteristics of the thermal decomposition reaction

6.2 Representative data for several explosives are given below.

Explosive	Self-Heating Temperature (°C)	Final Event Temperature (°C)	Severity of Final Reaction
Composition B	143-144	199-206	Partial Detonation
Octol (65/35)	142	167	Burn
RDX Classes 1/5 (80/20) Particulate $\rho = 1.2$ g/cm^3	154	208	Partial Detonation

7. SUPPLEMENTAL INFORMATION:

8. NATIONAL REFERENCES:

a. McKenney, R.L., Jr. and Krawietz, T.R., One-Liter Test: A Mid-Scale Safety Characterization Test for Melt-Castable Explosives, AFRL-MN-EG-TR-1999-7049, Air Force Research Laboratory, Eglin AFB, FL, July 1999.

Top

U.S. 202.01.022

TEST DESCRIPTION

1. TYPE OF TEST: Modified Vacuum Thermal Stability (MVTS) (Constant Temperature)

2. PURPOSE: This test provides an indication of the thermal stability of an explosive at an elevated temperature under initial vacuum.

3. BACKGROUND:

3.1 The standard vacuum thermal stability (VTS) test, developed in the early 1900s, measures the chemical stability of an explosive at an elevated temperature under an initial vacuum for a specific time period. Generally, a weighed sample of explosive (5.00 ± 0.05 g) is sealed in an all-glass apparatus designed to measure gas pressure by the mercury manometric method. The system is evacuated and that portion containing the sample is heated at 100 ºC for 48 hours. The pressure generated by the decomposition gases is measured after the entire system has equilibrated to ambient temperature. The procedure for this standard VTS test is described in U.S. 202.01.001. Some of the problems associated with this simple system have been described in reference (a). Specifically, these problems include (1) the toxic characteristics of mercury and the fragility of the all-glass system, (2) condensation of water due to the experimental setup, (3) potential inaccuracies associated with corrections and (4) time/labor requirements associated with the test.

3.2 The Modified Vacuum Thermal Stability (MVTS) Test provides a continuous pressure/time record for the specific time period of the test. From this the total volume of gas generated at STP can be calculated. Gas chromatographic analysis of this gas provides the identity of the components and their individual volumes. This allows one to distinguish between those gases associated with thermal decomposition and those resulting from the evolution of adsorbed water/solvent.

3.3 An advisory criterion of 2 cm^3 of gas (STP) per gram of sample tested applies for this test. Any explosive that generates more gas than this should be scrutinized carefully before being qualified. Any explosive that may be subjected to temperatures greater than 100 ºC during the course of its normal use must be tested at those temperatures.

4. TEST ARRANGEMENT: The energetic material is contained in a glass tube that is inserted in a calibrated, stainless steel reaction vessel assembly that is connected to a pressure sensor. The entire system is heated in an oven and the real-time pressure/time data are recorded by a computerized data acquisition system. Total gas volume is computed, reduced to STP and supported by gas chromatographic (GC) analysis. Both dynamic and iso-DSC experiments should be carried out on materials believed to be unstable at the standard test temperature of 100 ºC. This procedure minimizes the possibility of a catastrophic event happening in the test apparatus. The apparatus specifications and operating instructions for this test method are documented in AFRL/MNME Technical Memorandum 98-60 (reference (b)).

4.1 Modified Vacuum Thermal Stability Apparatus Description

4.1.1 Reaction Vessel Assembly: The reaction vessel assembly is composed of a lower reaction vessel subassembly and an upper connector subassembly equipped with two sealed valves. One valve is attached to a pressure sensor and the other to a vacuum pump/helium source. The lower subassembly is attached to the upper subassembly through an O-ring face sealed fitting. The upper subassembly is also connected to the helium and vacuum piping systems with the same type fittings. The reaction vessel volume referred to in a later section is that volume below valves A and B in Figure 1.

4.1.2 Pressure Sensor/Heater Assembly: The assembly is composed of a sensor with a calibrated pressure range of 0 to 100 mm of Hg (full scale) and an upper temperature limit of 200 ºC. Each sensor is housed in its own oven that is located external to the main oven where the actual samples are heat-treated. The temperature of each pressure sensor is maintained at the same temperature as that programmed for the experiment, almost always 100 ºC. During the setup for each experiment, which includes at least two evacuation sequences and one helium refill sequence, the oven temperature may drop to around 50 ºC and the pressure sensors to 98 ºC. After this operation, the sensor temperatures equilibrate to 100 ºC in about 60 to 70 minutes and the sensor pressure readings to a constant minimum value at full vacuum in 30 to 40 minutes. The overall pressure change, however, is less than 0.05 mm.

4.1.3 Primary MVTS Oven: The primary oven used to heat soak the MVTS samples is a mechanical convection oven, such as the Model 625 oven manufactured by Precision Scientific. The upper temperature limit of the oven is 325 ºC. All MVTS experiments are carried out at 100 ºC unless otherwise specified. The maximum temperature variation over the 48-hour time period of the test is ± 0.1 ºC.

5. PROCEDURE:

5.1 Heating Operation

5.1.1 Pre-test Drying/Conditioning: Relatively non-volatile powdered energetic materials, e.g., RDX, HMX, NTO, etc., are dried at temperatures between 40 and 60 ºC for a minimum of two hours under vacuum. Drying of volatile powders or PBX-type formulations is not mandatory, but may be accomplished in the same temperature range at atmospheric pressure. Reaction vessels and glass tube inserts are dried prior to use. Pre-test exposure of the reaction vessel and inserts to the laboratory atmosphere during sample loading is kept to a minimum.

5.1.2 MVTS Test Procedure: Three samples, either powdered or pieces (PBX formulations), are weighed into glass sample tubes, placed into stainless steel reaction vessels and connected to the three pressure transducers and the vacuum system. These are then evacuated to a pressure less than 10 microns and refilled to atmospheric pressure with helium a minimum of three times. In addition, the power to the oven is in the off position with the oven door open while the pressure transducer heaters are maintained at 100 ºC. If samples with volatile components are being tested, the reaction vessels are cooled with an ice and water bath during this procedure. After the final refill the reaction vessels are re-evacuated to a pressure of less than 10 microns and closed off from the vacuum pump. Upon completion of the start-up procedure the oven door is closed and the power returned to the oven (temperature setting is preset). The samples are heated for a total of 2910 minutes (one-half hour to reach 100 ºC and 48 hours at temperature). During this 2910-minute time period pressure and temperature data are recorded every 5 minutes by the computerized data acquisition system. At the completion of the test the reaction vessels are cooled to < -15 ºC by use of a salt/ice bath. This latter procedure ensures that all energetic material is removed from the dead volume and condensed into the sealed portion of the reaction vessel.

5.2 Gas Analysis

5.2.1 The gaseous content of the reaction vessels is analyzed by gas chromatography, using a standard gas chromatograph. This test procedure was developed by using a Varian Model 3400 gas chromatograph equipped with a thermal conductivity detector and a stainless steel column, 9 feet long by 0.125 inch in diameter. The column is packed with Porapak Q (100/120 mesh). Helium is used as the carrier gas (flow rate of 40 cm^3/min). The total volume of gas generated during the 48-hour heating period is pushed onto the

column by using the carrier gas. The column is maintained at -98 ºC for 8 minutes then heated at 5 ºC/min to 200 ºC.

5.2.2 The volumes of gases typically observed during vacuum thermal stability testing were calibrated by using the external standard method and a 1 cm^3 sample loop. Standard calibration gases are: H_2 (4.03%), N_2 (4.98%), O_2 (5.01 %), CO (4.98%), CH_4 (4.03%) and CO_2 (4.99%) in helium and N_2O (10.00%) and NO (100.00%). The volume of water generated/desorbed from the energetic sample is calculated by difference ($Volume_{pressure}$ - Volume of Calibrated $Gases_{GC}$).

6. VOLUME CALCULATION PROCEDURE: The total gas volume, obtained at 100 ºC then reduced to standard conditions, is calculated from the total pressure by using equation (1):

(1) $VST_P = (P_f - P_I)(273.2)(V_{rt} - V_s)/(760)(T_{oven} + 273.2)$

where:

P_f = final pressure (mm)
P_I = initial pressure (mm)
V_{rt} = reaction tube volume (cm^3)
V_s = sample volume (cm^3)
T_{oven} = oven temperature (ºC).

7. DATA COMPARISON USING RDX CLASS 1 AND HMX CLASS 2:

7.1 RDX Class 1. Fifteen samples of RDX Class 1, obtained from Holston Army Ammunition Plant (Lot # HOL86E515-086), were subjected to MVTS testing. Eight tests were carried out with one-gram samples and seven with quarter-gram samples. Nine of the samples were vacuum dried 72 hours at 33 ºC (3 each) and at 40 ºC (6 each)] and six were used without pretest drying. The results are shown in Table I. The mean gas volume from the one-gram samples was 0.032 ± 0.003 cm^3/g, where the deviation is of the mean. The mean gas volume from the quarter-gram samples was 0.025 ± 0.003 cm^3/g, where the deviation is of the mean. The average volume of gas per unit mass of RDX (no class specified) reported by Holston AAP (reference (d)) is 0.08 cm^3/g. Holston AAP uses the standard vacuum thermal stability test method (mercury manometric). Additional vacuum thermal stability data from four classes (1,3,4 and 5) of RDX are shown in Table III (reference (d)).

7.2 HMX Class 2. Nine samples of HMX Class 2, obtained from Holston Army Ammunition Plant, were subjected to MVTS testing. Six of the samples were from Lot # HOL86E515-086. All of the samples were subjected to pre-test drying under vacuum. The test results are shown in Table II The mean gas volume was 0.044 ± 0.004 cm^3/g, where the deviation is of the mean. The average volume of gas per unit mass of HMX (Class 1) reported by Holston AAP (reference (c)) is 0.06 cm^3/g. Holston AAP uses the standard vacuum thermal stability test method (mercury manometric).

8. REFERENCES:

a. M. Benchabane, The Discontinuous Vacuum Stability Test (DVST), J. Energetic Materials, 11 (2), 89-100, June 1993.
b. McKenney, Robert L., Jr., AFRL/MNME Technical Memorandum 98-60, Modified Vacuum Thermal Stability Apparatus, 18 December 1998.

c. Personal communication from Mr. Charles Smith of Holston Defense Corporation, Kingsport TN dated 11/796.
d. D.T. Knutson and K.E. Newman, Processing and Vulnerability Evaluation of Batch Manufactured RDX, IHTR 1802, Indian Head Division, Naval Surface Warfare Center, Indian Head, MD, 24 March 1995.

Figure 1. Reaction Vessel Assembly

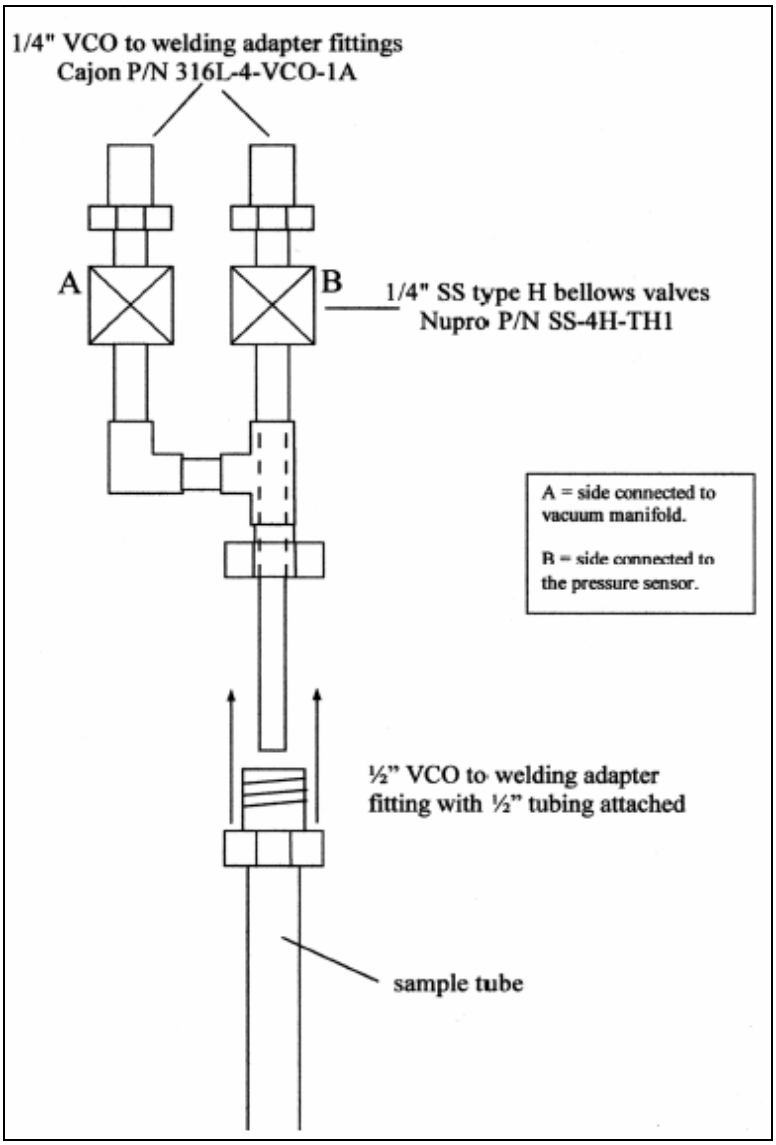

Table I. Modified Vacuum Thermal Stability Data for RDX Class 1
(Holston AAP Lot # HOL86E515-086).

Expt #	Sample Weight (g)	Gas[1] Volume$_{(GC)}$ (cm^3/g)	Gas[2] Volume$_{(Pressure)}$ (cm^3/g)	Water[3] Volume (cm^3/g)
656[4]	1.0020	0.026	0.35	0.33
657[4]	1.0033	0.032	0.40	0.37
668[5]	1.0005	0.030	0.12	0.09
669[5]	1.0003	0.023	0.12	0.10
670[5]	0.9999	0.027	0.13	0.10
650[6]	1.0024	0.025	0.39	0.37
653[6]	1.0032	0.044	0.79	0.75
654[6]	1.0034	0.046	0.88	0.83
	Average:	0.032 s_m ± 0.003		
658[4]	0.2510	0.030	0.28	0.25
665[5]	0.2508	0.017	0.07	0.05
666[5]	0.2501	0.016	0.07	0.05
667[5]	0.2502 0	.020	0.07	0.05
651[6]	0.2410	0.028	0.33	0.30
652[6]	0.2510	0.025	0.27	0.25
655[6]	0.2502	0.038	0.63	0.59
	Average:	0.025 s_m = ± 0.003		

[1]. Gases detected and quantified by gas chromatography were N_2, O_2, CO_2 and N_2O. O_2 is assumed to have resulted from trapped air that was evolved during the 48-hour test. The gas volume shown in column three above is not corrected for the assumed presence of air. All H_2O is assumed to have been desorbed from open, microporosity during the test and is also not included in column three.
[2]. This volume (corrected to STP) is computed from the gas pressure measured at 100 ºC. It includes all volatiles.
[3]. H_2O volume is calculated by subtracting the total gas volume in column 3 from that in column 4.
[4]. Dried at 33 ºC.
[5]. Dried at 40 ºC.
[6]. Not dried. Table II. Modified Vacuum Thermal Stability Data for HMX.

Table II. Modified Vacuum Thermal Stability Data for HMX.

Expt #	Sample Weight (g)	Gas[1] Volume$_{(GC)}$ (cm^3/g)	Gas[2] Volume$_{(Pressure)}$ (cm^3/g)	Water[3] Volume (cm^3/g)
528[4]	1.0020	0.059	0.45	0.39
529[4]	1.0033	0.043	0.62	0.58
530[4]	1.0005	0.052	0.65	0.60
659[5,6]	1.0003	0.047	0.72	0.67
660[5,6]	0.9999	0.054	0.76	0.71
661[5,6]	1.0024	0.057	0.74	0.68
671[6,7]	1.0032	0.024	0.19	0.17
672[6,7]	1.0034	0.032	0.20	0.17
673[6,7]	1.0010	0.028	0.19	0.16
	Average:	0.044 s_m ± 0.004		

[1]. Gases detected and quantified by gas chromatography were N_2, O_2, CO_2 and N_2O. O_2 is assumed to have resulted from trapped air that was evolved during the 48-hour test. The gas volume shown in column three above is not corrected for the assumed presence of air. All H_2O is assumed to have been desorbed from open, microporosity during the test and is also not included in column three.
[2]. This volume (corrected to STP) is computed from the gas pressure measured at 100 ºC. It includes all volatiles.
[3]. H_2O volume is calculated by subtracting the total gas volume in column 3 from that in column 4.
[4]. Dried at 57 ºC for 96 hours under vacuum.
[5]. Dried at 33 ºC for 72 hours under vacuum.
[6]. Class 2 (Holston AAP Lot # HOL77G240-002).
[7]. Dried at 40 ºC for 144 hours under vacuum.

Table III. RDX Vacuum Thermal Stability Test Data (Reference 3)

RDX[1] Class	RDX Process/Type[2]	Volume[3] (cm^3/g)
1	Continuous	0.33
	Batch	0.39
3	Continuous	0.32
	Batch	0.36
4	Continuous	0.19
	Batch	0.27
5	Continuous	0.18
	Batch	0.11
3	Arbitrary control sample	0.18

[1]. RDX obtained from Holston Army Ammunition Plant.
[2]. Refers to continuous and batch processed RDX.
[3]. 100 ºC for 48 hours.

Top

TEST INFORMTION SHEET

1. TYPE OF EXPLOSIVE: High Explosives, Propellants, and Pyrotechnics

2. TEST TITLE: Explosion Temperature Test (U.S. Army ARDEC Method)

a, Type of Test: This thermal test is used to determine the 5-second time-to-explosion.

b. Description: Apparatus used for this test includes: a barricaded press with a die for loading 40 milligrams of explosive sample into a No. 8 blasting cap; a crimper; a furnace with a molten wood's metal bath and shield; associated temperature measurement and controls; a timer.

Place an empty blasting cap into the loading fixture. (die). Weigh out 40 mg of sample and pour into blasting cap using loading funnel. Insert a copper gas check, open side up, into cap and manually push the gas check down to bottom of cap using a rod. Put 30 mg talc in cap, insert second gas check and push down to bottom of cap using a rod. Apply 230 pound loading force for 10 seconds to consolidate material in cap. Repeat loading of blasting caps to obtain sufficient number (usually 25) for test.

Push loaded blasting caps into crimper one at a time. Slowly lower handle of crimper until stop is reached and raise handle. Remove blasting cap from crimper. Heat the wood's metal bath to desired temperature. Rotate sample holder to loading position. Reset timer to zero. Insert loaded cap into fixture. Grasp handle and rotate fixture to allow sample to be immersed into bath. When an explosion occurs, the timer, which is connected to a microphone, is stopped. Record the time to explosion and corresponding temperature. Repeat this procedure for various temperatures to obtain times to explosion in a range from about 3 seconds to about 7 seconds. The maximum temperature for this test is 500 °C.

c. Information Requirements for Assessment: The 5-second time to explosion is determined as follows. Plot the data on semi-log paper, the logarithm of the time-to-explosion versus the reciprocal of the temperature in degrees Kelvin. This results in a straight line. A linear least square curve fit program is used to determine the temperature value, in degrees C, for the 5-second time-to-explosion.

d. Typical Results:

e. Repeatability and Reproducibility:

3. NATIONAL REFERENCES:

a. MIL-STD-650 Method T515.1.

#Top

TEST INFORMATION SHEET

1. TYPE OF EXPLOSIVE: Primary Explosives

2. TEST TITLE: Hot Wire InitiabilityTest

a. Type of Test: Hazard Assessment.

b. Test Description: Sixty P-12 plugs (BuOrd Drawing 1386180) are bridged with a 0.0005 Nichrome wire. A charge holder with a 0.1-inch-diameter charge hole (BuOrd Drawing 1417759) and insulator (BuOrd Drawing 1417758) are attached, and 20 mg of the primary explosive at is pressed in at 5,000 psi. Thirty plugs are fired in a continuous constant current Bruceton test (current applied for 10 seconds in arithmetic steps of 10 ma, current constant to ± 2%) and thirty in a capacitor discharge Bruceton test using a 0.1 mfd capacitor and 0.03 log unit voltage steps. The test is repeated using 60 plugs with 0.001 diameter Nichrome wire.

c. Information Requirements for Assessment: Record the number of detonations for each test condition and calculate the means and standard deviations.

d. Typical Results: Data are compared to normal lead Styphnate (MIL-L-757) or Dextrinated Lead Azide Type I (MIL-L-3055), measured contemporaneously with the candidate explosive.

e. Repeatability and Reproducibility: Good

3. NATIONAL REFERENCES:

d. NAVORD OD 44811, Method 1.5.7 pg 1-20, 1 January 1972.

Top

TEST DESCRIPTION

1. TYPE OF TEST: Thermal Detonability (Slow Cook-Off) – Modified NAWC (China Lake) Method

2. PURPOSE: A safety-oriented test designed provide information related to self-heating and the reaction violence of a cased munition item subjected to slow heating, such as might occur if the munition was located near, but not in direct contact with a fire. The time/internal temperature relationship for the entire test is documented.

3. BACKGROUND: The test provides a means for gauging the response of an ordnance item to slow cook-off conditions that may be caused by the close proximity of a fire. The test is carried out by using approximately one pound of energetic material. The heating rate of the test, relative to the sample size, is such that no significant thermal gradient exists in the sample prior to the onset of self-heating. However the sample size is large enough for the energetic material near the center of the billet to undergo a measurable thermal event prior to catastrophic, and often violent, final event. This is characteristic of the reaction to a slow heating process that may occur in large charges located in artillery projectiles, warheads, rocket motors, and bombs.

4. TEST ARRANGEMENT:

4.1 Sample Holder: The sample holder is a mild steel (SAE 1015 – 1020) cup 2.75 inches in diameter and 5.00 inches in height. The walls and bottom of the sample cup are 0.125 inch thick. The sample cup is lined with a suitable liner material, typically asphaltic hot melt (AHM) to a thickness of approximately 0.125-inch. A 1.00-inch thick top cap is threaded (3.125 – 20) onto the sample cup. The top cap is 4.00-inches in diameter and threads enter into the cap to a depth of 0.25 inches. A tapped hole (0.250 – 20) in center of the top cap allows for insertion of a stainless steel shrouded K-type thermocouple to be inserted into the middle of the test charge. The sealed sample cup is then inserted between two 5-inch square 0.50-inch thick witness plates. The witness plates are fastened together by use of 4 each 9-inch long 0.500 - 13-threaded rods.

4.2 Sample Heater: While the method used for heating the SCO hardware containing the sample is optional, this facility utilizes a disposable, plywood (5/8-inch thick) oven. It is equipped with a four-element electric resistive heater that is driven by an Omega Proportional Temperature Controller, Model 650. The four elements are mounted horizontally between the back wall of the oven and a baffle separating them from the main section containing the one-liter flask. The height of the baffle is 14 inches thereby allowing a one-inch wide gap at the bottom and top for air circulation through the main oven chamber. The elements are placed approximately 8 inches above the floor in a rectangular volume with width, height and depth dimensions of 16, 16 and 6 inches. The inner blade assembly of a small, disposable, double-bladed fan circulates air through the main chamber of the oven by pushing the air through the heated elements. The front door of the oven consists of two 0.375-inch thick glass panes positioned 0.5-inch apart. The panes are held in place by grooves cut into the plywood. The glass front allows the reaction flask to be observed by video camera during the test. The top of the oven is sectioned parallel to the door about mid-way to the rear. The oven is pre-conditioned prior to the test by holding the internal portion at approximately 110 °C for 24 hours. This procedure essentially degasses and slightly chars the internally exposed wood minimizing the clouding of the inside surface of the glass during the early part of the test. After heat conditioning, all seams in the oven are sealed with a heat-resistant, siliconized caulking material. The inside of the oven is lighted during the test by using an externally placed floodlight.

4.3 Data Acquisition: Thermocouple data are collected by using a commercially available program capable of measuring voltage that is converted to temperature (ºC). The data are grabbed at predetermined time intervals (time interval is at the discretion of the researcher). The recommended grab time is every 15
seconds. Temperature data should be supported by video data that are acquired for the length of the test. This combination helps in data interpretation and reaction violence.

5. PROCEDURE:

5.1 Sample Loading/Preparation: A billet of energetic material (2.25-inch diameter, 4.25-inch long and having a 0.125-inch diameter hole extending 1.125-inches into the billet) is inserted inside the line sample cup and sealed by tightening of the top cap. The small cook-off bomb is secured between witness plates. The inside thermocouple is inserted and sealed in place with a swagelok-type fitting.

5.2 Sample Conditioning: It is advantageous to have the system under equilibrium conditions once the dynamic portion of the test is initiated. This requires that any melt-castable sample be in the molten state to ensure that the temperature/time slope change associated with the self-heating process is not masked by the slope change associated with the melting process. With this in mind, the sample is heated at the maximum rate (approximately 5 °C min^{-1}) to a predetermined conditioning temperature that is above the melting/processing temperature and held until the sample (center thermocouple) and oven temperatures equilibrate (normally 5 to 7 hours). This conditioning (hold) temperature can be as high as 50 to 60 °C below that of the predicted critical temperature (T_c), but is usually 100 °C. By completion of this isothermal period the continuous phase (binder portion) of the sample should be in the molten state.

5.3 Sample Heating: At the completion of the conditioning period, the sample is heated at a rate of 3.3 °C $hour^{-1}$ until observable thermal decomposition occurs or the test is terminated for other reasons.

5.4 Thermal Decomposition Reaction Severity: The response of the energetic material to this thermal insult may vary from a simple expulsion of material from the small cook-off bomb (with expulsion of the inner thermocouple), likely with associated burning, to a more violent process, e.g., explosion or detonation. Sample expulsion may result from simple thermal expansion to mild to violent bubbling due to gases formed during a relatively slow decomposition process.

6. RESULTS AND DATA:

6.1 Temperature Data Manipulation: Three temperature-time profiles are used during the analysis of the data. The first is a direct plot of the time versus temperature for the oven and sample thermocouples. The second profile, denoted as the "Δ Oven-Sample" plot, provides the time versus the difference between the oven and sample thermocouples and shows the onset of self-heating as a plateau in the plot, where the sample and oven heating rates are roughly equivalent. In some cases, this plot also shows a downward break following a significant period of self-heating, indicating a mechanistic change in the decomposition reaction. In cases where a discontinuity in the "Δ Oven-Sample" plot is observed, the onset of self-heating (plateau) is reported as the "non-catastrophic self-heating" and a downward discontinuity, if observed, is referred to as "catastrophic self-heating". The last profile, denoted as the "ΔΔ plot", provides the time versus the derivative of the oven-sample temperature difference. This "ΔΔ plot" is smoothed using a 20-point moving average in order to reduce experimental noise. The temperature and time associated with the onset of self-heating can then be readily determined as the point when the oven-sample difference becomes negative. At this point in time the sample is heating faster than the oven (i.e., self-heating). This method generally provides detection of self-heating at earlier times and lower temperatures than visual methods relying upon raw data or oven-sample temperature difference.

6.2 Thermal Diffusivity Determination: While this test is primarily concerned with determining the onset of self-heating and the overall violence of reaction under confined conditions, the slow, uniform heating of the sample also provides for determination of an explosive's *apparent* thermal diffusivity (α, $cm^2\ s^{-1}$) in the molten state prior to self-heating. Since the sample dimension is well defined (radius, cm), and if the heat capacity (C_p, $J\ {}^oC^{-1}\ g^{-1}$) and density (ρ, $g\ cm^{-3}$) of the explosive are known or can accurately be estimated/measured, the thermal diffusivity, and hence thermal conductivity ($\lambda = \alpha C_p \rho$, where λ, has units of $J\ cm^{-1}\ s^{-1}\ {}^\circ C^{-1}$) can be determined from the available cook-off data. This is shown for the case of cylindrical geometry in the following equation:

$$\alpha = r^2 H / 4 (T_{oven} - T_{sample})$$

where r is the sample radius, H is the heating rate, and T_{oven} and T_{sample} are the oven and sample temperatures, respectively. The determined value of thermal diffusivity utilizing this approach is actually the total of the explosive's energy transport due to thermal diffusivity and convective flow provided by density gradients, hence the usage of the term apparent.

6.3 Prediction of Self-Heating Temperature: The Frank-Kamenetskii equation can be used to predict the self-heating temperature for an energetic material of a specific size and configured in a specific geometry. See One-Liter Cook-Off test (U.S. 202.01.021) for detailed description.

6.4 The following information shall be reported for this test:

i. Temperature/time data from the two thermocouples (internal and oven thermocouples)
ii. Graphical representation of temperature-time, Δ temperature-time and $\Delta\Delta$ temperature-time data.
iii. Temperatures of non-catastrophic and catastrophic self-heating and the final event
iv. Reaction violence (with photographic evidence of case components)

6.5 Representative data for several explosives are given below.

Explosive	Temperature (°C)			Severity of Final Reaction
	Non-Catastrophic Self-Heating	Catastrophic Self-Heating	Final Event	
Composition B	146	168	197	R-9 Partial Detonation
TNT	164	190	219	R-3 Deflagration

7. SUPPLEMENTAL INFORMATION:

8. NATIONAL REFERENCES:

a. Pakulak, J.M., Jr. and Anderson, C.M., "NWC Standard Method for Determining Thermal Properties of Propellants and Explosives", NWC TP 6118, Naval Weapons Center, China Lake, CA, March 1980.

b. McKenney, R.L., Jr. and Krawietz, T.R., "One-Liter Test: A Mid-Scale Safety Characterization Test for Melt-Castable Explosives", AFRL-MN-EG-TR-1999-7049, Air Force Research Laboratory, Munitions Directorate, Eglin AFB, FL, July 1999.

Top

TEST INFORMATION SHEET

1. TYPE OF EXPLOSIVE: Liquid Propellants

2. TEST TITLE: U-Tube Adiabatic Compression Sensitivity

   a. Type of Test: Hazard Assessment/Sensitivity.

   b. Description: The U-tube adiabatic compression tester consists of a U-shaped tube closed at one end and containing a slug of test liquid in the curvature of the tube. The test is conducted by suddenly pressurizing the open end of the tube, which forces the liquid slug violently into the closed end. Peak pressures many times greater than the driving pressure are attained in the closed end of the tube. The rate of pressurization is fast enough to provide adiabatic compression.

   c. Information Requirements for Assessment: Data required for processing and testing

   d. Typical Results: Results are presented in psig or as a pressure ratio (Pi/Pa) where Pi is the driving pressure and Pa is the local ambient pressure. Ethyl or propyl nitrate are utilized as calibration standards.

   e. Repeatability and Reproducibility: Results are repeatable within 5%.

3. NATIONAL REFERENCES:

   a. AFRPL-TR-66-294.

#Top

TEST INFORMATION SHEET

1. TYPE OF EXPLOSIVE: High Explosives, Propellant, and Pyrotechnics

2. TEST TITLE: Compatibility with Materials Test

a. Type of Test: Hazard Assessment/Sensitivity.

b. Description: Used for determine the reactivity of explosives in contact with materials used in production and in munition designs.

(1) High Explosives: Normally, the Vacuum Thermal Stability Test AOP-7 Registry No: U.S. 202.01.001 is used. Typically, the explosive and the materials are subjected to 100°C for 48 hours. For materials like HNS, the test is performed at higher temperatures. DSC or DTA may also be used.

(2) Propellants: Most frequently the Taliani, Vacuum Stability, or Differential Thermal Analysis (DTA) is used. Generally the AOP-7 Registry No: U.S. 202.01.001 test is used.

(3) Pyrotechnic Compositions: Compatibility tests are designed around the materials and potential contaminants. In general, the vacuum thermal stability tests AOP-7 Registry No: U.S. 202.01.001 is used.

c. Information Requirements for Assessment: Reactivity of explosives with materials that may be in close proximity.

d. Typical Results: No more than 2.0 ml/gm/48 hours is allowed.

e. Repeatability and Reproducibility: Normally repeatable results are obtained.

3. NATIONAL REFERENCES:

a. MIL-STD-650, 31 May 1973.
b. NAVORD OD 44811, pp. 1-14, 1 January 1972.
c. MIL-STD-286C, "Military Standard, Propellant, Solid, Sampling, Examination and Testing", 8 January 1999.
d. MIL-STD-2100 (OS), "Military Standard, Propellant, Solid, Characterization of", 30 March 1979.
e. McLain, Joseph H., Pyrotechnics, The Franklin Institute Press, Philadelphia, PA (1980).
f. Ellern, Herbert, Military and Civilian Pyrotechnics, Chemical Publishing Co., Inc., New York, NY (1968).

#Top

TEST DESCRIPTION

1. TYPE OF TEST: Thermal Stability (Constant Temperature) - Chemical Reactivity Test (CRT)

2. PURPOSE: This test evaluates the stability of an explosive at an elevated temperature under vacuum. Both the volume of gas evolved and the composition of these gases are determined.

3. BACKGROUND: The Chemical Reactivity Test (CRT) was developed to provide a means for measuring both the type and volume of gas evolved by a substance or mixture of substances when subjected to elevated temperatures in a fixed volume under vacuum. As such, it provides significantly more information than the vacuum thermal stability test procedure as described in U.S. 202.01.001.

4. TEST ARRANGEMENT:

4.1 Apparatus:

4.1.1 A Hewlett Packard Model 5890 Series II gas chromatograph with a Model 3396 integrator is used to analyze the gas sample. A 20k by 1/8l OD Porapak Q 50-80 mesh molecular sieve is used in the chromatograph. Helium that has been passed through a liquid nitrogen cold trap is used as the carrier gas.

4.1.2 A tank containing heated silicone brake fluid is used to heat the sample under test. Silicone brake fluid is used because it has low volatility and is thermally stable. A temperature control unit that heats and circulates the fluid is attached to the tank. Temperature of the bath is maintained up to 120 ºC by the control unit to within 1°C of the set point.

4.1.3 Sample holder vessels called “loops” comprise the following stainless steel components: a sample holder with a valve, a diffusion plug (used as a weight), a diffusion upper spacer, a crucible, and a lower spacer. Figure 1 provides a schematic of the CRT sample holder loop assembly.

4.1.4 Vacuum is applied by a vacuum pump system capable of evacuation down to approximately 10 millitorr.

4.2 Materials:

4.2.1 A pressurized gas bottle containing small percentages of N_2, NO, N_2O and CO_2 which are used as calibration gases.

4.2.2 A pressurized gas bottle containing ultra pure (99.999%) helium that is used as a carrier gas.

4.2.3 PBX-9404 is used as the standard reference explosive for the system. PBX-9404 contains 95% TATB and 5% Kel-F as the binder.

5. PROCEDURE:

5.1 Sample preparation:

5.1.1 The CRT is normally run on an explosive composition as a powder unless it is a paste or cast/cure PBX. Consolidated powders (pressed pellets) are generally not attempted. The sample size for the material being tested is 0.250 g. For compatibility tests, both ingredients are weighed to 0.250 g and then blended together. In general, duplicate samples are prepared and run for all materials being tested.

5.1.2 Samples are placed in the loop assembly and the loop is evacuated with vacuum until all out gassing stops. If necessary, the sample may be flushed with helium. The sample loop is then backfilled with one atmosphere of helium.

5.1.3 The sample loop is removed from the vacuum system and placed into the silicon bath holder at 120 ºC. At the end of the 22-hour heating cycle, the sample loop is removed from the bath and allowed to come to ambient temperature prior to running the gas analysis.

5.2 Sample gas analysis:

5.2.1 The gas chromatograph is calibrated with a calibration gas containing a small percentage of each of the gases being analyzed. In addition, PBX-9404 is routinely run as the standard explosive composition.

5.2.2 The sample loop is connected to the chromatograph and after the chromatograph has stabilized, the sample loop valve is opened and the analysis started. Prior to running a duplicate sample, the air must also be evacuated in the sample loop holder.

6. RESULTS AND DATA:

6.1 Criteria and methods for assessing results: A test result is considered positive, i.e., thermally unstable, if ignition or an explosion occurs. If the CRT gas volumes produced are in excess of 4 cm^3/g (approximately 0.8% decomposition), additional tests may be required to determine if the material is thermally unstable. This includes running the test at 100 ºC and/or increasing the time to 48 hours. If the gas volume produced is less than 4 cm^3/g, the material is considered thermally stable. For reference purposes, 1 cm^3 of evolved gas/gram of explosive represents about 0.2% decomposition (see ref. (a)).

6.2 Compatibility:

6.2.1 If the CRT gas volume of the mixture is equal to or less than the sum of the individual components, there is no evidence of chemical reactivity and the mixture is considered chemically compatible and unreactive.

6.2.2 If the CRT gas volume of the mixture is significantly greater than the sum of the individual components, there is evidence of chemical reactivity and the mixture should be considered incompatible. Generally, total gas volumes of the mixture that are greater than 1.0 cm^3/g are moderately reactive and the materials are considered incompatible.

6.3 Typical results: Typical individual gas evolution results for several energetic materials are provided in Table I. Units are listed in cm^3/0.25 g @ 120 ºC for 22 hours.

7. SUPPLEMENTARY INFORMATION:

8. REFERENCES

a. Prokosch, David W., et al., Chemical Reactivity Test for Thermal Stability, UCRL-JC-117941, July 1994.

Figure 1. CRT sample holder “loop” assembly. All loop components are made of stainless steel.

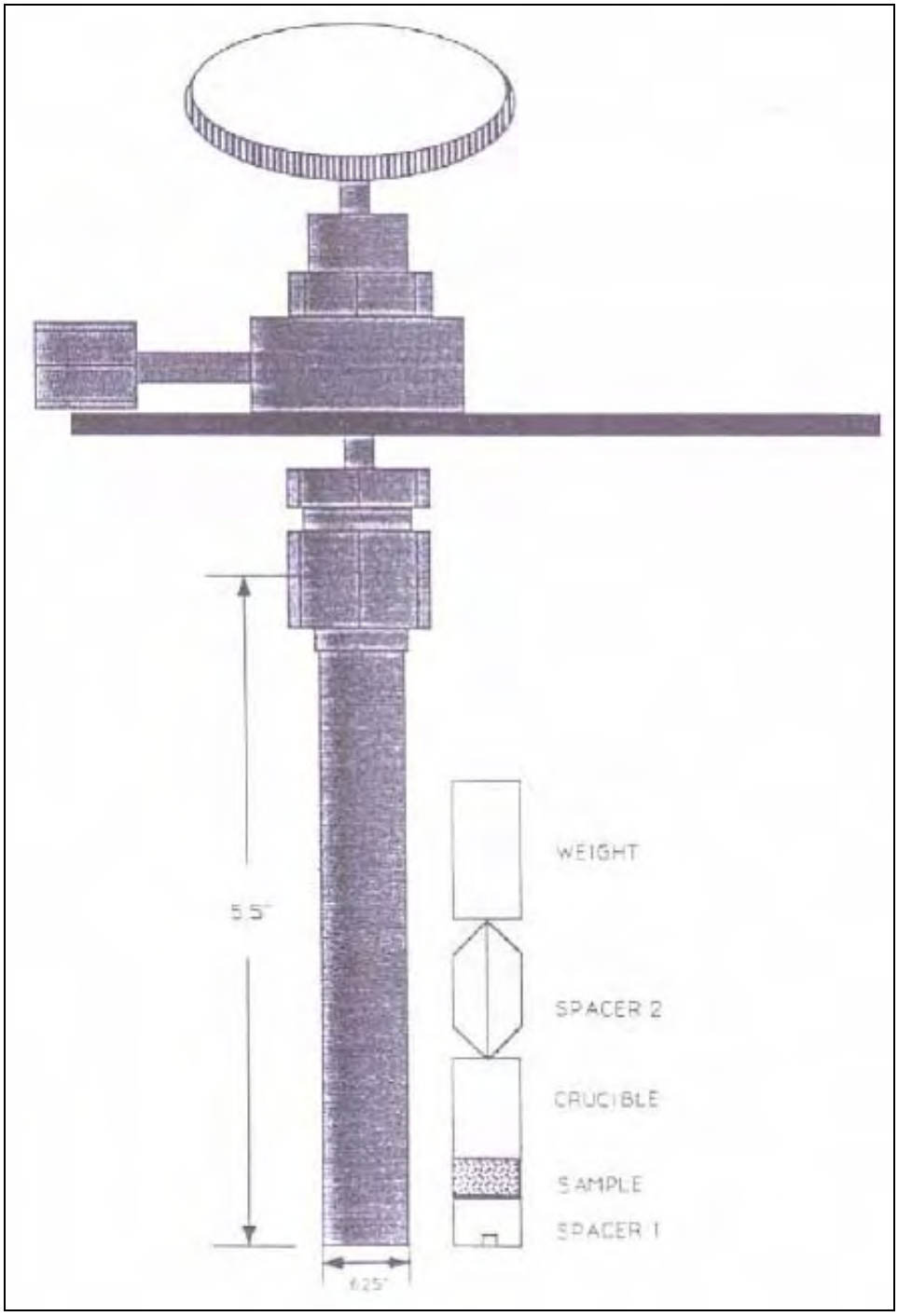

TABLE I. Typical test results

Explosive Material	N_2	O_2	CO	NO	CO_2	N_2O	Total
PETN (powder)	0.046	0	0.038	0.080	0.131	0.014	0.309
PETN (pellet)	0.013	0	0.011	0.028	0.069	0.005	0.126
Comp B (powder)	0.011	0	0	0.024	0.039	0.018	0.092
Comp B (pellet)	0.014	0	0	0.021	0.018	0.020	0.073
LX-14 (powder)	0	0	0	0	0.053	0.006	0.059
LX-14 (pellet)	0	0	0	0.004	0.016	0.006	0.026
LX-17 (powder)	0	0	0	0	0.023	0	0.023
LX-17 (pellet)	0	0	0	0	0.042	0	0.042
PBX-9404 powder)	0.020	0	0.039	0.244	0.137	0.023	0.463
PBX-9404 (pellet)	0.056	0	0.049	0.171	0.198	0.039	0.513

Top

TEST INFORMATION SHEET

1. TYPE OF EXPLOSIVE: Propellants

2. TEST TITLE: Environmental Impact of Firings

   a. Type of Test: Hazard Assessment/Toxicity.

   b. Description: An environmental impact assessment based on the products in the expanded after plume zone is prepared. Effects at sea level and intermediate or high altitudes, if applicable, are considered. Noise and electromagnetic (radar) attenuation are not factors in this assessment. Primary and secondary smoke and handling toxicity, if applicable, are considered qualitatively.

   c. Information Requirements for Assessment: This test determines the impact on the environment of firing the propellant.

   d. Typical Results: Varies. Depend on materials tested.

   e. Repeatability and Reproducibility: Varies

3. NATIONAL REFERENCES:

   a. MIL-STD-2100 (OS), "Military Standard: Propellants, Solid, Characterization of", 30 March 1979.

#Top

U.S. 301.01.001

TEST INFORMATION SHEET

1. TYPE OF EXPLOSIVE: Propellants

2. TEST TITLE: Theoretical Performance Calculations

a. Type of Test: Performance Assessment

b. Description: Computer programs to calculate thermodynamic properties and performance characteristics are used. Among the programs used are the NWC Thermochemical Program, PEP code, Blake code, and the NASA-Lewis code. The parameters computed are flame temperature, chemical compositions enthalpy, entropy, specific heat ratio and molecular weight in both the combustion chambers and exhaust, frozen and shifting equilibrium, specific impulse, boost velocities, thrust coefficient, characteristic velocity, and exhaust gas velocity.

c. Information Requirements for Assessment:

The data are used to characterize the propellant or pyrotechnic system and in the prediction of the performance.

d. Typical Results: Depend on materials being considered.

e. Repeatability and Reproducibility: N/A

3. NATIONAL REFERENCES:

a. Cruise, D. R., "Theoretical Computations of Equilibrium Compositions, Thermodynamics Properties, and Performance Characteristics of Propellant Systems", NWC TP-6037, Naval Weapons Center, China Lake, CA, April 1979.

b. MIL-STD-2100 (OS), "Military Standard: Propellant, Solid, Characterization of", 30 March 1979.

#Top

TEST DESCRIPTION

1. TYPE OF TEST: Performance - Detonation Velocity

2. PURPOSE: To determine the detonation velocity of an explosive and to characterize the explosive for application, performance, and safety.

3. BACKGROUND: One of the characteristic properties of an explosive composition is its detonation velocity, i.e., the velocity at which a steady state detonation wave will propagate through the material. The detonation velocity depends on the material composition of the explosive, the density at which it is tested, the geometry and dimensions of the test, the presence or absence of confinement, and the nature of any confinement around the charge. The relationship between detonation velocity and charge diameter for cylindrical charges is given by equation (1).

(1) $D_{(d)} = D_{\infty}(1 – a/d)$

Where:

$D_{(d)}$ = Detonation velocity at diameter d
D = D_{∞} (1-a/d)
d = Charge diameter
D_{∞} = detonation velocity at infinite diameter
a = Constant

4. TEST ARRANGEMENT: Numerous methods currently exist for the measurement of the detonation velocity of energetic materials. Rather than provide a description of all tests that are suitable, the following recommendations are provided which can be applied to any of the methods.

4.1 Cast or pressed samples should be prepared in sufficiently large size to minimize the charge diameter effect. If a measurement of the critical diameter has been made, this can give direction to the selection of a suitable charge size. If not, an estimate may be obtained by analogy to known explosives. Detonation velocities may be measured on bare charges or confined charges, but the conditions should always be specified.

4.2 Detonation velocities may be measured either by methods that give a continuous record (e.g., streak camera), or by methods that give measurements at discrete points, as when pin switches are used to record arrival time of the detonation wave. In the latter case more than two pins should be used to give multiple intervals over which to determine the velocity.

4.3 The length of the charge (l) should be sufficient to allow a steady state velocity to be achieved in the charge for a significant fraction of the charge length. In general, a length to diameter ratio of 3/1 is preferred.

5. PROCEDURE:

5.1 As noted above, there are many ways to measure detonation velocity, and the specific procedure to be followed will depend on the test set-up selected.

5.2 Test results should be reported describing average and individual measured velocities, test charge configuration including dimensions, confinement (if any), %TMD, charge density, and booster design. Table I provides a summary of the detonation velocity of several commonly used unconfined explosives.

6. RESULTS AND DATA:

6.1 The following information shall be reported for this test:

a. geometry and dimensions of the
b. nature of any confinement (materials of construction and thickness)
c. method of initiation
   i. booster explosive
   ii. booster geometry and dimensions
   iii. weight of
   iv. density of
d. method of recording the progress of the detonation (e.g., streak camera, framing camera, ionization pins)
e. number of charges for which detonation velocity was measured
f. section of the charge over which detonation velocity was measured
g. individual and average velocities, if multiple measurements were made.

6.2 Table I lists detonation velocities reported for several explosive compositions.

7. SUPPLEMENTARY INFORMATION:

8. NATIONAL REFERENCES:

a. Hall, Thomas N. and Holden, James , NSWC MP88-116, Explosion Effects and Properties, Navy Explosives Handbook, Part III, October 1988.

b. Dobratz, B., Explosives Handbook, Lawrence Livermore National Laboratory, UCRL-52997, January 31, 1985.

TABLE I. Detonation velocity test results.

Explosive	Charge Diameter (cm)	Density (g/cm^3)	Detonation Velocity (m/s)
TNT (Cast)	5.08	1.62	6850
TNT (Cast	6.0	1.62	6980
Pentolite (Pressed)		1.71	7750
Pentolite (Cast)		1.64	7530

#Top

TEST INFORMATION SHEET

1. TYPE OF EXPLOSIVE: Liquid Propellants

2. TEST TITLE: Detonation Velocity - Liquid Explosives

   a. Type of Test: Performance Assessment - Mandatory for Liquid explosives

   b. Description: The procedure for measuring the detonation velocity of liquids and vapor-air mixtures is similar to that described for solid high explosives described in AOP-7 Registry No. U.S. 302.01.001. A detonation tube is used for vapor-air mixtures as described in U.S. 302.03.001.

   c. Information Requirements for Assessment: Steady state detonation velocity.

   d. Typical Results: Depend on materials tested.

   e. Repeatability and Reproducibility: Good.

3. NATIONAL REFERENCES:

#Top

TEST DESCRIPTION

1. TYPE OF TEST: Performance assessment - Critical Diameter

2. PURPOSE: This test defines the threshold, d_c, for the propagation of steady-state detonation.

3. BACKGROUND:

3.1 This test measures the failure threshold; therefore, it is far more easily affected by small variations in the physical properties of the charge. Consequently, charges must be of good quality if reproducible results are to be obtained. The charge preparation recommendations of this document should be used. In general, critical diameter should be reported for unconfined explosive charges.

3.2 There are three closely related techniques for measuring the critical diameter. In the first method, a conical charge is initiated at the large end, and the detonation is followed optically or electronically until it fails. In the second method, a stepped cylinder is initiated at the large end and the progress is followed through various sections. In the third method, a series of cylindrical charges of different diameters are used to map the detonation velocity versus the diameter relationship. By keeping the difference between the diameters small, the average of the smallest diameter charge that gives a steady-state detonation and the largest charge that does not, will give a reasonably accurate value of failure diameter. The first two methods will tend to give estimates of the critical diameter that are smaller than the true critical diameter.

4. TEST ARRANGEMENT: The specific procedure to be used, as described in section 5 below, is at the discretion of the experimenter. In all cases, the sample should be representative of the anticipated service use configuration.

5. PROCEDURE:

5.1 Method 1:

5.1.1 For the conical charge with continuous wire electronic method, an explosive charge is prepared with embedded continuous resistive wires. A copper wire of essentially zero resistance is placed parallel to a nichrome wire (No. 40 wire with a resistance of about 2.3 ohms/cm) of known resistance within the cast explosive. A constant current source of about 200 mA is connected between the copper and the nichrome wires. The detonation front, which has a low resistance, completes the circuit. A voltmeter (oscilloscope) reads the potential difference between the copper and the nichrome wires (see figure 1).

5.1.2 From Ohm's Law (R=E/I), the resistance R of the nichrome wire remaining in the circuit can be obtained. Since the resistance of the nichrome wire per unit length is known, the distance to the detonation front can be determined. The embedded wires, however, do cause perturbations in the threshold conditions and are a source of error for this technique. From the resistance versus time record, the distance versus time data can be calculated. The distance-time data is differentiated to obtain the detonation velocity. Figure 2 displays the detonation velocity versus the position in the cone for a particular charge and shows the decrease in the detonation velocity down to the value at the critical diameter. When the cone angle is known, the value of the critical diameter can be calculated.

5.1.3 To avoid the problems associated with the embedded wires, the detonation may be followed optically with the smear camera. For a steady detonation, the streak is straight. For a failing detonation, the streak is curved and may disappear altogether. With this technique it is not necessary to determine the instantaneous velocity of the detonation from the curved traces. The observation that the trace is definitely curved in the direction of decreasing velocity is sufficient to show that the test diameter is d_c.

This prevents the requirement of differentiation of experimental data. It is important to have a sufficiently long charge because as d approaches d_c, the shock-induced reaction may run for long distances at apparently constant velocity before failure can be seen. Reference (a) provides a detailed description of this test method.

5.2 Method 2:

5.2.1 The most direct method of determining dc is to fire a series of different diameter charges and obtain the smear camera record of each. For castable materials that can easily be prepared as conical charges, the record of the reaction initiated at the cone base will show failure at some diameter of the cone. This measured dc is always too small because in a base initiated conical charge the detonation is overboostered as it progresses to the smaller diameters. The use of a stepped cylinder, instead of a cone, avoids this problem but introduces others. The length of each step or diameter must be about 4d or greater to allow the overboostering to fade out and a sufficient length of steady state propagation to measure detonation velocity (D). The camera cannot view an extremely long charge and still give a record that can yield an accurate value of D. Hence, the stepped cylinder, like the cone, is best suited for obtaining a preliminary and approximate value of d_c. Both of these methods should be followed by more precise measurements on cylindrical charges.

5.3 Method 3:

5.3.1 For measurements on cast cylindrical charges, the charges should be prepared from one uniform batch of explosives. If the charges are prepared from a melt cast explosive, conditions must be carefully controlled to ensure that all charges have the same physical properties. If the charges are pressed, isostatic pressing is recommended in preference to ram pressing. However, this method requires machining the pressings to make cylinders of the required dimensions.

6. RESULTS AND DATA:

6.1 The following information shall be reported for this test

a. geometry and dimensions of the charge
b. nature of any confinement
c. method of initiation
    i. booster explosive
    ii. booster geometry and dimensions
    iii. weight of booster
    iv. density of
d. method of recording the progress of the detonation (e.g., streak camera, framing camera, ionization pins).
e. criterion for determining that the detonation has failed.
f. critical diameter of the candidate

6.2 Table I lists critical diameters reported in references (b) and (c) for several explosives.

7. SUPPLEMENTARY INFORMATION:

7.1 The range in d_c over all explosives is very large. Common pressed explosives have a d_c of about 1 cm or less whereas void less composite propellants may exhibit a d_c of several meters. Very sensitive and energetic explosives usually have very small critical diameters. It is very difficult to make cylinders of

sufficiently small diameter for measurement purposes. These small cylinders may also be difficult to initiate properly. For these materials, the use of U.S. 302.01.004 is recommended. Another technique for sensitive explosives is the measurement of the so-called initial height of a wedge of explosives and to relate the critical height to critical diameter. Use of this procedure is discussed in U.S. 201.04.006.

7.2 From the discussions of this test and the references cited herein, it is clear that there is no well defined test for critical diameter that is applicable to all explosives at all diameters. Therefore, the evaluator of a material may investigate and use other techniques to characterize and define the critical diameter. If other methods are used, a description of that technique should also be provided with the test results.

8. NATIONAL REFERENCES:

a. Jaffe, I. and Price, D., Progress Report on Adaptation of Continuous Wire Method for Measuring Transient Phenomena, NOLTR 63-163 (Sep 1963), U.S. Naval Ordnance Laboratory, White Oak, Silver Spring, MD (now Dahlgren Division, Naval Surface Warfare Center, White Oak Detachment).
b. Hall, Thomas N. and Holden, James, NSWC MP88-116, Explosion Effects and Properties, Navy Explosives Handbook, Part III, October 1988.
c. Dobratz, B., LLNL Explosives Handbook, Properties of Chemical Explosives and Explosive Simulants, Lawrence Livermore National Laboratory, UCRL-52997, January 1985.

#Top

TABLE I. Critical diameters for various unconfined charges.

Material	Density (g/cm^3)	d_c (mm)
50/50 Pentolite (cast)	1.70	6.7
Comp B (A) (cast)	1.71	4.3
Comp B-3 (cast)	1.73	6.2
75/25 Cyclotol (cast)	1.75	6.0 to 8.0
DATB (pressed)	1.72	5.3
PBX-9404 (pressed)	1.82	1.2
Comp A-3 (pressed)	1.63	<2.2
TNT (pressed)	1.63	2.6
PBXN-9 (pressed)	1.73	<2.8
PBXN-7 (pressed)	1.70	<6.4
PBXN-301 (extruded)	1.53	0.36
PBXN-110 (cast)	1.67	6.1

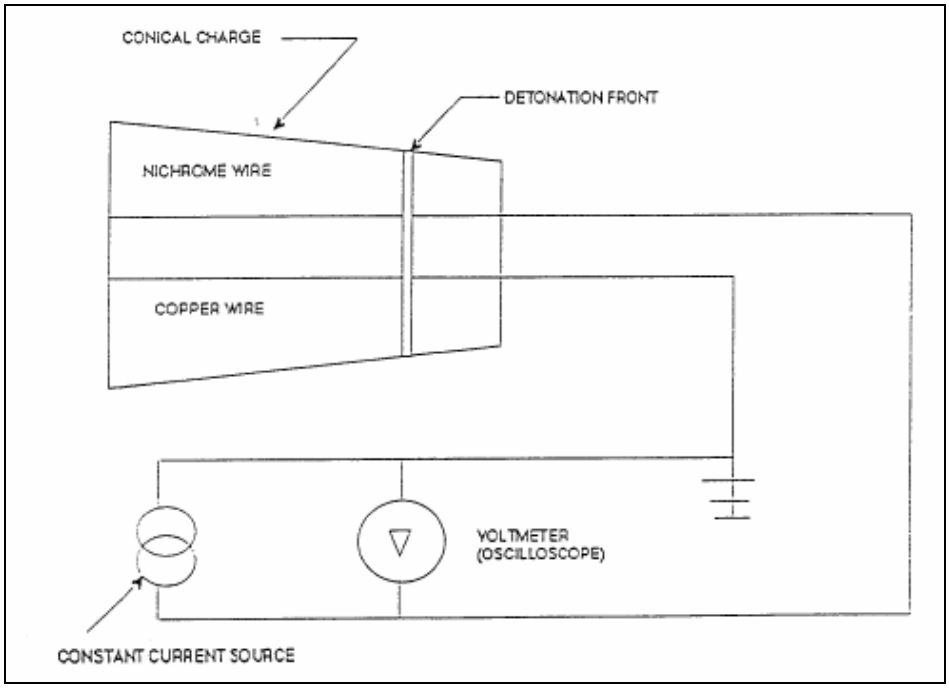

FIGURE 1. Oscilloscope reads the potential difference between the copper and nichrome wires.

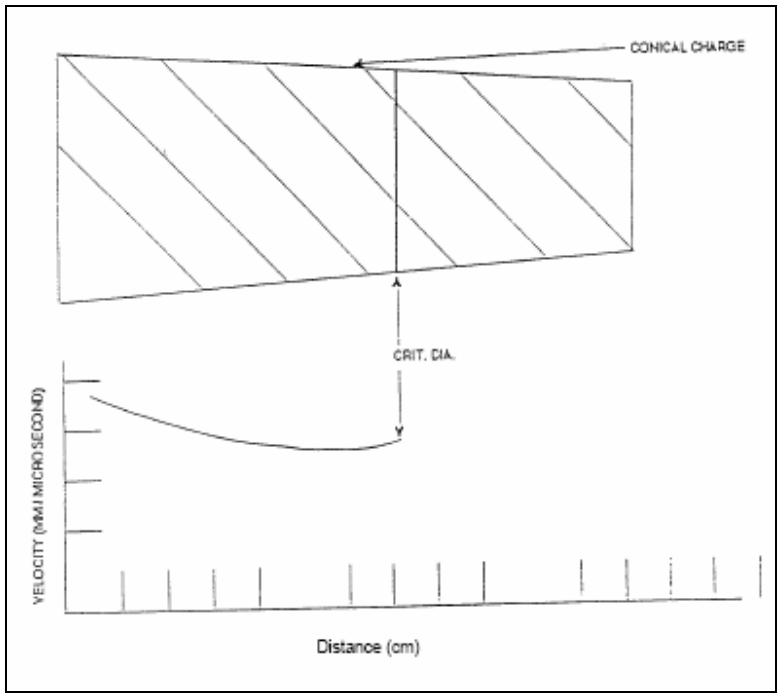

FIGURE 2. Detonation velocity vs. position in the cone.

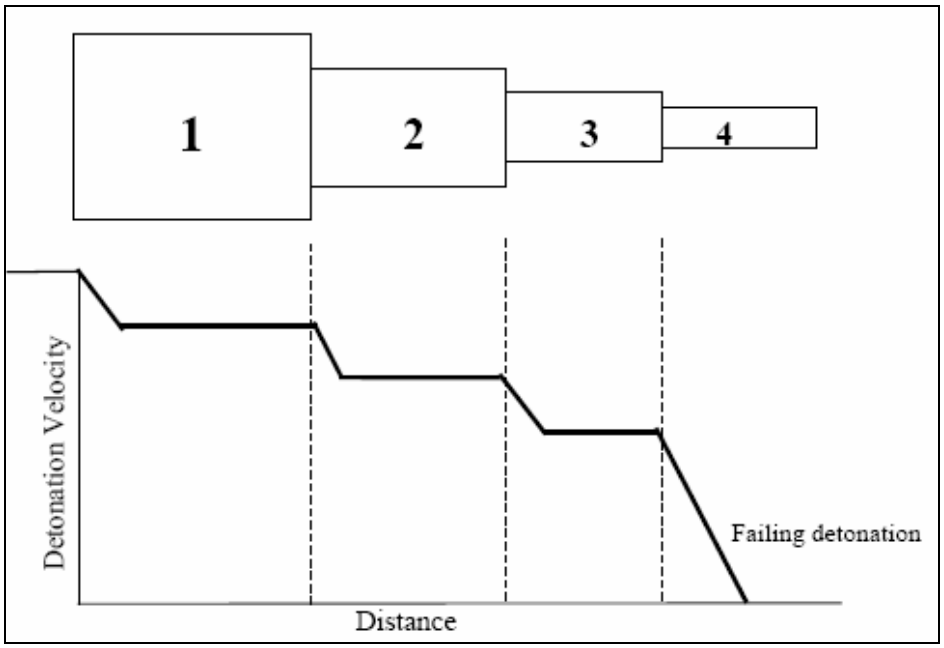

Critical diameter is between the diameters of sections 3 and 4.

FIGURE 3. Change in detonation velocity with decreasing diameter.

#Top

TEST DESCRIPTION

1. TYPE OF TEST: Performance Assessment - Very Small Critical Diameter

2. PURPOSE: This test defines the threshold, d_f, for the propagation of a steady-state detonation. This procedure is applicable to injection loaded explosives that have a critical diameter in the order of 0.010 inch (0.025 cm) or less.

3. BACKGROUND: This test is a failure threshold; therefore, it is more easily influenced by small variations in the physical properties of the charge than is the value of the detonation velocity at larger diameters. Consequently, charges must be of good quality if reproducible results are to be obtained. The test was specifically developed for performing quality assurance studies on the explosive.

4. TEST ARRANGEMENT: The failure thickness is determined by firing three samples in the test arrangement as depicted in figures 1 and 2.

5. PROCEDURE:

5.1 Prior to loading, the base and cover plates should be cleaned to remove any contaminants. The groove of the test item is filled with explosive so that there are no gaps, voids, or inclusions in the loaded channels and that the entire length of the groove is filled with the test material flush to the top. If the explosive composition is a curable explosive, the uncured explosive is loaded into the test hardware and fully cured prior to testing.

5.2 Mount the cover plate on the test sample using an appropriate adhesive. Care shall be taken to ensure that the flat face of the cover plate is in full contact with the surface of the base plate and the test explosive

5.3 Install the mild detonating fuse (MDF) and shock absorbing tubing in the cover plate to ensure that the end of the MDF is in contact with the test explosive.

5.4 After firing the test item, the distance from the reference end of the aluminum cover plate to the end of the detonation imprint (D in figure 2) shall be determined to ± 0.001 inch.

6. RESULTS AND DATA:

6.1 The following information shall be reported for this test:

a. dimensions of the test unit (A, B, and C in Figure 2) to within ±0.001 inch
b. materials of construction of the test fixture
c. failure thickness for candidate explosive

6.2 The failure thickness is calculated as follows:

$$\text{Failure Thickness } (d_f)\text{, inch} = C/D \times (D - B)$$

7. SUPPLEMENTARY INFORMATION:

8. NATIONAL REFERENCES:

a. MIL-E-82740, dated 15 Oct 1986, Explosive, Plastic-Bonded, Injection Moldable (PBXN-301), para. 4.5.6, Failure Thickness.

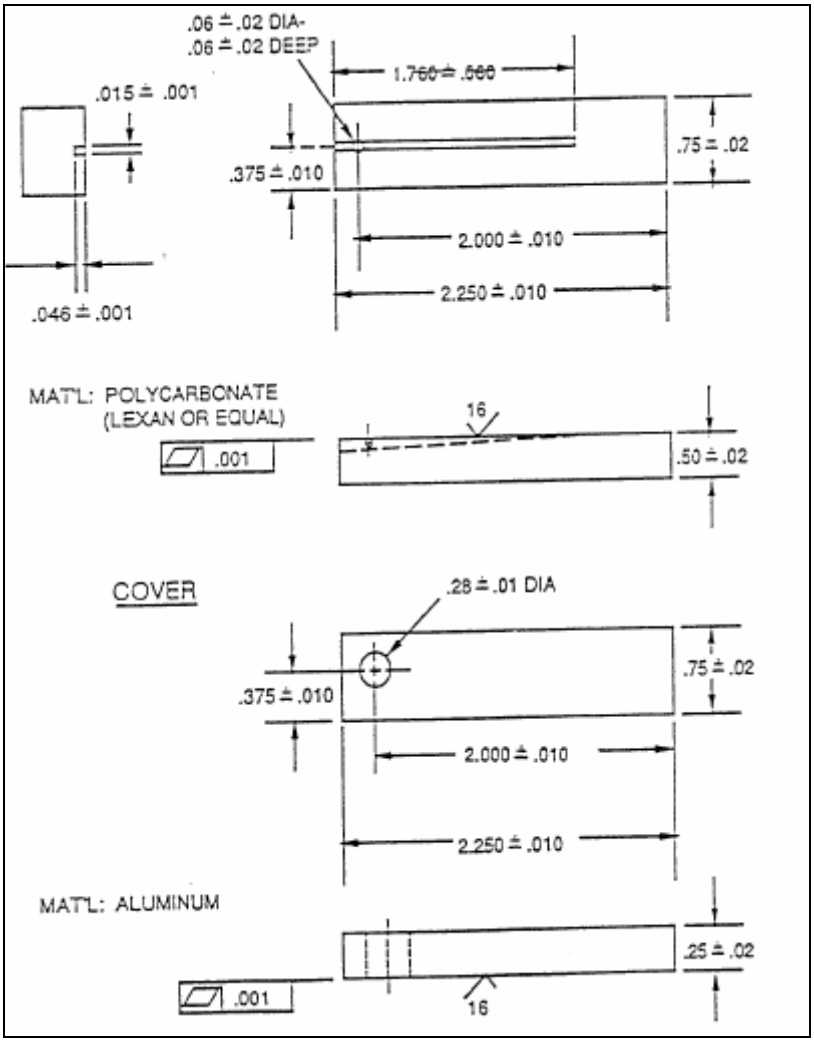

NOTE: All dimensions are in inches.

FIGURE 1. Test hardware base plate.

#Top

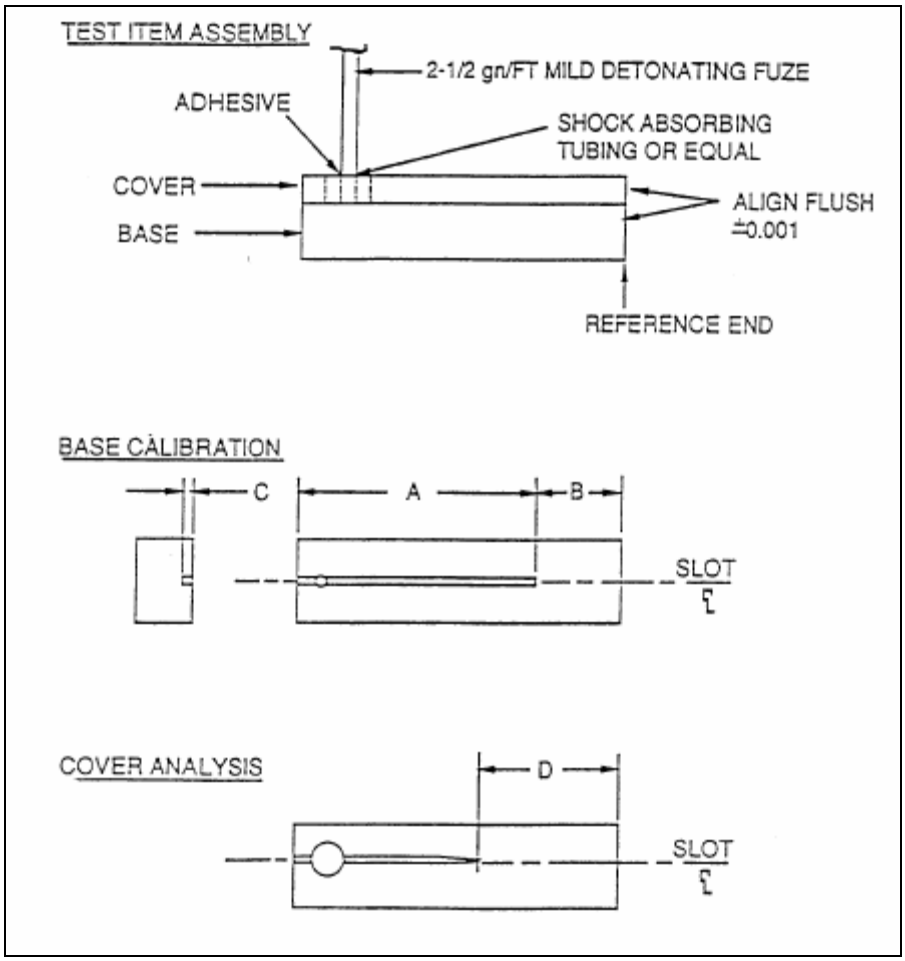

FIGURE 2. Failure thickness, d_f, test assembly.

#Top

TEST INFORMATION SHEET

1. TYPE OF EXPLOSIVE: Propellants

2. TEST TITLE: Strand Burning Rate (Linear Burning Rate)

   a. Type of Test: Performance Assessment.

   b. Description: Strands 15-20 cm long and 0.3-1 cm in diameter are coated with an inhibitor compound to assure vertical burning. Each strand is placed in a jig equipped with fuse wires. Strands are conditioned at -54 ^{o}C (65 ^{o}F), 25 ^{o}C (77 ^{o}F), and 74 ^{o}C (165 ^{o}F) before testing. Test pressures are 500, 1000, 2000, 3000, 4000, 5000 psi. A Crawford type stainless steel Strand Burning Rate Bomb with a volume of about one liter is used. It must have an 0-ring closure and a working pressure of at least 5000 psi. Each unit is hydrostatically tested for 30 minutes at 10,000 psi, is equipped with electrical wiring contacts for ignition and timing, and has an opening for pressurizing and exhausting gases. Temperature conditioning chambers with ranges from -65 ^{o}C (-85 ^{o}F) to +99 ^{o}C (210 ^{o}F), controllable to ± 0.5 ^{o}C (± 1 ^{o}F) must be available.

   c. Information Requirements for Assessment: Data used to calculate motor performance and for quality assurance.

   d. Typical Results: Depend on materials tested.

   e. Repeatability and Reproducibility: Good repeatability and reproducibility over the most of its range. The test is difficult to use when the burning rate exceeds 7.5 cm (3") per second.

3. NATIONAL REFERENCES:

   a. MIL-STD-286B, Method 803.1.1 of 28 August 1991.

   b. MIL-STD-2100 (OS), "Military Standard: Propellant, Solid, Characterization of", 30 March 1979.

#Top

TEST INFORMATION SHEET

1. TYPE OF EXPLOSIVE: Propellants

2. TEST TITLE: Closed Bomb Burning Rate

   a. Type of Test: Performance Assessment.

   b. Description: The closed bomb is a constant- volume, high pressure combustion chamber used to determine the linear regression rate of burning propellant. The bomb volume is usually 100-300 cm. The propellant is loaded in the bomb. The igniter is placed in a small bag with the propellant. An electric match is used to initiate combustion. A piezoelectric pressure transducer measures the pressure rise.

   c. Information Requirements for Assessment: This test determines the quickness and force of a propellant.

   d. Typical Results: Depend on materials tested.

   e. Repeatability and Reproducibility: Good

3. NATIONAL REFERENCES:

   a. MIL-STD-286B, "Military Standard: Propellant, Solid, Sampling, Examination and Testing", Method 801.1 of 28 August 1991.

   b. Round Robin Results of the Closed Bomb and Strand Burner, CPIA Publication 361, July, 1982.

#Top

TEST INFORMATION SHEET

1. TYPE OF EXPLOSIVE: Pyrotechnics

2. TEST TITLE: Burning Characteristics (Configurational)

a. Type of Test: Performance Assessment.

a. Description: The test apparatus, procedure, results and criteria all vary according to the end-item requirements of the pyrotechnic system. Specific criteria are established in terms of end-item performance requirements. These criteria are normally examined in prototype hardware similar to that envisioned in the final design. To this degree, some performance characteristics are examined and pyrotechnic compositions are either modified, accepted, or rejected.

b. Information Requirements for Assessment: Information required to establish final design and specifications.

d. Typical Results: Typical results could be reported in burning times, burning rates, electromagnetic radiation intensity versus burning time, spectral outputs, visual color, obscuration or screening times, or other results that would be specifically related to the pyrotechnic end-item's characteristics required.

e. Repeatability and Reproducibility: Normally repeatable.

3. NATIONAL REFERENCES:

a. McLain, Joseph H., Pyrotechnics, The Franklin Institute Press, Philadelphia, PA (1980).

b. Ellern, Herbert, Military and Civilian Pyrotechnics, Chemical Publishing Co., Inc., New York, NY(1968).

#Top

TEST INFORMATION SHEET

1. TYPE OF EXPLOSIVE: Pyrotechnics

2. TEST TITLE: Burning Characteristics (Loose)

   a. Type of Test: Performance & Hazard Assessment.

   b. Description: The loose composition is ignited in containers, mixing trays, etc., as it is handled in the manufacturing process. Results are observed.

   c. Information Requirements for Assessment: Data is required for handling/processing/storing of the composition.

   d. Typical Results: Depending on the composition, it may (1) deflagrate, (2) burn as virtually a solid state reaction leaving a solid residue, (3) ignite and eject out of a container as a flaming mass or (4) flame in place.

   e. Repeatability and Reproducibility: Normally repeatable if ignited the same way each time.

3. NATIONAL REFERENCES:

   a. McLain, Joseph H., Pyrotechnics, The Franklin Institute Press, Philadelphia, PA (1980).

   b. Ellern, Herbert, Military and Civilian Pyrotechnics, Chemical Publishing Co., Inc., New York, NY (1968).

Top

TEST DESCRIPTION

1. TYPE OF TEST: Performance/Sensitivity - Detonability of Fuel-Air Explosives

2. PURPOSE: To determine the detonability of a fuel-air explosive (FAE) mixture as a function of fuel-air concentration and size of the initiating explosive charge.

3. BACKGROUND:

4. TEST ARRANGEMENT: A detonation tube is used to determine the detonability of FAE fuels on a small scale. The minimum dimensions of the tube are 60 cm diameter by 180 cm long. A longer tube is desirable, especially for solid fuels. The tube is open on both ends and has the following attachments: hoops at each end for sealing the tube with plastic film, a detonator holder at one end for initiating the fuel-air mixture, pressure transducers and/or velocity gauges along the side of the tube for detecting the passage of the detonation wave, and a fuel dispersal system. For liquid fuels, the fuel dispersal system typically consists of a spray manifold along the top of the tube for spraying the fuel under nitrogen or air pressure. For solid fuels, a manifold along the bottom of the tube is used. Jets of air from the manifold are used to entrain the powdered fuel. In use, the fuel is introduced into the tube. After a short wait to allow time for mixing, the detonating charge is initiated. The signals from the pressure transducers and/or the velocity gauges are used to determine if a stable detonation wave was established in the fuel-air mixture. A typical tube designed for liquid fuels is shown in Figure 1.

5. PROCEDURE: The same general procedure is used for both liquid and solid fuels although the fuel dispersal systems are different. The operator should:

a. Conduct initial tests at a stoichiometry of 1;
b. Use the largest initiator charge that is compatible with the test apparatus; and
c. Use three replications.

6. RESULTS AND DATA:

6.1 The data recorded for each test is generally as follows: fuel type; fuel quantity; concentration; spray or mix time; ambient temperature, pressure, and humidity; temperature drop caused by evaporation of fuel (optional); type and size of initiator; data records showing closure time for detonation velocity gauges; and data records of the pressure transducer outputs. The data records are assessed to determine the detonation velocity and detonation pressure.

6.2 If a detonation is not obtained, the fuel is not considered a practical fuel for FAE applications.

6.3 If a detonation is obtained, the testing is continued with decreased initiator size and/or of stoichiometric concentrations until the detonability limits are established as a function of both fuel-air ratio and initiator energy. A typical detonation limit curve that can be developed from this data is shown in figure 2.

7. SUPPLEMENTARY INFORMATION:

8. NATIONAL REFERENCES:
#Top

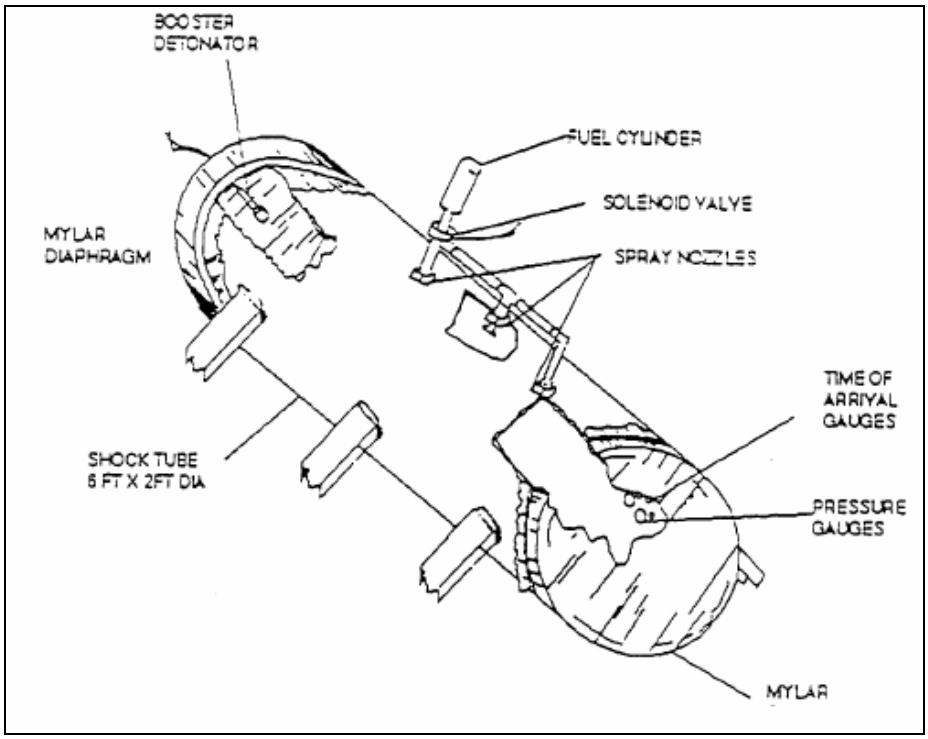

FIGURE 1. Type detonation tube for liquid fuels.

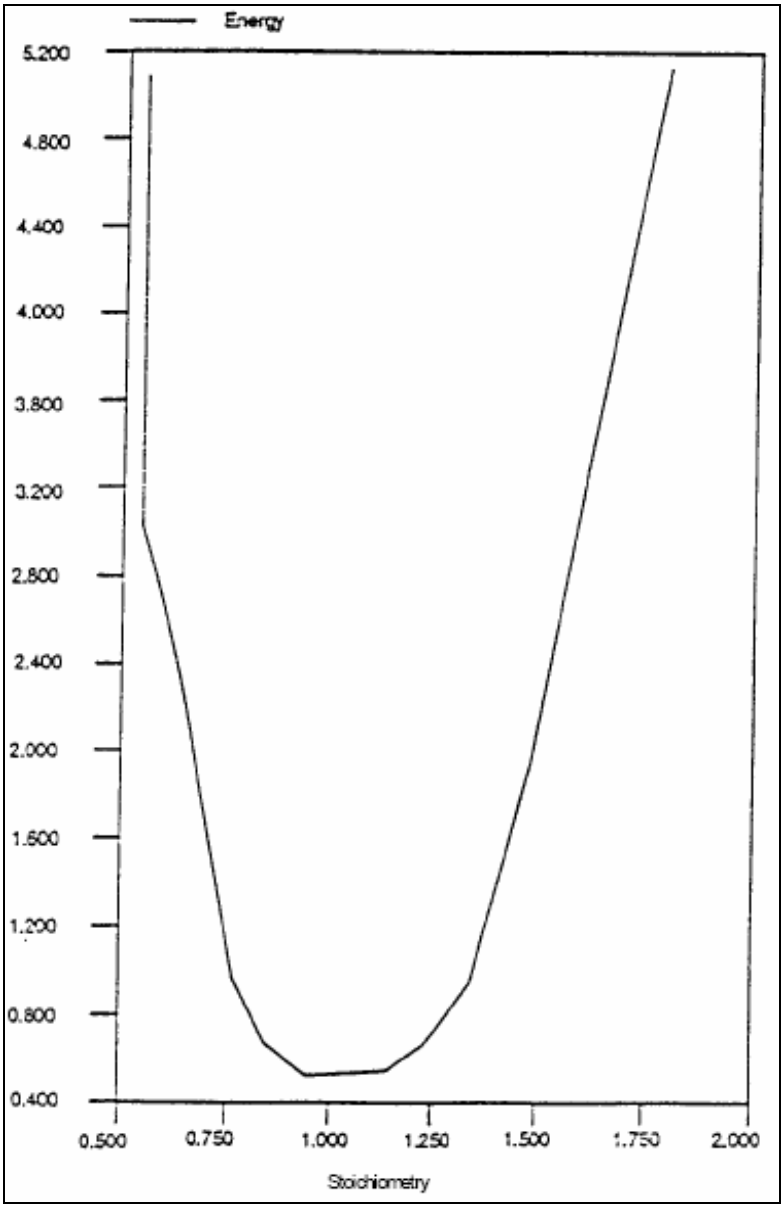

FIGURE 2. Typical detonation limit curve.

#Top

TEST INFORMATION SHEET

1. TYPE OF EXPLOSIVE: Propellants

2. TEST TITLE: Subscale Motor Test

   a. Type of Test: Performance Assessment.

   b. Description: Subscale motors are fitted with nozzles sized to operate at designated average pressures (usually 1000, 2000, and 4000 psi), conditioned at the temperatures of either -54 ^{o}C, 25 ^{o}C, and +74 ^{o}C (-65 ^{o}F, 77 ^{o}F, and 165 ^{o}F, respectively), or -40 ^{o}C, 25 ^{o}C, and 60 ^{o}C (-40 ^{o}F, 77 ^{o}F, and 140 ^{o}F, respectively). They are examined radiographically for cracks, voids, etc., and only those without defects are statically fired.

   c. Information Requirements for Assessment: These tests are used to obtain more precise values for the burning rate of the propellant than can be obtained from slab motor or strand burning tests, and for the determination of the dependence of the burning rate on temperature.

   d. Typical Results: Depend on material tested.

   e. Repeatability and Reproducibility: Good.

3. NATIONAL REFERENCES:

   a. MIL-STD-2100 (OS), "Military Standard: Propellant, Solid, Characterization of", 30 March 1979.

#Top

TEST INFORMATION SHEET

1. TYPE OF EXPLOSIVE: Pyrotechnics

2. TEST TITLE: Hot/Cold Ignition/Burning Tests

   a. Type of Test: Performance Assessment.

   b. Description: The design configuration is used. The pyrotechnic units are brought to the desired temperatures. The ignition and burning characteristics are noted.

   c. Information Requirements for Assessment: The unit functions safely and within the performance specifications for the design.

   d. Typical Results: Under colder conditions pyrotechnics generally are more difficult to ignite and typically burn slower. Under hotter conditions pyrotechnics will generally ignite more readily and burn faster. In some extremes cases, there are ignition failures under cold conditions and deflagrations under hot conditions.

   e. Repeatability and Reproducibility: Normally reproducible and repeatable.

3. NATIONAL REFERENCES:

a. McLain, Joseph H., Pyrotechnics, The Franklin Institute Press, Philadelphia, PA (1980).

b. Ellern, Herbert, Military and Civilian Pyrotechnics, Chemical Publishing Co., Inc., New York, NY (1968).

#Top

TEST INFORMATION SHEET

1. TYPE OF EXPLOSIVE: Pyrotechnics

2. TEST TITLE: Moisture Content of Composition vs. Performance

   a. Type of Test: Performance Assessment.

   b. Description: The moisture content of the composition will be determined using analytical techniques accurate for the chemicals involved. The effect of the moisture on the performance characteristics of the composition in the test vehicle will be determined. The allowable range of moisture content can then be extrapolated from the maximum and/or minimum permissible for end-item performance requirements.

   c. Information Requirements for Assessment: Information is required to determine allowable levels of moisture in pyrotechnic compositions.

   d. Typical Results: Reported as "percent water".

   e. Repeatability and Reproducibility: Normally repeatable.

3. NATIONAL REFERENCES:

a. McLain, Joseph H., Pyrotechnics, Franklin Institute Press, Philadelphia, PA (1980).

b. Ellern, Herbert, Military and Civilian Pyrotechnics, Chemical Publishing Co., Inc., New York, NY (1968).

#Top

ALLIED
ORDNANCE
PUBLICATION

PUBLICATION
INTERALLIEE
SUR LES MUNITIONS

AOP-38
(Edition 3/édition 3)

GLOSSARY OF TERMS AND DEFINITIONS CONCERNING THE SAFETY AND SUITABILITY FOR SERVICE OF MUNITIONS, EXPLOSIVES AND RELATED PRODUCTS

GLOSSAIRE DE TERMES ET DEFINITIONS SUR LA SECURITE ET L'APTITUDE AU SERVICE DE MUNITIONS, MATIERES EXPLOSIVES ET PRODUITS ASSOCIES

AOP-38

APRIL 2002

AVRIL 2002

NORTH ATLANTIC TREATY ORGANIZATION

NATO STANDARDIZATION AGENCY (NSA)

NATO LETTER OF PROMULGATION

April 2002

1. AOP-38 (Edition 3) - GLOSSARY OF TERMS AND DEFINITIONS CONCERNING THE SAFETY AND SUITABILITY FOR SERVICE OF MUNITIONS, EXPLOSIVES AND RELATED PRODUCTS is an UNCLASSIFIED publication.

2. AOP-38 (Edition 3) is effective upon receipt. It supersedes AOP-38 (Edition 2) which shall be destroyed in accordance with the local procedures for the destruction of documents.

Jan H ERIKSEN
Rear Admiral, NONA
Director, NSA

ORGANISATION DU TRAITE DE L'ATLANTIQUE NORD

AGENCE OTAN DE NORMALISATION (AON)

LETTRE DE PROMULGATION DE L'OTAN

Avril 2002

1. AOP-38 (Edition 3) - GLOSSAIRE DE TERMES ET DEFINITIONS SUR LA SECURITE ET L'APTITUDE AU SERVICE DE MUNITIONS, MATIERES EXPLOSIVES ET PRODUITS ASSOCIES, est une publication NON CLASSIFIEE.

2. L'AOP-38 (Edition 3) prend effet dès réception. Elle remplace l'AOP-38 (Edition 2) qui sera détruite conformément aux procédures locales de destruction des documents.

Jan H ERIKSEN
Vice-amiral, NONA
Directeur de l'AON

RECORD OF CHANGES

Change Date	Date entered	Effective Date	By Whom Entered

REPERTOIRE DES CORRECTIONS

Date de la correction	Date d'inscription	Date d'entrée en vigueur	Inscrit par

TABLE OF CONTENTS / TABLE DES MATIERES

PAGE

LETTRE DE PROMULGATION DE L'OTAN ..... **III**

RECORD OF CHANGES ..... **IV**

REPERTOIRE DES CORRECTIONS ..... **IV**

TABLE OF CONTENTS / TABLE DES MATIERES ..... **V**

1. INTRODUCTION 1
2. LAYOUT 1
3. USE OF THE GLOSSARY 1

1. INTRODUCTION 1
2. MISE EN OEUVRE 1
3. UTILISATION DU GLOSSAIRE 1

ANNEX A / ANNEXE A - ACRONYMS / ACRONYMES **A-1**

1. ENGLISH ACRONYMS A-1
2. ACRONYMES DANS LES TEXTES FRANÇAIS A-**3**

ANNEX B / ANNEXE B - INDEX OF TERMS / REPERTOIRE DES TERMES **B-1**

1. LIST OF TERMS – ENGLISH/FRENCH B-1
2. LISTE DES TERMES -FRANÇAIS/ANGLAIS B-13
3. INTERRELATIONSHIPS BETWEEN TERMS / RAPPORTS ENTRE TERMES B-26

ANNEX C / ANNEXE C - TERMS AND DEFINITIONS / TERMES ET DÉFINITIONS **C-1**

ANNEX D / ANNEXE D - REFERENCE DOCUMENTS / DOCUMENTS DE RÉFÉRENCE **D-1**

1. Introduction

This Glossary contains the specialist acronyms, terms and their definitions related to the work of the NATO Group on Safety and Suitability for Service of Munitions and Explosives (AC/310). This work encompasses:

- munitions, explosives and munition-weapon interfaces,
- safety and suitability for service (S3) thereof and
- related topics concerning the work of AC/310,

but excludes nuclear, biological and chemical weapons

This Glossary complements the NATO Glossary of Terms and Definitions, AAP-6, which lists terms and definitions of general application in NATO documents. The NATO terminology policy as laid down in AAP-6 and the guidance from the NATO Terminology Coordinator (November 1997) has been followed as possible.

The terminology existing in internationally agreed glossaries, in particular AAP-6 and further the AC/310 and other NATO publications has been applied as much as possible without any change. Nevertheless, in some cases, adaptation has been necessary to avoid contradictions and to comply with the terminology rules. Other publications have also been consulted; see Annex D.

Abbreviations, terms and definitions included in this Glossary are not classified.

2. Layout

The Glossary is bilingual English/French.

Acronyms are presented in Annex A.

Annex B is an index of terms. The terms are alphabetically arranged English/French and French/English. For some groups of terms, interrelationships are given.

The terms and their definitions are presented in Annex C. The terms are alphabetically arranged, only in English in order to keep the English and French texts together and to prevent deviations between both.

Where suitable software is used, electronic copies of Annex C may be rearranged using the Sort function to give a French alphabetically rearranged version.

Annex D comprises a list of reference documents. The principal sources of the terms and definitions herein are the STANAGs and APs developed by AC/310.

3. Use of the Glossary

3.1 Formal AC/310 documents

The primary aim of this Glossary is to ensure homogeneity in the use of terms and associated definitions in the documents generated by AC/310. Where possible, all terms and definitions should be taken from AAP-6, or from this AOP, in accordance with their meaning.

Where new terms and definitions are needed to understand unambiguously a document, custodians are to submit these in English and French to the AC/310 terminology working group for inclusion into this AOP and/or into AAP-6. They may be inserted in the text of the document itself if they concern only the tenor of the subject document. If the terms and definitions can only be submitted in one language, the terminology working group may assist to produce a valid translation.

3.2 Other applications

This AOP may serve as a guide or as a reference for AC/310 as well as for other bodies, together with other dictionaries and glossaries (c.f. Annex D).

3.3 Updating

The need for AC/310 to have access to an up-to-date Glossary is important. There are inevitably some omissions and errors, and identification of these shortcomings by the users will serve for rapid updating and improvement of this AOP.

If, during AC/310 activities, new or modified terms and definitions of general interest for AC/310 appear to be necessary, updating of the Glossary will be performed in accordance with the directives of the AC/310 Handbook. Criteria for new terms and definitions are given in §4 below.

All suggestions from users for improvement or addition of the Glossary will be welcomed. These can be addressed to the Secretary of AC/310, Defence Support Division, NATO Headquarters, B1110 Brussels, fax 0032 (0)2707 4103, e-mail: plan.policy@hq.nato.int.

3.3 Texts of terms and definitions

New terms and definitions should, in line with AAP-6, satisfy the following criteria:

a. A technical or specialist term may only be included if it has significance in the AC/310 field.

b. The need for creation of a new term or definition must be evident. Consequently, a term which has been defined sufficiently in AAP-6, this AOP or the common dictionaries (see Annex D §1) may be quoted but will not be redefined.

c. Each term and definition must be in their its simplest form: a noun should be in the singular and a verb should be in the infinitive. They must be as succinct as possible.

d. A definition should be expressed in simple, clear and grammatically correct language.

e. A term of general use should not be given a restrictive definition that limits its application.

f. Furthermore, the terms and definitions are subject to the following constraints:

(1) Unless there are special reasons to the contrary, they should not contain acronyms, abbreviations, formulae, symbols or equations.

(2) They should not include a qualifier in parenthesis.

(3) Procedural matter and any non-essential information should be excluded.

1. Introduction

Le présent Glossaire comprend les acronymes, les termes et leurs définitions spécialisés en matière du travail du Groupe OTAN sur la sécurité et l'aptitude au service des munitions et des matières explosives (AC/310). Ce travail concerne:

- les munitions, matières explosives et couples arme-munition,
- leur sécurité et aptitude au service (S3) et
- des sujets apparentés au travail de l'AC/310 ,

mais à l'exception des systèmes d'armes nucléaires, biologiques et chimiques.

Ce glossaire est complémentaire au glossaire OTAN de termes et définitions (AAP-6). Ce document énumère les termes et définitions d'application générale dans les documents de l'OTAN. La politique terminologique de l'OTAN telle qu'elle est définie dans l'AAP-6 et les directives du coordinateur de terminologie de l'OTAN (novembre 1997) a été suivie dans la mesure du possible.

La terminologie qui existe dans les glossaire internationales agréés, en particulier l'AAP-6 et les autres publications de l'OTAN a été appliquée pour autant que possible sans modification. Néanmoins, des adaptations ont été quelquefois nécessaires pour éviter des contradictions et pour satisfaire aux règles de terminologie. D'autres publications internationales et nationales ont également été consultées; voir l'annexe D.

Les abréviations, termes et définitions dans le glossaire ne sont pas classifiés.

2. Mise en oeuvre

Le glossaire est bilingue, anglais/français et français/anglais.

Les acronymes sont présentés dans l'annexe A.

L'annexe B est un répertoire des termes. Les termes sont rangés par ordre alphabétique en anglais/français et en français/anglais. Pour quelques groupes de termes, les rapports entre les termes sont présentés.

Les termes et leurs définitions sont présentés dans l'annexe C. Ils sont classés par ordre alphabétique, uniquement en anglais, afin de maintenir les textes français et anglais à hauteur et d'éviter toutes déviations.

Les copies électroniques de l'annexe C pourront être réarrangées pour obtenir une version française par ordre alphabétique en français à l'aide de la fonction de classement.

L'annexe D comprend une liste des documents de référence. Les principales sources des termes et définitions de cette publication sont les STANAG et les AP développés par l'AC/310.

3. Utilisation du glossaire

3.1 Documents formels de l'AC/310

Le premier objectif de ce Glossaire est d'assurer une utilisation homogène des termes et définitions associées dans les documents produits par l'AC/310. Dans la mesure du possible, tous les termes et toutes les définitions devraient être empruntés à l'AAP-6 ou à cette AOP, suivant leur signification.

Quand il y a besoin de nouveaux termes et de nouvelles définitions pour comprendre sans ambiguïté le document, le pilote doit les soumettre en français et en anglais par intermédiaire du Secrétaire au groupe de travail terminologique de l'AC/310 pour insertion dans ce glossaire et/ou dans l'AAP-6. Ils peuvent être insérés dans le document même s'ils concernent uniquement la teneur du document en question. Si les termes et définitions ne peuvent qu'être soumis dans une seule langue, le groupe de travail terminologique pourrait assister pour préparer une traduction valable.

3.2 Autres applications

Cette AOP pourra servir de guide et document de référence à l'AC/310 ainsi qu'à d'autres instances, avec d'autres dictionnaires et glossaires. (Cf. annexe D).

3.3 Mise à jour

Le besoin de l'AC/310 de disposer d'un Glossaire à jour est important. Il y aura inévitablement quelques omissions et des erreurs. Leur identification par les utilisateurs servira à une remise à jour rapide et une amélioration de la présente AOP.

Si pendant les activités de l'AC/310 le besoin de nouveaux termes et de nouvelles définitions d'intérêt global pour l'AC/310 se manifeste, la mise à jour du Glossaire se fera suivant les procédures du Manuel de l'AC/310. Les critères pour les nouveaux termes et définitions sont donnés au §4 ci-après.

Toutes les suggestions des utilisateurs pour améliorer ou compléter le glossaire seront très appréciées. Elles peuvent être adressées au Secrétaire de l'AC/310, Division Support Défence, État Major de l'OTAN, B-1110 Bruxelles, télécopieur 0032 (0)2707 4103 ou e-mail: plan.policy@hq.nato.int.

3.4 Textes de termes et définitions

Les nouveaux termes et définitions devront satisfaire les critères suivants (voir aussi l'AAP-6):

a. Seul un terme technique ou spécifique ayant une signification dans le domaine de l'AC/310 peut être inclus.

b. Pour créer un nouveau terme ou une nouvelle définition, le besoin doit être évident. Par conséquent, un terme qui a été défini suffisamment dans l'AAP-6 pourra être reproduit sans être redéfini dans la présente AOP ou les dictionnaires habituels (voir l'annexe D).

c. Chaque terme et chaque définition doit présenter la forme la plus simple; un substantif doit être au singulier et un verbe à l'infinitif. Ils doivent être aussi succincts que possible.

d. Une définition doit être exprimée dans un langage simple, clair et correct du point de vue grammatical.

e. Il ne faudra pas attribuer une définition restrictive à un terme ayant une signification générale.

f. En outre, les termes et définitions doivent satisfaire les contraintes suivantes:

(1) Sauf s'il existe une raison valable d'agir autrement, ils ne doivent pas comprendre des acronymes, des abréviations, des formules, des symboles ni des équations.

(2) Les questions de procédure et toute information non essentielle seront exclues.

(3) Les qualificatifs entre parenthèses seront exclus.

ACRONYMS / ACRONYMES

This annex gives an inventory and the meaning of acronyms and terms concerning munitions, explosives and munition-weapon system interfaces. Acronyms of non-specialist terms are presented in the concerning NATO publications and in the Handbook AC/310.

Cette annexe fait un inventaire et donne la signification d'acronymes de termes relatifs aux munitions, aux matières et produits explosifs et aux couples arme-munition. Les acronymes des termes non-spécialisés sont présentés dans les publications OTAN en question et dans le Manuel AC/310.

1. English acronyms

Abbreviation	Meaning / French equivalent acronym or term
ALM	Air Launched Munition / MLA
AP	Ammonium Perchlorate / PA
APERS	AntiPERSonnel / APERS
ART	ARTillery / ART
BCI	Bulk Current Injection / injection de courant sur toron
BW	Bridge Wire (initiator) / initiateur à fil chaud
CC	Conducting Composition (cap or initiator) / CC
CFC	Carbon Fibre Composite / composite à fibre de carbone
CFRP	Carbon Fibre Reinforced Plastic / plastique renforcé par des fibres de carbone
DDT	Deflagration to Detonation Transition / TDD
DOST	Demolition charges One-Shot-Two-steps / charges de destruction monocoup bifonction
DP	Design Pressure / pression nominale
DPA	DiPhenylAmine / DPA
EBW	Exploding Bridge Wire (initiator) / DEP à fil explosé
ECWGT	Explosive Component Water Gap Test / épreuve du gap d'eau pour des composants explosifs
EED	Electro-Explosive Device / DEP
EFI	Exploding Foil Initiator ("slapper-detonator") / DEP à élément projeté
EM	Electro-Magnetic / EM
EMI	Electro-Magnetic Interference / interférence électromagnétique
EMOP	Extreme Maximum Operating Pressure / pression extrême maximale en fonctionnement
EMP	Electro-Magnetic Pulse / impulsion électromagnétique
EMR	Electro-Magnetic Radiation / radiation électromagnétique
EMRE	Electro-Magnetic Radiation Environment / environnement de radiations électromagnétiques.
EOD	Explosive Ordnance Disposal / enlèvement et destruction des explosifs
ERM	Electrically Representative Materiel / MER
ESC	Extreme Service Conditions / CUE
ESCP	Extreme Service Condition Pressure / PCUE
ESD	Electro-Static Discharge / décharge électrostatique
ETTL	Equipment Transient Test Level / niveau de test transitoire sur l'équipement
FCE	Firing Capacitor Energy / énergie de mise à feu en condensateur
FME(C)A	Failure Mode Effects (and Criticality) Analysis / AMDE(C)
FTA	Fault Tree Analysis / analyse par arbre de défaillances
GTPS	Space pyrotechnic working group / GTPS
HA	Hazard Analysis / analyse des risques
HAZOP	HAZard and OPerability analysis / analyse de risque opérationnelle
HE	High Explosive / explosif
HEM	Hand Emplaced Munition / munition à positionnement manuel

Abbreviation	Meaning / French equivalent acronym or term
HMX	High Melting Point Explosive (Cyclo-tetramethaline tetranitromine - octogene) / octogène (cyclotétraméthylène- tétranitramine)
HNS	Hexa-Nitro Stilbene / HNS
ICM	Improved Conventional Munition / munition classique améliorée
IEC	International Electrical Committee
IM	Insensitive Munitions / MURAT
ISD	Ignition Safety Device / dispositf de sécurité d'allumage
LCT	Lower Conditioning Temperature / température inférieure de conditionnement
LFT	Lower Firing Temperature / température inférieure de tir
LFTUPP	(Projectile) Lower Firing Temperature Upper Proof Pressure / pression supéri eure d'épreuve (du projectile) à la température inférieure de tir
MIE	Minimum Ignition Energy / énergie d'allumage minimum
MOP	Maximum Operating Pressure (curve) / PMF, CPMF
MNFS	Maximum No-Fire Stimulus (no-fire threshold) / seuil de non-mise à feu
MT	Mechanical Time (fuze) / (fusée) MT, - chronométrique mécanique
MTDS	Manufacture to Target or Disposal Sequence (life cycle) / cycle de vie
MTS	Manufacture to Target Sequence / cycle de vie en service
MV	Muzzle Velocity / vitesse initiale (V_0)
NC	NitroCellulose / NC
NDPA	Nitro-DiPhenylAmine / nitro-diphenylamine
(N)EMP	(Nuclear) ElectroMagnetic Pulse / IEM(N)
NG	NitroGlycerine / NG
NGu	NitroGuanidine / NGu
NTO	3-Nitro 1,2,4 triazole - 5 ONE / ONTA
OB	Ordnance Board (UK) / OB
PD	Point Detonating (fuze) / (fusée) à percussion
PETN	PEnta-erytritol-TetraNitrate / pentrite
PMP	Permissible Maximum Pressure / PMP
PP	Proof Pressure / pression d'épreuve
PROX	PROXimity (fuze) / (fusée) PROX
PTC	Pin-To-Case (mode) / (mode) entre broche et boîtier
PTP	Pin-To-Pin (mode) / (mode) broche à broche
RADHAZ	Radio and Radar RAdiation HAZards / risques liés au rayonnement radio et radar
RDX	Research Department Explosive (cyclonite or trimethylentrinitroamine, hexogene) / hexogène
RF	Radio Frequency / RF
S3	Safety and Suitability for Service / sécurité et aptitude au service
SAD	Safety and Arming Device / DSA
SAU	Safe and Arming Unit / DSA
SCB	Semi-Conductor Bridge (initiator) / DEP à fil semi-conducteur
SDT	Shock-to-Detonation Transition / TCD
S3	Safety and Suitability for Service / sécurité et aptitude au service
SCCS	Safety Critical Computing System / système informatisé critique du point de vue de la sécurité
SLM	Surface Launched Munition / MLS
SMP	Safe Maximum Pressure / pression maximale de sécurité
TMA	Thermo-Mechanical Analysis (explosives) / analyse thermo-mécanique
TNT	TriNitroToluene / TNT
UCT	Upper Conditioning Temperature / température supérieure de conditionnenement
UFT	Upper Firing Temperature / température supérieure de tir
UFTUPP	(Projectile) Upper Firing Temperature Upper Proof Pressure / pression supérieure d'épreuve (du projectile) à la température supérieure de tir
ULM	Underwater Launched Munitions / munition à lanceur sous-marin

Abbreviation	Meaning / French equivalent acronym or term
..UPP	... Upper Proof Pressure (combined with LFT or UFT) / pression maximale d'épreuve
WAS	Weapons and Ammunition Safety manual (Sweden) /
WP	White Phosphorus / phosphore blanc
WTL	Weapon Transient Level / niveau transitoire de l'arme
XDT	eXplosion-to-Detonation Transition / TXD

2. Acronymes dans les textes français

Pour les acronymes anglais dont il n'a pas d'équivalent français, voir §1 ci-dessus.

Acronyme	Signification / Acronyme ou terme anglais équivalents
AMDE(C)	Analyse de Modes de DÉfaillance (et de leur Criticité) / FME(C)A
APERS	AntiPERSonnel / APERS
ART	ARTillerie / ART
CC	Composition Conductrice (amorce) / CC
CPMF	Courbe de Pression Maximale de Fonctionnement / MOP curve
CUE	Conditions d'Utilisation Extrêmes / ESC
DEP	Dispositif Electro-Pyrotechnique / EED
DPA	DiPhenylAmine / DPA
DSA	Dispositif de Sécurité et d'Armement / SAD, SAU
EM	ÉlectroMagnétique / Electro_Magnetic
GTPS	Groupe de Travail de Pyrotechnie Spatiale / space pyrotechnic working group
HNS	HexaNitroStilbène / HNS
IEM(N)	Impulsion ElectroMagnétique (Nucléaire) / (N)EMP
MER	Matériau Electriquement Représentatif / ERM
MLA	Munition à Lanceur Aérien / ALM
MLS	Munition à Lanceur de Surface / SLM
MT	(fusée) Mécanique à Temps, - chronométrique mécanique / MT
MURAT	MUnitions à Risques ATténués / IM
NC	NitroCellulose / NC
NDPA	Nitro-DiPhenylAmine / NDPA
NG	NitroGlycérine / NG
NGu	NitroGuanidine / NGu
OB	Ordnance Board (UK)
ONTA	OxyNitroTriAzole / NTO
PA	Perchlorate d'Ammonium / AP
PCUE	Pression dans les Conditions d'Utilisation Extrêmes / ESCP
PMF	Pression Maximale de Fonctionnement / MOP
PMP	Pression Maximale Permise / PMP
PN	Poudre Noire
PROX	(fusée) de PROXimité / PROX
RF	Radio-Fréquence / RF

Acronyme	Signification / Acronyme ou terme anglais équivalents
TCD	Transition de Choc en Détonation / SDT
TDD	Transition de Déflagration en Détonation / DDT
TNT	TriNitroToluène, tolite / TNT
TXD	Transition d'eXplosion en Détonation (transition d'une réaction retardée ou inconnue en détonation) / XDT
V_0	Vitesse initiale / MV

INDEX OF TERMS / REPERTOIRE DES TERMES

This list comprises terms appearing in Annex C.

Cette liste comprend les termes mentionnés dans l'annexe C.

1. LIST OF TERMS – ENGLISH/FRENCH

A	
accelerated life testing	essai de vieillissement accéléré
acceptable performance	performance acceptable
accident	accident
acoustic circuit	mised a feu acoustique
acoustic mine	mine à dispositif acoustique
action integral	intégrale d'action
action time	durée du coup de feu, temps de bouche
active mine	mine à dispostif actif
actuate	déclencher
actuator	servocommande
air discharge	décharge aérien
air launched munition (ALM)	munition à lanceur aérlen (MLA)
all-arm distance	distance d'armement certain
all-fire level	seuil de mise à feu
all-function level	seuil de fonctionnernent
ammunition	munition de fir
ammunition safety	sécurité munitions
antenna mine	mine à antennas
anti-lift device	dispositif antirelevage
antipersonnel mine	mine antipersonnel
antitank mine	mine antichar
anti-watching device	dispositif anti-repérage
approved design	conception adoptée
arc	arc
arm	armer
armed	armé
armed configuration	configuration armée
armed mine	mine armée
arming	armement
arming delay	retard d'armement
arming delay device	dispositif de réceptivité différée
arming distance	distance d'armement
arming range	distance d'armement
assessment	évaluation
attachment zone	zone d'attachement
augmenting charge	relais (2)
automaton	automate
availability	disponibilité
B	
backblast	souffle an retour
base bleed	réduction de traïnée de culot
battleshort	contournement de dispositifs de sécurité
bio-degradation	biodégradation

black powder	poudre noire
blast	souffle
blasting cap	détonateur
blasting machine	exploseur
bonding (1)	adhésivité
bonding (2)	continuité éIectrique
boobytrap	piège
booster (1)	relais de détonation
booster (2)	propulseur d'appoint
booster and lead explosive	explosif de relais pyrotechnique
booster explosive	explosif de relais (pyrotechnique)
bore safety	sécurité dans l'âme
bottom mine	mine de fond
bouquet mine	mine bouquet
bridge wire (BW) initiator	dispositif électro-pyrotechnique â fil chaud
bulk current injection (BCI)	injection de courant sur un toron
burning	combustion
C	
cannon	canon
cap	alvéole
capture distance	distance de capture
capture radius	rayon de capture
cargo	charge cargo
cartridge	cartouche (1)
cavity	logement
chamber pressure	pression de chambre
characterization	caractérisation
charge	chargement
chemical conversion	conversion chimique
chemical decontamination	décontamination chimique
chemical mine	mine chimique
classification of lightning effects	classement des effets de la foudre
climatic category	catégorie climatique
closed detonation	détonation en milieu fermé
cloud to ground flash	éclair du nuage au sol
coefficient of linear thermal expansion	coefficient d'expansion thermique linéaire
combination circuit	mise de feu combinée
combustion	combustion
commit-to-arm	mise en état de service
common cause failure	désfaillance, de cause commune
common mode failure	défaillance de mode commune
common mode voltage	tension de mode commune
comparison explosive	matière explosive de comparaison
compatibility	compatibilité
complete system test	essai sur système complet
complete weapon test	essai sur arme complet
composite propellant	propergol composite
compressive deformation	déformation en compression
compressive modulus of elasticity	module d'elasticté en compression
compressive proportional limit	limite proportionnelle en compression
compressive rho-point	.....
compressive strain	effort de compression
compressive stress	contrainte en compression
computing system	système informatisé

conducting composition (CC)	composition conductrice (CC)
conducting composition cap	amorce à composition conductrice
confinement	confinement
contact discharge	décharge par contact direct
contact mine	mine à contact
continuing current	courant continu
controlled mine	mine contrôlée
conversion	conversion
cook off	explosion par échauffement, auto-inflammation
corona	effet corona
countermine	contreminer
cratering charge	charge enterrée
credible environment	environnement crédible
creeping mine	mine rampante
critical characteristic	caractéristique critique
critical detonation diameter	diamètre critique pour la détonation
critical item	élément critique
cryogenic exposure	cryofracture
cutting charge	charge découlpante
D	
danger : See 'hazard '	danger
danger area	zone dangereuse (1)
deactivation	désactivation
deflagration	déflagration
deflagration to detonation transition (DDT)	transition de déflagration en détonation (TDD)
degree of safety	degré de sécurité
delay element	retard pyrotechnique (1)
delayed detonation to detonation transition	transition d'une réaction retardée ou inconnue en détonation
demilitarization	démilitarisation
demolition	destruction
demolition accessory	accessoire de destruction
demolition charge	charge de destruction
demolition material	matériel de destruction
demolition store	accessoire, de destruction explosif
demolition sub-system	sous-systéme de destruction
demolition system	systéme cle destruction
dependability	sûreté de fonctionnement
deployment	déploiement
deployment configuration	configuration de déploiement
design pressure (DP)	pression nominale
design principles	principes de conception
design safety guides	directives de sécurité pour la conception
designed safety state	état de sécurité nominal
destruction	destruction
detonating cord	cordeau détonant
detonation	détonation
detonation relay system	Système de rclais de détonation
detonator	amorce-détonateur
deviation	deviation
differential voltage	tension de mode différentiel
diffusion flux	flux de diffusion
dip needle circuit	mise de feu à aiguille aimantée
direct action fuze	fusée percutante

direct strike	coup direct
disarm	désarmement
discriminating circuit	circuit d'analyse
disposal	mise au rebut
distant flash	éclair lointain
dormant	insensible
drifting mine	mine dérivante
drop	chute
drop height	hauteur de chute
dud	raté (1)
durability	durabilité
E	
early burst	éclatement prématuré
effectiveness on target	efficacité sur la cible
electric ignition	allumage électrique
electric initiation	amorçage électrique
electrically representative material (ERM)	matériau électriquement représentatif
electrochemical reduction	réduction électrochimique
electro-explosive device (EED)	dispositif électro-pyrotechnique (DEP)
electromagnetic pulse (EMP)	impulsion électromagnétique
electromagnetic radiation environment (EMRE)	environnement de radiations électromagnétiques
electrostatic charge level	niveau de charge électrostatique
electrostatic discharge (ESID)	décharge électrostatique
embedded software	logiciel intégré an mémoire morte
enable	effacer les sécurités
end-of-life	fin de vie de service
energetic material	matiére énergétique
environment	environnement
environmental force	force d'environnement
environmental profile	profil d'environnement
environmental requirement	exigence du point de vue de l'environnement
environmental sensor	détecteur d'environnement
environmental test equipment	équipement d'essais d'environnement
equipment transient test level (ETTL)	niveau d'essais transitoires pour une arme
evaluation	évaluation
event tree	arbre d'événements
event tree analysis	analyse d'arbre d'événements
exercise mine	mine d'exercice
exploder	exploseur
exploding bridge wire (EBW) initiator	dispositif électro-pyrotechnique à fil explosé
exploding foil initiator (EFI)	dispositif électro-pyrotechnique à élément projeté
explosion	explosion
explosion-to-detonation transition (XDT)	transition d'une reaction retardée ou inconnue en détonation(TXD)
explosive	matière explosive
explosive aerosol	explosif combustible-air
explosive component	composant pyrotechnique
explosive material	matière explosive
explosive ordnance disposal (EOD)	enlèvement et destruction des explosifs
explosive slurry	bouillie explosive
explosive train	chaïne pyrotechnique
explosiveness	explosivité
extreme service conditions pressure (ESCP)	pression dans les conditions d'utilisation extrêmes(PCUE)
extreme service environment	environnement extême propre au service

F	
fail-safe	sécurité positive
failure (1)	défaillance
failure (2)	raté
failure cause	cause de défaillance
failure mode	mode de défaillance
failure mode, effects (and criticality) analysis (FMEA, FMECA)	analyse des modes de défaillance, de leurs effets (AMDE) et de leur criticité (AMDEC)
failure probability	probabilité de défaillance
failure probability density	densité de la probabilité de défaillance
failure tolerance	tolérance aux pannes
family of nose fuzes	famille de fusées d'ogive
far field	champ lointain
far field flash	éclair lointain
far field strike	coup de foudre lointain
fast heating	échauffement rapide
fault	défaillance
fault tree analysis (FTA)	analyse d'arbre de défaillance
field impedance	impédance d'onde
field strength	amplitude du champ
film bridge initiator	dispositif électro-pyrotechnique à feuille chaude
final (or type) qualification	homologation finale
fireset	dispositif de mise de feu
firing	mise à feu
firing capacitor	condensateur de mise de feu
firing circuit	circuit de mise de feu
firing control delay	retard de mise à feu
firing control system	systéme de commande de mise à feu
firing energy	énergie de mise à feu
firing interval	intervalle de tir
firing level	niveau de mise à feu
firing rate	cadence de tir
firing stimulus	stimulus de mise à feu.
firing stimulus relay system	système de relais de stimulus de mise à feu
firing system	système de mise à feu
firmware	documentation industrielle
first return stroke	coup en retour initial
flash	éclair
floating mine	mine flottante
forcing function	force d'environnement
Fraunhofer region	zone de Fraunhofer, champ lointain
free fall	chute libre
Fresnel region	zone de Fresnel, champ proche
fuel-air explosive	aérosol explosif
function (1)	fonctionnement
function (2)	faire fonctionner
function level	niveau de fonctionnement
functional stimulus	stimulus de fonctionnement
fuze	fusée, allumeur, bouchon allumeur, dispositif d'amorçage
fuze safety system	système de sécurité de fusée
fuze setter	programmateur de fusée, débouchoir de fusée
fuzing system	systéme de fusée
G	

gas actuator	pyromécanisme à gaz
gas generator	générateur de gaz
generic role	usage générique
gradient circuit	mise de feu à gradient
ground voltage transient	transitoires de potentiel de masse
guided missile	missile
gun powder	poudre noire
gun propellant	poudre pour armes
H	
hand emplaced munition (HEM)	munition à positionnement manuel
handling	manutention
hardening	renforcer
hazard	danger
hazard analysis	analyse des dangers
hazard and operability (HAZOP) analysis	analyse de risque opérationnelle
hazard level	gravité du danger
hazard probability	probabilité du danger
hazard severity	gravité du danger
hazardous state	état dangereux
high explosive	explosif
hollow charge	charge creuse
homing mine	mine à tête chercheuse
horizontal action mine	mine à effet horizontal
human error	erreur humaine
human failure	défaillance humaine
I	
igniter	allumeur
igniter charge	charge d'allumage
igniting component	composant d'allumage
ignition	allumage
ignition delay	retard d'allumage
ignition safety device (ISD)	dispositif de sécurité d'allumage
ignition system	dispositif d'allumage
ignition train	chaîne d'allumage (1)
IM assessment	évaluation du caractère MURAT
IM signature	signature MURAT
IM technology	technologie MURAT
impact action fuze	fusée percutante
incendiary mix	composition incendiaire
incident	incident
incineration	incinération
independent computer program	programme informatique indépendant
independent safety feature	dispositif de sécuritè indépendant
induced environment	environnement induit
induction circuit	mise de feu à induction
inert	inerte
inert electro-explosive device	dispositif électro-pyrotechnique inerte
inert mine	mine inerte
influence mine	mine à influence
initiation	amorçage
initiation system	dispositif d'initiation
initiator	initiateur, amorce
in-line explosive train	chaîne pyrotechnique non interrompue

insensitive munition (IM)	munition à risques atténués (MURAT)
installed munition	munition installée pour le transport
instrumented electro-explosive device	dispositif électro-pyrotechnique instrumenté
integrated circuit	mise de feu à intégration
intended role	usage générique
intercepted lightning strike	coup de foudre intercepté
interchangeability	interchangeabilité
intercloud flash	décharge internuages
intermediate current	courant intermédiaire
intermediate packaging	conditionnement intermédiaire
intermittent arming device	dispositif de réceptivité intermiteente
interoperability	interopérabilité
interrupted explosive train	chaîne pyrotechnique iriterrompue
interrupter	interrupteur
intracloud flash	décharge intranuage
intrusion	intrusion
irreversible failure	défaillance irréversible
J	
jet	jet
jettison	largage
jettisoned mine	jet de mines à la mar
L	
laser cutting	découpe au laser
laser grooving	fragilisation au laser.
laser initiation	amorçage par laser
launch	lancement
launch cycle	cycle de lancement
launch safety	sécuritéde lancement
launcher	rampe de lancement
lead	relais (1), charge relais
leader	précurseur
life cycle	cycle de vie
lightning attachment zone	zone d'attachement de]a foudre
linear thermal expansion	expansion thermique linéaire
liquid propellant	propergol liquide
loading safety	sécurité de chargement dans l'âme
logic route	chemin logique du système
logistic configuration	configuration logistique
logistic storage	stockage logistique
logistic transportation	transport logistique
look	période de réceptivité
loose cargo munition	munition non-arrimé
lot	lot
lower conditioning temperature (LCT)	température inférieure de conditionnement
lower firing temperature (LFT)	température inférieure de tir
M	
machine compliance	...
magnetic mine	mine magnétitique
main charge	charge principale
main charge high explosive	explosif de chargement
maintainability	maintenabilité
mandatory data	données obligatoires
mandatory test	essai obligatoire

manufacture to target or disposal sequence (MTDS)	cycle de vie
manufacture to target sequence (MTS)	cycle de vie en service
margin analysis	étude de marges
mask safety	sécurité de masque
materiel	matériel
maximum no-fire stimulus (MNFS): See `no-fire threshold	seuil de non-feu`
maximum operating pressure (MOP) curve	courbe de pression maximale de fonctionnement (CPMF)
maximum operation pressure (MOP)	pression maximale de fonctionnement (PMF)
mean power density	densité de puissance moyenne
mechanical situation	situation mécanique
mechanical time fuze (MT fuze)	fusée chronométrique mécanique
meltout	déchargement par coulée
memory integrity	intégrité de la mémoire
meteorological temperature	température atmosphérique
mine	mine
mine clearance	déminage (2)
mine countermeasures	lutte contre les mines
mine disposal	deminage (1)
minimum ignition energy (MIE)	énergie d'allumage minimale
minimum output level	niveau de sortie mininnale
misfire	raté (2)
mishap	accident
missile	projectile autopropulsé
mission critical system	système critique pour la mission
mission profile	profil de mission
mobile mine	mine autopropulsée
molten salt destruction	destruction par sel fondu
moored mine	mine à orin
mortar	mortier
mortar bomb	munition de mortier
mortar design pressure (DP) curve	courbe de pression nominate du tube de mortier
mortar munition	munition de mortier
mortar permissible maximum pressure (PMP) curve	courbe de pression maximale permise (PMP) pour tube de mortiers
mortar proof pressure (PP)	pression d'épreuve de mortier
mortar safe maximum pressure (SMP) curve	courbe de pression maximale de sécurité pour mortier
munition (US ammunition)	munition
munition response	réponse de la munition
muzzle safety	sécurité de bouche
muzzle velocity (MV)	vitesse initiale (V_0)
N	
natural environment	environnement naturel
near field	champ proche
nearby flash	éclair de proximité, décharge de proximité
neutralization	eutralisation
new explosive	matière explosive nouvelle.
new munition	munition nouvelle
no-arm distance	distance de non-armement certain
no-fire threshold	seuil de non-feu
no-fire threshold stimulus	seuil stimulus de non-feu
no-function threshold	seuil de non-fonctionnement
non-interrupted explosive train	chaîne pyrotechnique non interrompue
O	

one-look circuit	mise de feu
open burning	combustion à l'air libre
open detonation	pétardage
open-pit burning	combustion en puits ouvert
operability	opérabilité
operational environment	environnernent opérationnel
operational life	durée de vie opérationnelle
optional data	données complémentaires
optional test	essai facultatif
ordnance	arme et munitions
oscillating mine	mine ludion
overpressure	surpression
oxidation	oxydation
P	
packaged munition	munition conditionnée, munition emballée
part system test	essai sur partie de système
partial detonation	détonation partielle
passive mine	mine passive
patch	patch, mise à jour
path	parcours
payload	charge utile
peak pulse power density	densité de puissance crête d'une impulsion
peak rate of rise	taux de variation crête
peak stress point	...
peer review	revue de programme
performance	performance
permissible maximum pressure (PMP)	pression maximale permise (PMP)
photocatalytic neutralization	neutralisation photocatalitique
pin-to-case mode (PTC mode)	mode broche à boîtier
pin-to-pin mode (PTP mode)	mode broche à broche
plastic explosive	explosif plastique
platform	plate-forme
point detonating fuze (PD fuze)	fusée à percussion
practice mine	mine d'instruction
premature	prématuré
premature function	fonctionnement prematuré
pressure	pression
pressure mine (1)	mine à pression
pressure mine (2)	mine à dépression
primary cartridge	cartouche (2)
primary charge	charge primaire
primary explosive	explosif primaire
primer	amorce, étoupille
production build standard	produit de fabrication courante
projectile	projectile
projectile lower firing temperature upper proof pressure (Projectile LFTUPP)	pression supérieure d'épreuve du projectile à la temperature inférieure de tir
projectile upper firing temperature upper proof pressure (Projectile UFTUPP)	pression supérieure d'épreuve du projectile à la empérature supéreure de tir
proof pressure	pression d'épreuve
propellant	propergol, poudre
propulsion	propulsion
proximity fuze (PROX)	fusée à proximité (PROX)
pulse energy density	densité d'énergic d'une impulsion

pyroshock	choc pyrotechnique
pyrotechnic composition	composition pyrotechnique
pyrotechnic delay	retard pyrotechnique (2)
pyrotechnic train	chaîne d'allumage (2)
Q	
qualification (1)	qualification
qualification (2)	homologation
qualified explosive material	matiére explosive homologuée
R	
radio and radar radiation hazards (RADHAZ)	dangers des rayonnements radio-radar
rate of fire	cadence de tir
reactivation capability	capacité de réactivation
reattachment	réattachement
recovery	récupération
recycling	recyclage
relay	relais
relay box	boîte relais
reliability	fiabilité
render safe	mise an position de sécurité
response	réponse, réaction
response descriptors	réactions types
restrike	décharge secondaire
reuse	réutilisation
reversible failure	défaillance réversible
rifle launched grenade	grenade à fusil
ring set fuze	fusée à anneau
rising mine	mine à flotteur largable
risk	risque
risk analysis	analyse de risque
risk assessment	évaluation des risques
risk control	maîtrise des risques
risk estimation	estimation des risques
risk evaluation	évaluation des risques
risk management	gestion des risques
rocket	roquette
rocket assisted projectile	projectile à propulsion additionnelle
rocket propellant	propergol pour roquette
round	coup complet
S	
sabot	sabot
safe	sécurité
safe fatigue life	durée de vie en fatigue du point de vue de la sécurité
safe jettison	largage de détresse en condition de sécurité
safe jettison test	essai de largage
safe separation	separation en sécurité
safe separation distance	distance de sécurité
safety	sécurité
safety analysis	analyse de risque
safety and arming device (SAD)	dispositif de sécurité et d'armement (DSA)
safety and arming unit (SAU)	dispositif de sécurité et d'armement (DSA)
safety and suitability for service (S3)	sécurité et aptitude au service
safety barrier	barrière de sécurité
safety critical	critique du point de vue de la sécurité

safety critical	critique du point de vue de la sécurité
safety critical computing system (SCCS)	système infornnatisé critique du point de vue de la sécurité
safety critical function	fonction critique du point de vue de la sécurité
safety critical system	systéme critique du point de vue de la sécurité
safety device	dispositif de sécurité
safety distance	distance de sécurité
safety failure	défaillance de la sécurité
safety feature	dispositif de sécurité
safety fuze	mèche lente
safety kennel	programme interne de sécurité, noyau dur
safety margin	marge de sécurité
safety system	système de s sécurité
safety template	gabarit de sécurité
scuttle	saborder
sea skimmer	missile à trajectoire rasante
secondary explosive	explosif secondaire
secured cargo munition	munition arrimée
self destruction	autodestruction
self-guided missile	missile autoguidé
semi-conductor bridge (SCB) initiator	dispositif électro-pyrotechnique à fil serni- conducteur
sensitiveness	sensibilité (1)
sensitivity	sensibilité (2)
sensor	capteur
service environment	environnement propre au service
service life	durée de vie en service
service life cycle	cycle de vie en service
setter slots (holder, setting)	fentes des débouchoirs (de calage, de réglage)
shall	doit, daivent, il faut
shaped charge	charge formée
shell	obus
shock	choc
shock excitation	décharge oscillatoire
shock tube	tube choc
shock-to-detonation transition (SDT)	transition de choc en détonation (TCD)
should	devrait, devraient, il faudrait
single point failure	défaillance point-unique
slapper detonator	dispositif électro-pyrotechnique à élément projeté
slow heating	échauffement lent
slurry	bouillie explosive
sneak analysis	analyse des causes insidueueses
sneak circuit	circuit insidieux
software	logiciel
solar radiation	rayonnement solaire
spin stabilized	stabilisé par rotation
squib	étoupille
stability	stabilité
stabilizer	stabilisant
standard test	essai normalisé
stand-off	distance de fonctionnernent, distance d'action
sterilization	stérilisation
sterilizer	dispositif de stérilisation
stimulus	stimulus
stimulus level	niveau du stimulus
storage	stockage

storage and transit conditions	conditions de stockage et de transit
storage environment	environnement de stockage
storage life	durée de vie en stockage
stored energy	énergie emmagasinée
strain rate	...
streamer	traceur (2)
strike	coup de foudre
stroke	coup en retour
strong data typing	données en caractères gras
subsequent strokes	coups an retour secondaires
sub-system	sous-système
suitability for service	aptitude au service
surface-launched munition (SLM)	munition à lanceur de surface (MLS)
swept stroke	foudre balayante
sympathetic detonation	détonation par influence
sympathetic reaction	réaction par influence
system	système
system design pressure (system DP)	pression nominale du système
system safety	sécurité système
system safety device	dispositif de sécurité système
system safety program	programme de sécurité du système
T	
tactical storage	stockage tactique
tactical transportation	transport tactique
temperature coefficient	coefficient de temperature
test configuration	configuration d'essais
test directive	directive d'essais
test method	procédure d'essais
test parameter	paramètre d'essais
test plan	plan d'essais
test procedure	procédure d'essais
test sequence	séquence d'essais
test severity	sévérité d'essai
test validation	validation d'un essai
thermal spark	étincelle thermique
thermal time constant	constante de temps thermique
threat : See `hazard	danger.
time fuze	fusée chronométrique
time to reach peak	temps pour atteindre la crête
total duration	durée totale
tracer	traceur
transfer function	fonction de transfert
transportation	transport
triggered lightning strike	impact de foudre déclenché
type I, (II, III, IV, V) reaction See "response descriptors"	réactions type
type qualification: See "qualification or final qualification"	qualification ou homologation finale
U	
unarmed	non armé
underwater - launched munition (ULM)	munition à lanceur sous-marin
underwater munition	munition sous-marine
unsafe area	zone dangereuse (2)
unsafe conditions	conditions d'insécurité

upper conditioning temperature (UCT)	température supérieure de conditionnement
upper firing temperature (UFT)	température supérieure de tir
V	
vibration	vibration
voltage spark	étincelle en tension
W	
waiver	dérogation
warhead	tête militaire
washout	déchargement par lavage
watchdog timer	horloge de surveillance
water jet cutting	découpage par jet d'eau
weapon classes	catégories d'armes
weapon system	système d'arme
weapon transient level (WTL)	niveau transitoire pour une arme
wear life	durée de vie en usure
whole system test	essai sur système complet
wrench slots	fentes de vissage

2. LISTE DES TERMES -FRANÇAIS/ANGLAIS

A	
accessoire de destruction	demolition accessory
accessoire, de destruction explosif	demolition store
accident	mishap
adhésivité	bonding (1)
aérosol explosif	fuel-air explosive
allumage	ignition
allumage électrique	electric ignition
allumeur (1)	fuze
allumeur (1)	igniter
alvéole	cap
amorçage	initiation
amorçage électrique	electric initiation
amorçage par laser	laser initiation
amorce à composition conductrice	conducting composition cap
amorce, étoupille	primer
amorce-détonateur	detonator
amplitude du champ	field strength
analyse d'arbre de défaillance	fault tree analysis (FTA)
analyse d'arbre d'événements	event tree analysis
analyse de risque	risk analysis / safety analysis
analyse de risque opérationnelle	hazard and operability (HAZOP) analysis
analyse des causes insidueueses	sneak analysis
analyse des dangers	hazard analysis
analyse des modes de défaillance, de leurs effets (AMDE) et de leur criticité (AMDEC)	failure mode, effects (and criticality) analysis (FMEA, FMECA)
aptitude au service	suitability for service
arbre d'événements	event tree
arc	arc
armé	armed
arme et munitions	ordnance
armement	arming
armer	arm

autodestruction	self destruction
automate	automaton
B	
barrière de sécurité	safety barrier
biodégradation	bio-degradation
boîte relais	relay box
bouchon allumeur	fuze
bouillie explosive	explosive slurry
bouillie explosive	slurry
C	
cadence de tir	firing rate / rate of fire
canon	cannon
capacité de réactivation	reactivation capability
capteur	sensor
caractérisation	characterization
caractéristique critique	critical characteristic
cartouche (1)	cartridge
cartouche (2)	primary cartridge
catégorie climatique	climatic category
catégories d'armes	weapon classes
cause de défaillance	failure cause
chaîne d'allumage (1)	ignition train
chaîne d'allumage (2)	pyrotechnic train
chaïne pyrotechnique	explosive train
chaîne pyrotechnique iriterrompue	interrupted explosive train
chaîne pyrotechnique non interrompue	in-line explosive train / non-interrupted explosive train
champ lointain	far field
champ proche	near field
charge cargo	cargo
charge creuse	hollow charge
charge d'allumage	igniter charge
charge de destruction	demolition charge
charge découlpante	cutting charge
charge enterrée	cratering charge
charge formée	shaped charge
charge primaire	primary charge
charge principale	main charge
charge relais	lead
charge utile	payload
chargement	charge
chemin logique du système	logic route
choc	shock
choc pyrotechnique	pyroshock
chute	drop
chute libre	free fall
circuit d'analyse	discriminating circuit
circuit de mise de feu	firing circuit
circuit insidieux	sneak circuit
classement des effets de la foudre	classification of lightning effects
coefficient de temperature	temperature coefficient
coefficient d'expansion thermique linéaire	coefficient of linear thermal expansion
combustion	burning / combustion

combustion à l'air libre	open burning
combustion en puits ouvert	open-pit burning
compatibilité	compatibility
composant d'allumage	igniting component
composant pyrotechnique	explosive component
composition conductrice (CC)	conducting composition (CC)
composition incendiaire	incendiary mix
composition pyrotechnique	pyrotechnic composition
conception adoptée	approved design
condensateur de mise de feu	firing capacitor
conditionnement intermédiaire	intermediate packaging
conditions de stockage et de transit	storage and transit conditions
conditions d'insécurité	unsafe conditions
configuration armée	armed configuration
configuration de déploiement	deployment configuration
configuration d'essais	test configuration
configuration logistique	logistic configuration
confinement	confinement
constante de temps thermique	thermal time constant
continuité éIectrique	bonding (2)
contournement de dispositifs de sécurité	battleshort
contrainte en compression	compressive stress
contreminer	countermine
conversion	conversion
conversion chimique	chemical conversion
cordeau détonant	detonating cord
coup complet	round
coup de foudre	strike
coup de foudre intercepté	intercepted lightning strike
coup de foudre lointain	far field strike
coup direct	direct strike
coup en retour	stroke
coup en retour initial	first return stroke
coups an retour secondaires	subsequent strokes
courant continu	continuing current
courant intermédiaire	intermediate current
courbe de pression maximale de fonctionnement (CPMF)	maximum operating pressure (MOP) curve
courbe de pression maximale de sécurité pour mortier	mortar safe maximum pressure (SMP) curve
courbe de pression maximale permise (PMP) pour tube de mortiers	mortar permissible maximum pressure (PMP) curve
courbe de pression nominate du tube de mortier	mortar design pressure (DP) curve
critique du point de vue de la sécurité	safety critical
cryofracture	cryogenic exposure
cycle de lancement	launch cycle
cycle de vie	life cycle
cycle de vie en service	service life cycle
D	
daivent	shall
danger	hazard
dangers des rayonnements radio-radar	radio and radar radiation hazards (RADHAZ)
décharge aérien	air discharge
décharge électrostatique	electrostatic discharge (ESID)
décharge internuages	intercloud flash

décharge intranuage	intracloud flash
décharge oscillatoire	shock excitation
décharge par contact direct	contact discharge
décharge secondaire	restrike
déchargement par coulée	meltout
déchargement par lavage	washout
déclencher	actuate
décontamination chimique	chemical decontamination
découpage par jet d'eau	water jet cutting
découpe au laser	laser cutting
défaillance	failure / fault
défaillance de la sécurité	safety failure
défaillance de mode commune	common mode failure
défaillance humaine	human failure
défaillance irréversible	irreversible failure
défaillance point-unique	single point failure
défaillance réversible	reversible failure
déflagration	deflagration
déformation en compression	compressive deformation
degré de sécurité	degree of safety
démilitarisation	demilitarization
deminage (1)	mine disposal
déminage (2)	mine clearance
densité de la probabilité de défaillance	failure probability density
densité de puissance crête d'une impulsion	peak pulse power density
densité de puissance moyenne	mean power density
densité d'énergic d'une impulsion	pulse energy density
déploiement	deployment
dérogation	waiver
désactivation	deactivation
désarmement	disarm
désfaillance, de cause commune	common cause failure
destruction	demolition / destruction
destruction par sel fondu	molten salt destruction
détecteur d'environnement	environmental sensor
détonateur	blasting cap
détonation	detonation
détonation en milieu fermé	closed detonation
détonation par influence	sympathetic detonation
détonation partielle	partial detonation
deviation	deviation
devrait, devraient, il faudrait	should
diamètre critique pour la détonation	critical detonation diameter
directive d'essais	test directive
directives de sécurité pour la conception	design safety guides
disponibilité	availability
dispositif antirelevage	anti-lift device
dispositif anti-repérage	anti-watching device
dispositif d'allumage	ignition system
dispositif d'amorçage	fuze
dispositif de mise de feu	fireset
dispositif de réceptivité différée	arming delay device
dispositif de réceptivité intermiteente	intermittent arming device
dispositif de sécurité	safety device / safety feature

dispositif de sécurité d'allumage	ignition safety device (ISD)
dispositif de sécurité et d'armement (DSA) (1)	safety and arming device (SAD)
dispositif de sécurité et d'armement (DSA) (2)	safety and arming unit (SAU)
dispositif de sécuritè indépendant	independent safety feature
dispositif de sécurité système	system safety device
dispositif de stérilisation	sterilizer
dispositif d'initiation	initiation system
dispositif électro-pyrotechnique (DEP)	electro-explosive device (EED)
dispositif électro-pyrotechnique à élément projeté	exploding foil initiator (EFI) / slapper detonator
dispositif électro-pyrotechnique à feuille chaude	film bridge initiator
dispositif électro-pyrotechnique â fil chaud	bridge wire (BW) initiator
dispositif électro-pyrotechnique à fil explosé	exploding bridge wire (EBW) initiator
dispositif électro-pyrotechnique à fil serni- conducteur	semi-conductor bridge (SCB) initiator
dispositif électro-pyrotechnique inerte	inert electro-explosive device
dispositif électro-pyrotechnique instrumenté	instrumented electro-explosive device
distance d'armement	arming distance / arming range
distance d'armement certain	all-arm distance
distance de capture	capture distance
distance de fonctionnernent, distance d'action	stand-off
distance de non-armement certain	no-arm distance
distance de sécurité	safe separation distance / safety distance
documentation industrielle	firmware
doit,	shall
données complémentaires	optional data
données en caractères gras	strong data typing
données obligatoires	mandatory data
durabilité	durability
durée de vie en fatigue du point de vue de la sécurité	safe fatigue life
durée de vie en service	service life
durée de vie en stockage	storage life
durée de vie en usure	wear life
durée de vie opérationnelle	operational life
durée du coup de feu, temps de bouche	action time
durée totale	total duration
E	
échauffement lent	slow heating
échauffement rapide	fast heating
éclair	flash
éclair de proximité, décharge de proximité	nearby flash
éclair du nuage au sol	cloud to ground flash
éclair lointain	distant flash /far field flash
éclatement prématuré	early burst
effacer les sécurités	enable
effet corona	corona
efficacité sur la cible	effectiveness on target
effort de compression	compressive strain
élément critique	critical item
énergie d'allumage minimale	minimum ignition energy (MIE)
énergie de mise à feu	firing energy
énergie emmagasinée	stored energy
enlèvement et destruction des explosifs	explosive ordnance disposal (EOD)
environnement	environment
environnement crédible	credible environment
environnement de radiations électromagnétiques	electromagnetic radiation environment (EMRE)

environnement de stockage	storage environment
environnement extême propre au service	extreme service environment
environnement induit	induced environment
environnement naturel	natural environment
environnement propre au service	service environment
environnernent opérationnel	operational environment
équipement d'essais d'environnement	environmental test equipment
erreur humaine	human error
essai de largage	safe jettison test
essai de vieillissement accéléré	accelerated life testing
essai facultatif	optional test
essai normalisé	standard test
essai obligatoire	mandatory test
essai sur arme compète	whole weapon test
essai sur partie de système	part system test
essai sur système complet	whole system test
estimation des risques	risk estimation
état dangereux	hazardous state
état de sécurité nominal	designed safety state
étincelle en tension	voltage spark
étincelle thermique	thermal spark
étoupille	squib
étude de marges	margin analysis
évaluation	assessment evaluation
évaluation des risques	risk assessment / risk evaluation
évaluation du caractère MURAT	IM assessment
exigence du point de vue de l'environnement	environmental requirement
expansion thermique linéaire	linear thermal expansion
exploseur	exploder / blasting machine
explosif	high explosive
explosif combustible-air	explosive aerosol / fuel-air explosive
explosif de chargement	main charge high explosive
explosif de relais pyrotechnique	booster and lead explosive
explosif plastique	plastic explosive
explosif primaire	primary explosive
explosif secondaire	secondary explosive
explosion	explosion
explosion par échauffement,	cook off
explosivité	explosiveness
F	
faire fonctionner	function
famille de fusées d'ogive	family of nose fuzes
fentes de vissage	wrench slots
fentes des débouchoirs (de calage, de réglage)	setter slots (holder, setting)
fiabilité	reliability
fin de vie de service	end-of-life
flux de diffusion	diffusion flux
fonction critique du point de vue de la sécurité	safety critical function
fonction de transfert	transfer function
fonctionnement	function
fonctionnement prematuré	premature function
force d'environnement	environmental force / forcing function
foudre balayante	swept stroke
fragilisation au laser.	laser grooving

fusée à anneau	ring set fuze
fusée à percussion	point detonating fuze (PD fuze)
fusée à proximité (PROX)	proximity fuze (PROX)
fusée chronométrique	time fuze
fusée chronométrique mécanique	mechanical time fuze (MT fuze)
fusée percutante	direct action fuze / impact action fuze
fusée, allumeur	fuze
G	
gabarit de sécurité	safety template
générateur de gaz	gas generator
gestion des risques	risk management
gravité du danger	hazard level / hazard severity
grenade à fusil	rifle launched grenade
H	
hauteur de chute	drop height
homologation	qualification (2)
homologation finale	final (or type) qualification
horloge de surveillance	watchdog timer
I	
igniter	igniter
il faut	shall
impact de foudre déclenché	triggered lightning strike
impédance d'onde	field impedance
impulsion électromagnétique	electromagnetic pulse (EMP)
incident	incident
incinération	incineration
inerte	inert
initiateur, amorce	initiator
injection de courant sur un toron	bulk current injection (BCI)
insensible	dormant
intégrale d'action	action integral
intégrité de la mémoire	memory integrity
interchangeabilité	interchangeability
interopérabilité	interoperability
interrupteur	interrupter
intervalle de tir	firing interval
intrusion	intrusion
J	
jet	jet
jet de mines à la mar	jettisoned mine
L	
lancement	launch
largage	jettison
largage de détresse en condition de sécurité	safe jettison
limite proportionnelle en compression	compressive proportional limit
logement	cavity
logiciel	software
logiciel intégré an mémoire morte	embedded software
lot	lot
lutte contre les mines	mine countermeasures
M	

maintenabilité	maintainability
maîtrise des risques	risk control
manutention	handling
marge de sécurité	safety margin
matériau électriquement représentatif	electrically representative material (ERM)
matériel	materiel
matériel de destruction	demolition material
matiére énergétique	energetic material
matiére explosive	explosive material
matiére explosive de comparaison	comparison explosive
matiére explosive homologuée	qualified explosive material
matiére explosive nouvelle.	new explosive
mèche lente	safety fuze
mine	mine
mine à antennas	antenna mine
mine à contact	contact mine
mine à dépression	pressure mine (2)
mine à dispositif acoustique	acoustic mine
mine à dispostif actif	active mine
mine à effet horizontal	horizontal action mine
mine à flotteur largable	rising mine
mine à influence	influence mine
mine à orin	moored mine
mine à pression	pressure mine (1)
mine à tête chercheuse	homing mine
mine antichar	antitank mine
mine antipersonnel	antipersonnel mine
mine armée	armed mine
mine autopropulsée	mobile mine
mine bouquet	bouquet mine
mine chimique	chemical mine
mine contrôlée	controlled mine
mine de fond	bottom mine
mine dérivante	drifting mine
mine d'exercice	exercise mine
mine d'instruction	practice mine
mine flottante	floating mine
mine inerte	inert mine
mine ludion	oscillating mine
mine magnétitique	magnetic mine
mine passive	passive mine
mine rampante	creeping mine
mise à feu	firing
mise an position de sécurité	render safe
mise au rebut	disposal
mise de feu	one-look circuit
mise de feu à aiguille aimantée	dip needle circuit
mise de feu à gradient	gradient circuit
mise de feu à induction	induction circuit
mise de feu à intégration	integrated circuit
mise de feu combinée	combination circuit
mise en état de service	commit-to-arm
mised a feu acoustique	acoustic circuit
missile	guided missile

missile à trajectoire rasante	sea skimmer
missile autoguidé	self-guided missile
mode broche à boîtier	pin-to-case mode (PTC mode)
mode broche à broche	pin-to-pin mode (PTP mode)
mode de défaillance	failure mode
module d'elasticté en compression	compressive modulus of elasticity
mortier	mortar
munition	munition (US ammunition)
munition à lanceur aérlen (MLA)	air launched munition (ALM)
munition à lanceur de surface (MLS)	surface-launched munition (SLM)
munition à lanceur sous-marin	underwater - launched munition (ULM)
munition à positionnement manuel	hand emplaced munition (HEM)
munition à risques atténués (MURAT)	insensitive munition (IM)
munition arrimée	secured cargo munition
munition conditionnée, munition emballée	packaged munition
munition de fir	ammunition
munition de mortier	mortar bomb / mortar munition
munition installée pour le transport	installed munition
munition non-arrimé	loose cargo munition
munition nouvelle	new munition
munition sous-marine	underwater munition
N	
neutralisation	neutralization
neutralisation photocatalitique	photocatalytic neutralization
niveau de charge électrostatique	electrostatic charge level
niveau de fonctionnement	function level
niveau de mise à feu	firing level
niveau de sortie mininnale	minimum output level
niveau d'essais transitoires pour une arme	equipment transient test level (ETTL)
niveau du stimulus	stimulus level
niveau transitoire pour une arme	weapon transient level (WTL)
non armé	unarmed
O	
obus	shell
opérabilité	operability
oxydation	oxidation
P	
paramètre d'essais	test parameter
parcours	path
patch, mise à jour	patch
performance	performance
performance acceptable	acceptable performance
période de réceptivité	look
pétardage	open detonation
piège	boobytrap
plan d'essais	test plan
plate-forme	platform
poudre	proprllant: Voir propergol
poudre noire	black powder / gun powder
poudre pour armes	gun propellant
précurseur	leader
prématuré	premature
pression	pressure

pression dans les conditions d'utilisation extrêmes(PCUE)	extreme service conditions pressure (ESCP)
pression de chambre	chamber pressure
pression d'épreuve	proof pressure
pression d'épreuve de mortier	mortar proof pressure (PP)
pression maximale de fonctionnement (PMF)	maximum operation pressure (MOP)
pression maximale permise (PMP)	permissible maximum pressure (PMP)
pression nominale	design pressure (DP)
pression nominale du système	system design pressure (system DP)
pression supérieure d'épreuve du projectile à la temperature inférieure de tir	projectile lower firing temperature upper proof pressure (Projectile LFTUPP)
pression supérieure d'épreuve du projectile à la température supéreure de tir	projectile upper firing temperature upper proof pressure (Projectile UFTUPP)
principes de conception	design principles
probabilité de défaillance	failure probability
probabilité du danger	hazard probability
procédure d'essais	test method / test procedure
produit de fabrication courante	production build standard
profil de mission	mission profile
profil d'environnement	environmental profile
programmateur de fusée, débouchoir de fusée	fuze setter
programme de sécurité du système	system safety program
programme informatique indépendant	independent computer program
programme interne de sécurité, noyau dur	safety kennel
projectile	projectile
projectile à propulsion additionnelle	rocket assisted projectile
projectile autopropulsé	missile
propergol composite	composite propellant
propergol liquide	liquid propellant
propergol pour roquette	rocket propellant
propergol, poudre	propellant
propulseur d'appoint	booster (2)
propulsion	propulsion
pyromécanisme à gaz	gas actuator
Q	
qualification	qualification (1)
qualification ou homologation finale	type qualification: See "qualification or final qualification"
R	
rampe de lancement	launcher
raté (1)	dud
raté (2)	misfire / failure
rayon de capture	capture radius
rayonnement solaire	solar radiation
réaction par influence	sympathetic reaction
réactions type	type I, (II, III, IV, V) reaction
réactions types	response descriptors
réattachement	reattachment
récupération	recovery
recyclage	recycling
réduction de traînée de culot	base bleed
réduction électrochimique	electrochemical reduction
relais (1)	lead

relais (2)	augmenting charge
relais de détonation	booster (1)
renforcer	hardening
réponse de la munition	munition response
réponse, réaction	response
retard d'allumage	ignition delay
retard d'armement	arming delay
retard de mise à feu	firing control delay
retard pyrotechnique (1)	delay element
retard pyrotechnique (2)	pyrotechnic delay
réutilisation	reuse
revue de programme	peer review
risque	risk
roquette	rocket
S	
saborder	scuttle
sabot	sabot
sécurité	safety
sécurité dans l'âme	bore safety
sécurité de bouche	muzzle safety
sécurité de chargement dans l'âme	loading safety
sécurité de masque	mask safety
sécurité et aptitude au service	safety and suitability for service (S3)
sécurité munitions	ammunition safety
sécurité positive	fail-safe
sécurité système	system safety
sécuritéde lancement	launch safety
sensibilité (1)	sensitiveness
sensibilité (2)	sensitivity
separation en sécurité	safe separation
séquence d'essais	test sequence
servocommande	actuator
seuil de fonctionnernent	all-function level
seuil de mise à feu	all-fire level
seuil de non-feu	no-fire threshold
seuil de non-fonctionnement	no-function threshold
seuil stimulus de non-feu	no-fire threshold stimulus
sévérité d'essai	test severity
signature MURAT	IM signature
situation mécanique	mechanical situation
souffle	blast
souffle an retour	backblast
sous-système	sub-system
sous-systéme de destruction	demolition sub-system
stabilisant	stabilizer
stabilisé par rotation	spin stabilized
stabilité	stability
stérilisation	sterilization
stimulus	stimulus
stimulus de fonctionnement	functional stimulus
stimulus de mise à feu.	firing stimulus
stockage	storage
stockage logistique	logistic storage
stockage tactique	tactical storage

sûreté de fonctionnement	dependability
surpression	overpressure
système	system
systéme cle destruction	demolition system
systéme critique du point de vue de la sécurité	safety critical system
système critique pour la mission	mission critical system
système d'arme	weapon system
systéme de commande de mise à feu	firing control system
systéme de fusée	fuzing system
système de mise à feu	firing system
système de rclais de détonation	detonation relay system
système de relais de stimulus de mise à feu	firing stimulus relay system
système de s sécurité	safety system
système de sécurité de fusée	fuze safety system
système informatisé	computing system
système infornnatisé critique du point de vue de la sécurité	safety critical computing system (SCCS)
T	
taux de variation crête	peak rate of rise
technologie MURAT	IM technology
température atmosphérique	meteorological temperature
température inférieure de conditionnement	lower conditioning temperature (LCT)
température inférieure de tir	lower firing temperature (LFT)
température supérieure de conditionnement	upper conditioning temperature (UCT)
température supérieure de tir	upper firing temperature (UFT)
temps pour atteindre la crête	time to reach peak
tension de mode commune	common mode voltage
tension de mode différentiel	differential voltage
tête militaire	warhead
tolérance aux pannes	failure tolerance
traceur (1)	tracer
traceur (2)	streamer
transition de choc en détonation (TCD)	shock-to-detonation transition (SDT)
transition de déflagration en détonation (TDD)	deflagration to detonation transition (DDT)
transition d'une réaction retardée ou inconnue en détonation	delayed detonation to detonation transition
transition d'une reaction retardée ou inconnue en détonation(TXD)	explosion-to-detonation transition (XDT)
transitoires de potentiel de masse	ground voltage transient
transport	transportation
transport logistique	logistic transportation
transport tactique	tactical transportation
tube choc	shock tube
U	
usage générique	generic role / intended role
V	
validation d'un essai	test validation
vibration	vibration
vitesse initiale (V_0)	muzzle velocity (MV)
Z	
zone dangereuse (1)	danger area
zone dangereuse (2)	unsafe area

zone d'attachement	attachment zone
zone d'attachement de]a foudre	lightning attachment zone
zone de Fraunhofer, champ lointain	Fraunhofer region
zone de Fresnel, champ proche	Fresnel region

3. INTERRELATIONSHIPS BETWEEN TERMS / RAPPORTS ENTRE TERMES

These overviews are intended to demonstrate the relationships between terms applicable in some special areas of concern, and the relations between English and French terminilogy. /

Le but de ces récapitulations est de démontrer les relations entre les termes qui sont applicables dans quelques domaines spécifiques, ainsi que les relations entre les termes anglais et français.

3.1 Explosive Reactions / Réactions Pyrotechniques

ENERGETIC MATERIAL *MATIÈRE ÉNERGÉTIQUE*	APPLICATION *APPLICATION*	TYPE OF REACTION *TYPE DE RÉACTION*	INITIATION *INITIATION*	INITIATOR *INITIATEUR*	INITIATING CHARGE *CHARGE D'INITIATION*
- explosive *- matière explosive*	see below *voir ci-dessous*	- chemical explosion *- explosion chimique*	see below *voir ci-dessous*	- initiator *- initiateur*	see below *voir ci-dessous*
- high explosive *- explosif*	- main charge *- charge principale*	- detonation (super-sonic; shock wave) *- détonation (supersonique; onde de choc)*	- initiation *- amorçage* *- initiation*	- booster - lead *- relais d'amorçage* *- (charge) relais*	- primary or secondary explosive *- explosif primaire ou secondaire*
- secondary explosive *- explosif secondaire*	- booster - lead - fuze / initiating system - detonator *- relais d'amorçage* *- (charge) relais* *- système de fusée/dispositif d'amorçage* *- détonateur*	- detonation (super-sonic; shock wave) *- détonation (supersonique; onde de choc)*	- initiation *- amorçage – initiation*	- initiator - primer *- initiateur* *- bouchon-allumeur*	- primary explosive *- explosif primaire*
- primary explosive *- explosif primaire*	- cap - primer - fuze/initiation system - detonator *- amorce* *- système de fusées/init.* *- détonateur*	- sensitive *- sensible*	- initiation *- amorçage - initiation*	- external stimulus *- stimulus externe*	

ENERGETIC MATERIAL *MATIÈRE ÉNERGÉTIQUE*	APPLICATION *APPLICATION*	TYPE OF REACTION *TYPE DE RÉACTION*	INITIATION *INITIATION*	INITIATOR *INITIATEUR*	INITIATING CHARGE *CHARGE D'INITIATION*
- propellant *- poudre* *- propergol*	- propelling charge - rocket motor - propulsor *- charge propulsive* *- cartouche (mortier)* *- propulseur* *- moteur de roquette*	- deflagration (subsonic, heat flux),combustion, burning *- déflagration, combustion*	- ignition *- allumage*	- primer *- allumeur* *- cartouche* *- TPA?*	
- pyrotechnic *-composition pyro-technique*	- illuminating, incendiary, smoke elements - delay element *- éléments éclairants, incendiares, fumigènes* *- retard pyrotechnique*	- deflagration (subsonic, heat flux), combustion, burning *- déflagration, combustion*	- ignition *- allumage*	- primer *- allumeur*	- ignition charge - primary charge *- charge d'allumage* *- charge primaire*

explosive train	=	*chaîne pyrotechnique :*	detonation, deflagration, combustion (burning) */détonation, déflagration, combustion*
	=	*chaîne explosive :*	detonation / *détonation*
pyrotechnic train	=	*chaîne d'allumage :*	deflagration, combustion (burning) / *déflagration, combustion*

3.2 Initiation Systems and Components - *Systèmes d'amorçage et composants*

ITEM / *ARTICLE*		APPLICATION	
ENGLISH	*FRANÇAIS*	ENGLISH	*FRANÇAIS*
fuze [1]	*fusée* [1]	artillery & mortar projectiles, rifle grenades, bombs	*projectiles d'artillerie et de mortier, grenades à fusil, bombes*
fuze	*bouchon allumeur*	hand grenades	*grenades à main*
fuzing system	*système de fusée*	warheads of self-propelled munitions, munition systems	*munitions autopropulsées, systèmes de munition*
initiation system	*dispositif d'amorçage*	see "fuzing system" and "ignition system"	*voir "système de fusée" et "système d'allumage"*
ignition system	*système d'allumage*	propelling charges, propulsion systems, pyrotechnic charges	*charges propulsives, systèmes de propulsion, charges pyrotechniques*
firing system	*système de mise à feu*	weapon systems, demolition systems	*systèmes d'arme, systèmes de destruction*

3.3 Projectiles and Missiles / Projectiles et misiles

ENGLISH	*FRANÇAIS*	DURING FLIGHT / *EN VOL*	
		PROPULSION/ *PROPULSION*	GUIDANCE / *GUIDANCE*
projectile	*projectile*	no / *non*	no-yes */ non-oui*

[1] point detonating-, time -, proximity fuzes / *fusée à percussion, - chronométrique, - à proximité*

rocket	*roquette*	yes / *oui*	no */ non*
missile	*Projectile autopropulsé*	yes / *oui*	no-yes */ non-oui*
guided missile	*missile*	yes / *oui*	yes */ oui*

3.4 ENVIRONMENT (acceptor) / ENVIRONNEMENT (récepteur)

EVENTS & SITUATIONS *ÉVÉNEMENTS & SITUATIONS*		ENVIRONMENT *ENVIRONNEMENT*		TIME SPACE PÉRIODE	
ENGLISH	*FRANÇAIS*	ENGLISH	*FRANÇAIS*	ENGLISH	*FRANÇAIS*
life cycle (MTDS)	*cycle de vie*	-	-	life time[1]	*durée de vie[1]*
service life cycle (MTS)	*cycle de vie en service*	service environment	*environnement propre au service*	service life[2]	*durée de vie[2]*
-	-	storage and transit conditions (logistics)	*conditions de stockage et de transit (logistiques)*	storage life	*durée de vie en stockage*
-	-	operational conditions & training	*conditions opérationnelles & entrainement*	operational life	*durée de vie opérationnelle*
final use or disposal	*consommation ou mise au rebut*	-	-	end of life	*fin de vie*

[1] including manufacture, service life and end of life / Icomprend fabrication, dur*ée de vie en service et fin de vie*
[2]. including storage life and operational life */ comprend durée de vie en stockage et durée de vie opérationnelle*

3.5 Statisitics / *Statistique*

TERM *TERME*		STIMULUS RANGE *PLAGE DU STIMULUS*	CONFIDENCE LEVEL – RISK *NIVEAU DE CONFIANCE – RISQUE*	
- function level - firing level	*- niveau de fonctionnement* *- niveau de mise de feu*	min - max	reliability and/or safety	*fiabilité et/ou sécurité*
- all-function level - all-fire level	*- seuil de fonctionnement* *- seuil de mise de feu*	high / *élevé*	reliability	*fiabilité*
- no-function threshold - no-fire threshold [1]	*- seuil de non-fonctionnement* *- seuil de non-mise de feu* [1]	low / *bas*	safety	*sécurité*
functional stimulus	*stimulus de fonctionnement*	-	-	-
safety margin	*marge de sécurité*	min - max	-	-

3.6 Internal Ballistics / *Balistique intérieure*

TERM / TERME		APPLICATION	
ENGLISH	*FRANÇAIS*	ENGLISH	*FRANÇAIS*
system design pressure (System DP)	*pression nominale du système (DP du système)*	minimum - weapon and munitions	*minimum - arme et munitions*
maximum operation pressure (MOP)	*pression maximale de fonctionnement (PMF)*	canon systems	*systèmes de canon*
maximum operating pressure (MOP) curve	*courbe de pression maximale de fonctionnement (CPMF)*	mortars	*mortiers*
mortar design pressure (DP) curve	*courbe de pression nominale du tube de mortier*	max - mortar tube	*maxi – tube mortier*
permissible maximum pressure (PMP)	*pression maximale permise (PMP)*	max - weapon or munitions	*maxi – arme ou munitions*
mortar permissible maximum pressure (PMP) curve	*courbe de pression maximale permise pour tube de mortiers (PMP)*	max - mortar tube PMP < DP	*maxi – tube mortier PMP < pression nominale*
mortar safe maximum pressure (SMP) curve	*courbe de pression maximale de sécurité pour mortier*	max - mortar tube (no permanent deformation)	*maxi – tube mortier (pas de déformation permanente)*
proof pressure	*pression d'épreuve*		
mortar proof pressure (PP)	*pression d'épreuve de mortier*	mortar tubes	*tubes mortier*
projectile lower firing temperature upper proof pressure (Projectile LFTUPP)	*pression supérieure d'épreuve du projectile à la température inférieure de tir (LFTUPP du projectile)*	cannon and mortar projectiles	*projectiles canon et mortier*

[1] Alternative terms: MNFS, minimum ignition energy / *Terme alternatif: énergie minimale d'allumage*

TERM / TERME		APPLICATION	
ENGLISH	*FRANÇAIS*	ENGLISH	*FRANÇAIS*
projectile upper firing temperature upper proof pressure (Projectile UFTUPP) /	*pression supérieure d'épreuve du projectile à la température supérieure de tir (UFTUPP du projectile)*	cannon and mortar projectiles	*projectiles canon et mortier*
lower conditioning temperature (LCT)	*température inférieure de conditionnement (LCT)*	any test item	*tout spécimen d'essais*
upper conditioning temperature (UCT)	*température supérieure de conditionnement (UCT)*	any test item	*tout spécimen d'essais*
lower firing temperature (LFT)	*température inférieure de tir (LFT)*	any test item	*tout spécimen d'essais*
upper firing temperature (UFT)	*température supérieure de tir (UFT)*	any test item	*tout spécimen d'essais*

TERMS AND DEFINITIONS / TERMES ET DÉFINITIONS

The description of each term embraces:

- the term;
- the definition(s);
- elucidations and alternative definitions;
- within brackets [ ]: related terms -synonyms are marked with an asterisk; and
- reference to source documents and other documents specifically related to the subject term. [1]

The definitions are generally applicable to military materiel, weapon systems, munitions and explosives, unless a restriction is given in front of the definition or within the text of the definition. If a definition applies to materiel in general, it applies also to weapon systems and munitions. If a definition applies to weapon systems, it applies also to munitions. Terms and definitions dedicated to fuzing systems are in most cases applicable to fuzes, initiating systems, ignition systems and firing systems.
A term with several connotations is qualified as such, e.g., *"Cannon and mortar ammunition".*
If a definitions has been copied without change from a source document, the reference to that source document is within brackets (..) immediatley after the definition. Other sources are referred to by "See also .." or "Ref. ... ".

La description de chaque terme comprend:

- le terme;
- la ou les définitions;
- des éclaircissements et des définitions alternatives;
- entre parenthèses [ ], des termes apparentés – les synonymes sont marqués d´un astérisque, et
- les références aux documents d'origine et aux autres documents concernant le terme en question.[1]

Les définitions sont généralement applicables aux matériels militaires, systèmes d'arme, munitions ou matières explosives, sauf si une restriction est donnée en tête ou dans le texte de la définition. Si une définition est applicable à du matériel en général, elle est également applicable aux systèmes d'arme et aux munitions. Si une définition est applicable aux systèmes d'arme, elle est également applicables aux munitions. Les termes et définitions consacrés aux systèmes de fusée sont, dans le plupart des cas, aussi applicables aux fusées, dispositifs d'amorçage, dispositifs d'allumage et aux systèmes de mise à feu.

Si un terme a plusieurs significations différentes, l'application de la définition sera précisée, par exemple *"Munitions pour canons et mortiers:…*".
Dans le cas une définition a été reprise du document d'origine sans modification, la référence est donnée immédiatement après la définition et entre parenthèses (..). D'autres sources sont indiquées "Voir aussi .. " ou "Réf. ... ".

---

[1] For a STANAG only its number is mentioned. The "Glossary of Terms of the Ordnance Board (UK) is mentioned only as 'OB'; the "Dictionnaire de Pyrotechnie of the GTPS (FR) only as 'GTPS'.

Pour les STANAG seulement le numéro est mentionné. Le The "Glossary of Terms of the Ordnance Board (UK) est indiqué comme 'OB'; le "Dictionnaire de Pyrotechnie du GTPS" (FR) comme "GTPS".

accelerated life testing Exposure of materiel under laboratory conditions to more severe environmental stresses than those experienced in service life and which are expected to reproduce the same degradation as those which are expected during the life cycle of the materiel. 1. Deterioration mechanisms are: chemical reactions, mechanical fatigue, influence of moisture, etc. 2. Models are often used to calculate special test severities for accelerated life testing (e.g., Arrhenius, Weibull, Mie).	**essai de vieillissement accéléré** Exposition en laboratoire d'un matériel à des conditions d'environnement plus sévères que celles qu'il subira pendant la durée de vie en service et sont attendues pendant le cycle de vie, et qui sont sensées de reproduire les mêmes dégradations du matériel. 1. Des mécanismes de dégradation sont: des réactions chimiques, fatigue mécanique, influence d'humidité, etc. 2. Des modèles sont souvent appliqués pour calculer des niveaux plus sévères pour les essais de vieillissement accéléré (p.ex. Arrhenius, Weibull, Mie).
acceptable performance The ability of materiel to perform its prime functions. The minimum level of performance which is acceptable should be stated in the requirements documents. [suitability for service, reliability]	**performance acceptable** Aptitude d'un matériel à remplir ses fonctions principales. Le niveau minimal de performance acceptable doit être indiqué dans les spécifications. [aptitude au service, fiabilité]
accident: See "mishap".	**accident** -
action integral - *Lightning*: See STANAG 4236.	**intégrale d'action** - *Foudre*: Voir STANAG 4236.
acoustic circuit *Mines*: A mine circuit which responds to the acoustic field of the target. (AAP-6)	**mise de feu acoustique** *Mines*: Mise de feu conçue pour répondre au champ acoustique d'un objectif. (AAP/6)
acoustic mine *Sea mines:* A mine with an acoustic circuit which responds to the acoustic signature of a ship. See also AAP-6	**mine à dispositif actif** *Mines navales:* Mine dont la mise de feu est actionnée par la signature acoustique d'un bâtiment. Voir aussi AAP-6.
action time The elapsed time from application of primer initiation energy to the moment of projectile base exit from the muzzle of the barrel. [firing interval* , ignition delay] Ref: 4224, 4493.	**durée du coup de feu** Temps s'écoulant entre l'application de l'énergie d'initiation de l'amorce et le moment où le culot du projectile sort de la bouche du canon. [temps de bouche*, délai de mise à feu] Réf: 4224, 4493.
active mine A mine actuated by the reflection from a target of a signal emitted by the mine. (AAP-6) [passive mine]	**mine à dispositif actif** Mine déclenchée par la réflexion sur un objectif d'un signal qu'elle émet. (AAP-6) [mine passive]
actuate *Mines* : To operate a mine-firing system by an influence or a series of influences in such a way that all the requirements of the mechanism for firing or for registering a target count, are met. (AAP-6)	**déclencher** *Mines*: Faire fonctionner la mise de feu d'une mine par action à distance, ou une série d'actions à distance, de manière à remplir toutes les conditions requises pour que cette mise de feu fonctionne ou que le compteur des objectifs avance d'un cran. (AAP-6)

actuator A mechanism that furnishes the force required to displace a control surface or other control element. (AAP/6) [gas actuator]	**servocommande** Dispositif fournissant la force nécessaire au déplacement d'une gouverne ou de toute autre appareil de commande, [pyromécanisme à gaz]
air discharge A transfer of electrical charge through the air between bodies of different electrical potential. [electrostatic discharge, contact discharge] Ref. 4235.	**décharge aérien** Transfert d'une charge électrostatique dans l'air entre des corps de potentiels électrostatiques différents. [décharge électrostatique, décharge par contact direct] Réf. 4235.
air launched munition (ALM) Any device containing explosive materials, which is launched or released from an aircraft, with the exception of aircraft gun ammunition. Ref: 4325.	**munition à lanceur aérien (MLA)** Tout dispositif contenant des matières explosives, lancé ou largué d'un aéronef, à l'exception des munitions de canon d'aéronef. Réf: 4325.
all-arm distance After firing the munition, the minimum distance between the weapon and the launched munition where the fuze is armed. [arming delay : armed] Ref : AOP-20.	**distance d'armement certain** Distance minimale entre l'arme et la munition pour laquelle la fusée est armée après tir. [fiabilité, distance de non-armement certain] Réf : AOP-20
all-fire level The value of a stimulus which, under specified conditions, is predicted to cause an explosive material or an explosive component to function, with a stated probability . 1. This value is statistically expressed as the lowest level of the functional stimulus (e.g., energy, impulse, drop height) at which the probability of firing is sufficiently high (e.g., $1\text{-}10^{-2}$ at a specified level of confidence: e.g., 95%, 1-sided lower level.) 2. The all-fire threshold is a function of the type of stimulus. [all-function level, firing level, reliability, stimulus level, no-fire threshold]	**seuil de mise à feu** Valeur d'un stimulus dans des conditions spécifiées, le fonctionnement d'une matière explosive ou d'un composant pyrotechnique, avec une probabilité spécifiés. 1. La valeur est exprimée en termes statistiques comme le niveau minimal du stimulus de fonctionnement (énergie, impulsion, hauteur de chute. auquel la probabilité de mise à feu est suffisamment grande (p.e. 1% avec un degré de confiance spécifié: p.e. 95%, unilatéral, niveau le plus bas). 2. Le seuil de mise à feu est fonction du type de stimulus. [seuil de fonctionnement, niveau de fonctionnement, fiabilité, niveau du stimulus, seuil de non-mise à feu]
all-function level The minimum value of a stimulus which, under specified conditions, is predicted to cause a device or component to function, with a stated probability and confidence level. The "all-fire level" is the all-function level of explosive events. [stimulus level, no function level]	**seuil de fonctionnement** Valeur minimale d'un stimulus, dont il est attendu ou démontré qu'il provoquera, dans des conditions spécifiées, le fonctionnement d'un dispositif ou d'un composant, avec une probabilité spécifiée et un niveau de confidence spécifiés. Le "seuil de mise à feu" est le seuil de fonctionnement des événements pyrotechniques. [niveau du stimulus, seuil de non-fonctionnement]

ammunition An item containing one or more projectiles, together with propellant needed to impart velocity to the projectile(s) which are propelled from a reusable launcher. The projectiles may be a inert or contain a high explosive, smoke generator or other energetic composition. The launcher may be a gun. The NATO and US term "ammunition" covers "munition" as defined in this glossary. Ammunition is a sub-set of munitions. [munition].	**munition de tir** Article contenant un ou plusieurs projectiles avec le propergol nécessaire pour communiquer de la vitesse au(x) projectile(s) tirés d'un lanceur réutilisable. Les projectiles peuvent être inertes ou chargés d'explosifs, fumigène ou autre substance énergétique. Le terme "munition" couvre l'anglais "munition" et "ammunition".
ammunition safety : See "safety".	**sécurité munitions** : Voir "sécurité".
antenna mine *Sea mines*: A mine fitted with antennae which, when touched by a ship, activates the mine on contact. See also AAP-6.	**mine à antennes** *Mines navales:* Mine équipée d'antennes qui, lorsqu'elles touchent un bâtiment, déclenche la mine au contact. Voir aussi AAP-6.
antilift device *Land mines:* A device designed to actuate a mine if the mine is moved. (AAP – 6)	**dispositif antirelevage** *Mines terrestres:* Dispositif conçu pour déclencher une mine, si elle est déplacée. (AAP-6) [dispositif anti-perturbation]
antipersonnel mine *Land mines:* A mine designed to cause casualties to personnel. [mine] (AAP/6)	**mine antipersonnel** *Mines terrestres*: Mine destinée à causer des pertes en personnel. (AAP/6)
antitank mine *Land mines:* A mine designed to immobilize or destroy a tank. [mine] (AAP/6, AAP-19/A)	**mine antichar** *Mines terrestres*: Mine conçue pour immobiliser ou détruire un char de combat. (AAP/6, AAP-19/A)
antiwatching device *Sea mines:* A device fitted in a moored mine which causes it to sink should it rise to the surface, so as to prevent the position of the mine or minefield being disclosed. [watching mine]. (AAP/6)	**dispositif anti-repérage** *Mines navales:* Dispositif incorporé à une mine à orin destiné à la faire couler si elle vient en surface, de façon à empêcher que sa position ou celle du champ de mines soit révélée. (AAP/6)
approved design *Materiel:* The design of which has been admitted for military use by the accredited authority, based on the results of the tests and assessments in accordance with promulgated NATO publications and agreements. This design is completely defined by a government approved data package, consisting of: the material specifications, the product and component drawings and specifications, the acceptance criteria and the users' instructions. [qualification, type qualification, new munition]	**conception adoptée** *Matériel :* Conception qui a été adoptée pour l'emploi militaire par l'autorité accréditée, basée sur les résultats des essais et des évaluations conformément aux publications et accords promulgués par l'OTAN. Cette conception est entièrement définie par une liasse technique approuvée par le gouvernement, et qui comprend: les spécifications des matières premières, les plans et les spécifications du produit et de ses composants, les critères d'acceptation et les instructions pour les usagers. [qualification, qualification de type, munition nouvelle]

arc The phenomena characterizing an electrostatic discharge: luminosity, temperature and current. [electrostatic discharge] Ref. 4235, 4236 and 4327.	**arc** Phénomènes qui caractérisent une décharge électrostatique : luminosité, température et courant. [décharge électrostatique] Réf. 4235, 4236 et 4327.
arm To make a fuzing or firing system ready for functioning by removal of all the safety constraints thus permitting the munition to be fired on receipt of the specified firing stimulus and to function as intended. From Glossary OB. See also AAP-19: arming. [armed, commit-to-arm] Ref: 4187.	**armer** Rendre un système de fusée ou de mise de feu prêt à fonctionner, en neutralisant toutes les contraintes de sécurité, ce qui permet la mise à feu du système de le fonctionnement voulu dès réception de l'impulsion de mise à feu spécifiée. Tiré du Glossaire OB. Voir aussi AAP-19 : armement. [armé, mise en état de service] Réf: 4187
armed 1. *Suitability for service of a weapon system, munition or (sub)system:* The state of the (sub-)system when all safety breaks and switches have been made ineffective with the exception of the single function which would initiate *the* intended operation of the system. 2. *Safety of a weapon system, munition or (sub)system:* The system is considered armed when any firing stimulus can cause the system to function. - *fuzing systems employing explosive train interruption*: when the interruption (interrupter(s) position(s)) is such that the probability of propagation of the explosive train exceeds a specified value (e.g., 0.05 at the 95% single-side lower level of confidence); - *fuzing systems employing a non-interrupted explosive train*: when the stimulus available for delivery to the initiator equals or exceeds the initiator's no-fire threshold. [armed configuration*, disarm, unarmed, test configuration] Ref: 4157, 4187, 4324, 4497, AOP-16, AOP-20.	**armé** 1. *Aptitude au service d'un système d'arme, de munition ou de (sous-)système:* État du (sous-)système lorsque l'ensemble des interrupteurs et dispositifs d'interruption liés à la sécurité ont été levés à l'exception de l'unique fonction qui initierait le fonctionnement *projeté* du système. 2. *Sécurité d'un système d'arme, de munition d'un (sous-)système:* Le système est considéré comme étant armé lorsqu'une énergie de mise à feu peut provoquer son fonctionnement. - *systèmes de fusée équipés d'une chaîne pyrotechnique interrompue*: lorsque la position du(des) 'interrupteur(s) est telle que la probabilité de propagation de la chaîne pyrotechnique dépasse une valeur spécifiée (p.ex. 0,05 avec un niveau de confiance unilatéral de 95%); - *systèmes de fusée équipés d'une chaîne pyrotechnique non-interrompue*: lorsque le stimulus disponible pour être fourni à l'initiateur est égale ou supérieur à ou excède le seuil de non-feu de l'initiateur. [configuration armée*, désarmement, non armée, configuration d'essais] Réf: 4187, 4324, 4497.
armed configuration: See "armed".	**configuration armée** : Voir "armé".
armed mine A mine from which all safety devices have been withdrawn and, after laying, all automatic safety features and/or arming delays have operated. Such a mine is ready to receive a target signal, influence or contact. (AAP-6)	**mine armée** Mine dont, après mouillage, tous les dispositifs automatiques de sécurité et/ou de réceptivité différée ont fonctionné ou ont été ôtes. Une telle mine est prête à recevoir un objectif, un signal, une influence ou un contact.(AAP-6)
arming: See "arm", also AAP-6 and AAP-19	**armement**: Voir "armer", aussi AAP-6 et AAP-19

arming delay *Weapon launched munitions:* The time elapsed or distance travelled between initiation of commit-to-arm, launch or deployment and the arming of the fuzing system. Ref: 4187, AOP-20. *Hand emplaced munitions*: The time elapsed from final commitment to the arming process until the armed condition is attained. Ref. 4497, AOP-31. [arming time, arming distance, all-arm distance]	**retard d'armement** *Munitions lancées d'une arme :* Temps écoulé ou distance parcourue entre le moment ou le point de démarrage du cycle d'armement irréversible, et l'armement de la fusée. (4187, AOP-20) *Munitions à positionnement manuel :* Temps écoulé depuis l'engagement final du processus d'armement jusqu'à obtention de l'état armé. (4497, AOP-31) [délai d'armement, distance d'armement] Réf: 4187, 4497, AOP-31.
arming delay device *Mines*: A device fitted in a mine to prevent it being actuated for a preset time after laying. (AAP-6)	**dispositif de réceptivité différée** *Mines*: Dispositif équipant une mine et l'empêchant d'être influencée pendant un certain temps fixé à l'avance, après son mouillage ou sa pose. (AAP-6)
arming distance The distance from the launcher or release device to the point where the fuzing system arms. [arming distance]	**distance d'armement** Écartement entre le lanceur ou le système de relâche jusqu''a l'endroit où le système de fusée est armé.
arming range: See "arming distance"	**distance d'armement**
assessment *Military materiel:* Set of theoretical analyses and tests defined by a cognizant authority and intended to verify the performance, reliability and safety of a materiel with regard to the specified requirements. *Explosives*: The evaluation of properties of an explosive, including the results of appropriate tests, to determine its relationship, with particular regard to safety, to other known explosives already in service use. (AOP-7) [qualification, characterization, classification] Ref: AOP-15, AOP-39; 4170.	**évaluation** *Matériel militaire*: Ensemble des analyses théoriques et essais définis par une autorité compétente et destinés à vérifier la performance, la fiabilité et la sécurité d'un matériel par rapport aux exigences spécifiées. *Matières explosives:* Évaluation des propriétés d'une matière explosive comprenant les résultats des essais appropriés, pour en déterminer les rapports, en particulier sur le plan de la sécurité, avec d'autres matières explosives connues qui sont déjà en service. (4170) [homologation, caractérisation, classification] Réf: 4170, AOP-7, 4297, AOP-15, 4439, AOP-39.
attachment zone *Lightning, interaction with weapons*: See STANAGs 4236 and 4327.	**zone d'attachement** *Foudre, interaction avec les armes*: Voir les STANAG 4236 et 4327.
augmenting charge *Mortar and howitzer ammunition*: Additional propelling charge used to vary the range of the munition. It is composed of the propellant and its container which may be combustible. One or more augmenting charges, possibly of different types, can be used for one munition. Ref: 4225.	**relais** (2). *Munitions de mortier et d'obusier*: Charge additionnelle utilisée pour faire varier la portée de la munition. Elle est composé de poudre propulsive et d'une enveloppe qui peut être combustible. Un ou plusieurs relais, éventuellement de différents types, peuvent être utilisés dans une munition. Réf: 4225.

automatum *Computer systems*: A machine or controlling mechanism designed to follow automatically a predetermined sequence of operations or respond to encoded instructions and correct errors or deviations occurring during operation. Plural: automata. Ref: 4404.	**automate** *Systèmes informatisés*: Matériel ou mécanisme de contrôle conçu pour suivre automatiquement une séquence prédéterminée d'opérations ou répondre à des instructions codées et corriger les erreurs ou écarts survenant en cours de fonctionnement. Réf: 4404.
availability The probability an item is in operable and committable state at the start of a mission when the mission is called for at an unknown (random) time. (ARMP-1) For demolition systems, the unknown (random. time is the moment of firing the system, e.g., the actuation of the exploder. [reliability, maintainability]	**disponibilité** Probabilité de réussite de l'utilisation et de l'engagement d'un article au début d'une mission, lorsque l'ordre de mission intervient à un moment inconnu (aléatoire). (ARMP-1) Pour des systèmes de destruction, le "moment aléatoire" est le moment que la mise à feu est démarrée, p.e. l'action de l'exploseur. [sûreté de fonctionnement, fiabilité, maintenabilité]
backblast The rearward blast of (hot) propulsion gases when the weapon is fired, escape from the muzzle brake of recoil weapons and from the aft opening (venturi) of recoilless weapons. The blast may contain fragments and particles swept up from the ground. (WAS)	**souffle en retour** Souffle de gaz propulsives (chauds) qui s' échappent du frein de bouche quand l'arme est tiré des armes à recul et de la tuyère des armes sans recul. Le souffle peur contenir des fragments et des particules emportés du sol.
base bleed Reduction of the aerodynamic drag of a shell by means of an auxiliary device in the shell consisting of propellant in a combustion chamber. The propellant gases flow out into the wake behind the shell, enhancing the pressure and thereby reducing drag.	**réduction de traînée de culot** Réduction de la traînée aérodynamique d'un projectile au moyen d'un dispositif additionnel du projectile qui comprend du propergol dans une chambre de combustion. Les gaz de combustion s'écoulent dans le sillage du projectile en augmentant la pression et de cette façon réduisant la traînée.
battleshort The capability to bypass certain safety features in a system to ensure completion of the mission without interruption due to the safety feature. Examples of bypassed safety features are circuit overload protection, and thermal protection. Ref: 4404.	**contournement de dispositifs de sécurité** Capacité de contourner certains dispositifs de sécurité d'un système pour mener une mission à bien, sans interruption provoquée par ces dispositifs de sécurité. Exemples de dispositifs de sécurité contournables sont les protection de surcharge de circuit et protecteurs thermiques. Réf: 4404.
bio-degradation - *Disposal:* See STANAG 4518	**biodégradation** - *Mise au rebut:* Voir STANAG 4518
black powder Heterogeneous explosive substance composed of potash nitrate (oxidizer), sulphur, and charcoal reducer. It may come in various forms: coarse or fine grains, powder or pastilles. [gun powder]	**poudre noire** Matière explosive hétérogène formée de nitrate de potassium (oxydent), de soufre et de charbon de bois (réducteur). Elle peut se présenter sous différentes formes: gros grains, grains fine, pulvérin ou pastilles. (GTPS)

blast The propagation through the air of a high pressure wave, produced by the deflagration or detonation of an explosive material. (GTPS) [backblast] Severe blast pressure may cause impairment of hearing. High levels may cause injury to the larynx. Extreme levels may even cause fatal injury (collapse of the lungs, etc.)	**souffle** Propagation dans l'air d'une surpression produite par la déflagration ou la détonation d'une matière explosive. (GTPS) Une pression de souffle élevée peut affecter l'ouïe. Des niveaux très élevés peuvent causer les blessures au larynx. Des niveaux extrêmes pourront m^me causer des blessures fatales (effondrement des poumons, etc.)
blasting cap: See "detonator".	**détonateur -**
blasting machine: See "exploder".	**exploseur -**
bonding (1) The strength of the adhesion of an explosive filling to its receptacle. Examples: high explosive projectiles filling and propellant grains for missile or rocket motors.	**adhésivité** Solidité de l'adhésion d'un chargement explosif à son enveloppe. Exemples: chargement explosif d'obus explosifs et de blocs de poudre de moteurs de missile ou de fusée. [adhésion*]
bonding (2) *Electrical tests*: The process of making a low resistance electrical connection between parts or between parts and the structure. Ref: 4327.	**continuité électrique** *Essais électriques* : Le processus par lequel s'opère un contact électrique de faible résistance entre les éléments, ou un élément et la structure. Réf: 4327.
booby trap An explosive or nonexplosive device, deliberately placed to cause casualties when an unsuspecting person disturbs an apparently harmless object or performs a normally safe act. See also AAP-6.	**piège** Dispositif fonctionnant avec ou sans une charge explosive, placé de façon à infliger des pertes en personnel chaque fois qu'une personne sans méfiance déplace un objet inoffensif d'apparence ou accomplit un geste considéré ordinairement sans danger. Voir aussi AAP-6.
booster (1) *Part of an explosive train*: A high-explosive element sufficiently sensitive so as to be actuated by an upstream explosive element in the explosive train and powerful enough to cause functioning of a subsequent downstream explosive element. [booster charge*, lead, primary explosive, secondary explosive, detonation] Ref: 4363.	**relais de détonation** *Élément d'une chaîne pyrotechnique*: Elément explosif suffisamment sensible pour être initié par un composant pyrotechnique en amont de la chaîne pyrotechnique et suffisamment puissant pour faire fonctionner une charge explosive en aval. [relais pyrotechnique d'amorçage *, charge relais, explosif primaire, explosif secondaire, détonation] Réf: 4363.
booster (2) *Subsystem of a propulsion system*: Propulsor intended to provide an additional thrust (mainly during take-off), either placed in line or at the outside of the structure. Different definition in AAP–6.	**propulseur d'appoint** *Sous-système d'un système de propulsion*: Propulseur destiné à donner un surcroît de poussée (principalement au décollage), dans l'axe ou accolé à l'extérieur de la structure. [propulseur auxiliaire*]
booster and lead explosive: See "booster explosive".	**explosif de relais (de détonation)** : Voir "explosif de relais pyrotechnique".

booster explosive Explosive material used to augment and transmit a detonation reaction (initiated by a primary explosive), with sufficient energy to initiate a stable detonation in a receptor charge or the main charge of an explosive train. For fuzes, it is a secondary explosive which has demonstrated to be sufficiently safe to be used beyond the shutter (fuze interrupter) or in unshuttered fuzing systems. [booster (1), booster and lead explosive*] Ref: 4170, , 4463, AOP-7, AOP-20, AOP-26.	**explosif de relais pyrotechnique** Matière explosive utilisée pour amplifier et transmettre une réaction détonative (initié par l'explosif primaire), possédant suffisamment d'énergie pour initier une détonation stable dans une charge réceptrice ou dans la charge principale d'une chaîne pyrotechnique. Pour les fusées, il s'agit d'un explosif secondaire, jugé suffisamment sûr pour être placé au-delà de l'interrupteur de la fusée ou pour être utilisé dans des systèmes de fusée à chaîne pyrotechnique non interrompue. [relais de détonation, explosif de relais de détonation] Réf: 4170, 4463, AOP-7, AOP-20, AOP-26.
bore safety The property that enables ammunition and its constituent parts to withstand the bore phase of firing with the required level of safety. (WAS). See also AAP-6, boresafe fuze. [loading safety, muzzle safety, mask safety].	**sécurité dans l'âme** Caractéristique qui permet la munition et ses éléments constitutifs de résister aux effets du tir dans le tube au niveau de sécurité requis. Voir aussi AAP-6,fusée à sécurité de trajet dans l'âme. [sécurité de chargement, sécurité de bouche, sécurité de masque].
bottom mine A mine with negative buoyancy which remains on the sea-bed. (AAP-6) [ground mine*]	**mine de fond** Mine à flottabilité négative qui repose sur le fond de la mer. (AAP-6)
bouquet mine *Sea mines*: A mine in which a number of buoyant mine cases are attached to the same sinker, so that when the mooring of one mine is cut, another mine rises from the sinker to its set depth. (AAP-6)	**mine bouquet** *Mines navales*: Ensemble constitué par un certain nombre de mines à flottabilité positive fixé sur un même crapaud. Quand l'orin d'une mine est coupé par une drague, une autre mine se détache du crapaud pour prendre l'immersion pour laquelle elle a été réglée. (AAP-6)
bulk current injection (BCI) *Lightning tests: :* An injection technique used to drive currents through a cable by magnetic induction from a current transformer fed from a generator. The ratio between the voltage at the current transformer and the current induced in the cable under test is called the "transfer impedance". Ref. 4324 and 4416.	**injection de courant sur un toron** *Foudre*: *Simulations foudre*: Technique d'injection utilisée pour faire circuler des courants dans un câble, par induction magnétique à partir d'un transformateur de courant alimenté par un générateur. Le rapport entre la tension à l'entrée du transformateur de courant et le courant induit dans le câble soumis à l'essai est appelé "impédance de transfert". Réf. 4324 et 4416.
burning The propagation of an exothermic reaction by conduction, convection and radiation. (OB) The term "burning" is sometimes used to describe a special type of explosive reaction and its effects on the environment. [combustion*]	**combustion** Réaction exothermique et auto-entretenue par conduction, convection et rayonnement. (OB) Le terme "combustion" est parfois utilisé pour décrire un type de réaction explosive spécifique et ses effets sur l'environnement. Il existe une définition plus précise de combustion dans le dictionnaire de pyrotechnie du GTPS.

cannon Generic definition for a wide variety of weapons. See STANAGs 4432 and 4516.	**canon** Définition générique pour une grande variété d'armes. Des définitions spécifiques sont données dans les STANAG 4432 et 4516.
cap: See "primer".	**alvéole**: Voir "amorce".
capture distance *Lightning* - See STANAG 4236.	**distance de capture** *Foudre:* Voir STANAG 4236.
capture radius *Lightning* - See STANAG 4236.	**rayon de capture** *Foudre:* Voir STANAG 4236.
cargo *In a projectile or missile warhead*: A payload expelled or separated from the carrier. [payload]	**charge cargo** *Dans un projectile ou une tête de fusée ou de missile:* Charge utile expulsée ou séparée du système porteur. [charge utile, sous-munition]
cartridge Ammunition, ready for firing, wherein the propelling charge(s), its primer, and the projectile with its fuze are assembled in one unit for handling and firing. Types of cartridged ammunition: gun, cannon, howitzer, mortar, small calibre ammunition. [round]	**cartouche** (1) Munition prête à être tirée, où la ou les charges propulsives et le projectile avec sa fusée sont assemblés dans une unité pour la manipulation et le tir. Des munitions pour canon, obusier, mortier et de petit calibre sont souvent encartouchées. [coup complet]
cavity The portion of the projectile that accepts the fuze. [intrusion] Ref: 2916.	**logement** Partie du projectile qui abrite la fusée. [intrusion] Réf: 2916.
chamber pressure The pressure existent within the weapon chamber at any time as a result of the burning of the propellant charge. With some pressure gauges (crushers), only the peak pressure can be measured. [pressure, peak pressure] Ref: 4224, 4493, 4110.	**pression de chambre** Pression qui existe dans la chambre de l'arme à tout moment, résultant de la combustion de la charge propulsive. Avec certains capteurs (blocs crusher) on peut seulement mesurer la pression maximale. [pression, pression crête] Réf: 4224, 4493, 4110.
characterization The determination of attributes of a materiel or a substance which define the capability of a materiel or a substance to fulfil particular requirements. [assessment, evaluation] Ref: AOP-15, 4363, 4560.	**caractérisation** Détermination des caractéristiques d'un matériel ou d'une matière qui définissent l'aptitude d'un matériel ou d'une matière de satisfaire des exigences particulières. [évaluation] Réf: AOP-15, 4363, 4560.
charge (1) The explosive filling of a munition or a munition component. See also "demolition charge".	**charge** (1) Contenu explosif d'une munition ou d'un composant de munition. Il existe une définition plus complète de charge dans le dictionnaire de pyrotechnie du GTPS . Voir aussi "charge de destruction".
charge (2) *Lightning*: See STANAGs 4236 and 4327.	**charge** (2) *Foudre*: Voir les STANAG 4236 et 4327.
charge	**chargement** : Voir "charge (1)".

chemical conversion *Disposal*: See STANAG 4518.	**conversion chimique** *Mise au rebut:* Voir STANAG 4518.
chemical decontamination *Disposal*: The process of making any contaminated object, person or area safe for unprotected personnel by chemically destroying, physically removing, sealing in, or otherwise making harmless the chemical agent on or around it. Ref: 4518.	**décontamination chimique** *Mise au rebut:* Action qui conduit à rendre sûr tout objet, personne ou endroit contaminés par destruction chimique, transformation physique ou isolement du polluant chimique ou, qui permet de le rendre inoffensif pour le personnel n'ayant pas de protection. Réf: 4518.
chemical mine A mine containing a chemical agent designed to kill, injure, or incapacitate personnel or to contaminate materiel or terrain. (AAP-6)	**mine chimique** Mine contenant un agent chimique destiné à tuer, blesser ou diminuer l'efficacité des combattants ou à contaminer le matériel ou le sol. (AAP-6)
classification of lightning effects *Weapon system testing:* See STANAGs 4236 and 4327.	**classement des effets de la foudre** *Essais de systèmes d'arme*: Voir les STANAG 4236 et 4327.
climatic category A classification of world climate in terms of a set of temperature and humidity conditions. Ref: 2895.	**catégorie climatique** Classification du climat du globe en fonction d'un ensemble de conditions de température et d'humidité. Réf: 2895.
closed detonation *Disposal*: To place a munition in a closed chamber and to initiate it with an explosive charge. The evolved gases and solid residues can then be collected and treated in an environmentally safe manner. Ref: 4518.	**détonation en milieu fermé** *Mise au rebut:* Action qui consiste à placer une munition dans une chambre hermétique, puis à l'initier avec une charge explosive. Les effluents produits (gaz et résidus solides) peuvent ensuite être collectés et traités d'une manière propre pour l'environnement. Réf: 4518.
cloud to ground flash *Lightning*: See STANAG 4236.	**éclair du nuage au sol** *Foudre: Voir STANAG 4236.*
coefficient of linear thermal expansion *Testing of explosive materials:* The change in length per degree of temperature change divided by the initial length. [linear thermal expansion] Ref 4525	**coefficient d'expansion thermique linéaire** *Essais de matières explosives:* Changement de la longueur par centigrade de changement de température divisé par la longueur initiale. [expansion thermique linéaire] Réf 4525.
combination circuit *Mines:* A firing circuit which requires actuation by two or more influences, either simultaneously or at a pre-ordained interval, before the circuit can function. (AAP-6) [combined circuit*]	**mise de feu combinée** Circuit de mise de feu qui demande à être actionné par deux ou plusieurs influences, soit simultanées, soit selon une séquence préétablie. De ce point de vue, les mise de feu acoustiques combinées utilisant plusieurs gammes de fréquence entrent dans cette catégorie. (AAP-6)
combustion: See burning.	**combustion** -

commit-to-arm Actions carried out upon a munition, following which a fuzing, initiating or firing system, irreversibly, will arm. Ref: 4187, AOP-31.	**mise en état de service** Actions engagées sur une munition, de sorte que le système de fusée, d'amorçage ou de mise de feu soit irréversiblement armé. Réf: 4187, AOP-31.
common cause failure Failure of two or more components due to a single cause. For example two or more components may fail due to the single cause of heating. The mode of failure may not be the same. Common causes may be conditions or events internal within the system or external, from its environment. Ref: 4187, 4497.	**défaillance de cause commune** Défaillance de deux composants ou plus due à une seule cause. Par exemple, plusieurs composants pourraient faillir par la seule cause d'échauffement. Le mode de défaillance pourrait être différent. Les causes communes peuvent être des conditions ou des événements internes dans le système ou extérieures provenant de son environnement. Réf: 4187, 4497.
common mode failure Failure of two or more components in the same mode. For example two or more components such as switches may fail in a single mode such as an open circuit. The cause of failure may not be the same. Ref: 4497.	**défaillance de mode commun** Même mode de défaillance de deux ou plusieurs composants. Par exemple, deux ou plusieurs composants pourraient faillir dans un seul mode comme "circuit ouvert". La cause de la défaillance pourrait ne pas être la même. Réf: 4497.
common mode voltage *Lightning tests:* See STANAG 4327.	**tension de mode commun** *Essais foudre*: Voir STANAG 4327.
comparison explosive An in-service explosive material with proven safety characteristics whose properties are used to assess the relative safety and suitability of a new explosive intended for use in a similar role. Ref: 4170.	**matière explosive de comparaison** Matière explosive déjà en service dont les caractéristiques de sécurité prouvées sont utilisées pour évaluer la sécurité et l'aptitude à l'emploi d'une nouvelle matière explosive destinée à être utilisée dans un usage similaire. Réf: 4170.
compatibility 1. *General*: Capability of two or more items or components of equipment or material to exist or function in the same system or environment without mutual interference. (AAP-6) 2. *Munitions*: Absence of reactions between explosives and other component within a munition, leading to unacceptable changes in physical properties, sensitiveness or sensitivity of explosives in the munition. Ref: 4147.	**compatibilité** 1. *En général*: Aptitude, pour deux ou plusieurs pièces or composants d'un équipement ou d'un matériel, de coexister ou de fonctionner à l'intérieur d'un même système ou dans un même environnement sans qu'il y ait interférence mutuelle. (AAP-6) 2. *Munitions:* Absence de réactions entre les matières explosives et les autres composants dans une munition, qui entraînent des modifications inacceptables des propriétés physiques ou de sensibilité des matières explosives dans la munition. Réf: 4147.
complete system test: See "whole system test".	**essai sur système complet -**
complete weapon test: See "whole weapon test".	**essai sur arme complète** -
composite propellant Propellant composed of energetic materials bound together using a binder. Ref: 4581.	**propergol composite** Propergol constitué par un mélange de matières énergétiques et un liant. Réf: 4581.

compressive deformation *Testing explosive materials*: See STANAG 4443.	**déformation en compression** *Essais matières explosives:* Voir STANAG 4443.
compressive modulus of elasticity *Testing explosive materials*: See STANAG 4443.	**module d'élasticité en compression** *Essais matières explosives:* Voir STANAG 4443.
compressive proportional limit *Testing explosive materials*: See STANAG 4443.	**limite proportionnelle en compression** *Essais matières explosives:* Voir STANAG 4443.
compressive rho-point *Testing explosive materials*: See STANAG 4443.	**en compression** *Essais matières explosives:* Voir STANAG 4443
compressive strain *Testing explosive materials*: See STANAG 4443.	**effort de compression** *Essais matières explosives:* Voir STANAG 4443.
compressive stress *Testing explosive materials*: See STANAG 4443.	**contrainte en compression** *Essais matières explosives:* Voir STANAG 4443.
computing system A device(s) and its associated interfaces capable of accepting and storing computer data, executing a systematic sequence of operations on computer data, or producing control outputs. Such devices can perform substantial interpretation, computation, communication, control, or other logical functions. Ref: 4404.	**système informatisé** Système et ses interfaces associées, capable d'accepter et de stocker des données informatiques, d'exécuter une séquence automatique d'opérations sur des données informatiques, ou d'assurer des contrôles de sorties. De tels systèmes peuvent exécuter des interprétations, des calculs, des communications, des contrôles ou d'autres fonctions logiques conséquents. Réf: 4404.
conducting composition (CC) An initiating composition that is to conduct electricity, used in electro-explosive devices. The explosive mixture is made conductive by intimately mixing with conducting material such as graphite or powdered metals. As the current flows, sufficient heat is generated to ignite the composition. [conducting composition electro-explosive device] Ref: 4560.	**composition conductrice (CC)** Composition d'initiation rendue conductrice de l'électricité, utilisée dans les dispositifs électro-pyrotechniques. (GTPS) La composition pyrotechnique est rendue conductrice par mélange intime à une matière conductrice telle que le graphite ou des particules métalliques. Le passage du courant produit un échauffement suffisant pour initier la composition. Dispositif électro-pyrotechnique à composition conductrice] Réf: 4560, GTPS.
conducting composition cap An electric primer wherein the conducting composition is initiated by the passage of electricity between the electrodes [conducting composition, electro-explosive device]. Ref: 4560.	**amorce à composition conductrice** Amorce électrique dans laquelle la composition conductrice est initiée par le passage du courant entre les électrodes . [composition conductrice, dispositif électro-pyrotechnique]. Réf: 4560.

confinement The characteristics of the casing of a charge, which restrict the expansion of the decomposition products when the explosive substance reacts and which the reactivity/sensitivity and/or performance of this charge. (GTPS) Confinement can be achieved by reducing the space available to the charge, incorporating internal or external packaging, strengthening the casing material, etc.	**confinement** Caractéristiques du logement d'une charge qui limitent l'expansion des produits de décomposition au cours de la réaction de la matière explosive et qui influencent la réactivité/sensibilité et/ou la performance de cette charge. (GTPS) Le confinement peut être réalisée par une diminution de l'espace libre, un bourrage intérieur ou extérieur, ou le renforcement de la résistance du matériau de l'enveloppe.
contact discharge A transfer of electrical charge between bodies of different electrostatic potential through direct contact. [electrostatic discharge, air discharge] Ref. 4235.	**décharge par contact direct** Transfert d'une charge électrostatique entre des corps de potentiels différents par contact direct. [décharge électrostatique, décharge aérien] Réf. 4235.
contact mine A mine detonated by physical contact. (AAP-6)	**mine à contact** Mine qui explose au contact. (AAP-6)
continuing current - *Lightning*: See STANAG 4236	**courant continu**- *Foudre*: Voir STANAG 4236.
controlled mine A mine which after laying can be controlled by the user, to the extent of making a mine safe or live, or to fire the mine. (AAP-6)	**mine contrôlée** Mine qui peut être commandée à distance après son mouillage. Le degré de contrôle consiste généralement à pouvoir rendre la mine insensible ou active ou à la faire exploser. (AAP-6)
conversion *Disposal*: The reclamation of the units or components of a munition for alternative military or non-military uses in the same, modified, or amended form. Ref: 4518.	**conversion** *Mise au rebut:* Récupération des sous-produits d'une munition pour un usage militaire ou non, sous une forme identique, modifiée ou corrigée. Réf: 4518.
cook off The premature ignition of an energetic material due to external heat. Example: Ignition of a propellant charge in a hot weapon chamber. Ref: 4240, 4382, 4433.	**explosion par échauffement** Initiation prématurée d'une matière énergétique due à un échauffement externe. Exemple : Allumage d'une charge propulsive dans une chambre d'une arme échauffée. [auto-inflammation*] Réf: 4240, 4382, 4433.
cook off -	**auto-inflammation** : Voir "explosion par échauffement"
corona – *Lightning:* See STANAGs 4236 and 4327.	**effet corona** - *Foudre*: Voir les STANAG 4236 et 4327.
countermine The process of exploding the main charge in a mine by shock of a nearby explosion of another mine or an independent explosive charge. See also AAP-6.	**contreminer** Le processus de faire exploser la charge principale d'une mine sous l'effet du choc provoqué par l'explosion d'une mine voisine ou d'une charge explosive. Voir aussi AAP-6.

cratering charge *Demolitions:* A charge placed at an adequate depth to produce a crater. (AAP-6) Ref: AOP-31.	**charge enterrée** *Destruction:* Charge placée à une profondeur convenable pour produire un cratère. (AAP-6) Réf: AOP-31.
credible environment: See "service environment" [environmental profile*, environment, life cycle]	**environnement crédible**: Voir "environnement propre au service". [profil d'environnement *, environnement, cycle de vie]
creeping mine *Sea mines*: A buoyant mine held below the surface by a weight, usually in the form of a chain, which is to creep along the seabed under the influence of stream or current. (AAP-6).	**mine rampante** *Mines navales*: Mine flottante, maintenue sous la surface par un lest (généralement une chaîne), et qui se déplace librement dans le courant. (AAP-6).
critical characteristic A characteristic (tolerance, surface finish, material, manufacture, assembly) of a product, materiel, or process which may result in the failure of a critical item in the event of non-fulfilment of requirement. (WAS) [safety critical]	**caractéristique critique** Caractéristique (tolérance, finition de surface, matériau, fabrication, assemblage) d'un produit, matériel ou processus, qui, dans le cas qu'il ne répond pas aux exigences, pourrait provoquer la défaillance d'un élément critique. [critique du point de vue de la sécurité]
critical detonation diameter Minimum diameter of a cylindrical explosive charge at which stable propagation of a stable detonation is ensured. This diameter is dependent on the confinement of the charge. (GTPS) The term in draft STANAG 4526 reads: "critical detonation failure diameter".	**diamètre critique pour la détonation** Diamètre d'une charge explosive cylindrique au-dessous duquel il n'y a plus propagation d'une détonation stable. Ce diamètre est lié au confinement de la charge. (GTPS) Réf: 4536.
critical item A part, assembly, installation, or production process with one or more characteristics which will cause an unacceptable degradation of performance or safety. [safety critical system]	**élément critique** Composant, assemblage, installation ou processus de fabrication comprenant une ou plusieurs propriétés qui conduira(ont) à une dégradation inacceptable de la performance ou de la sécurité. [système critique du point de vue de la sécurité]
cryogenic exposure *Disposal*: See STANAG 4518.	**cryofracture** *Mise au rebut:* Voir STANAG 4518.
cutting charge *Demolitions:* A charge which produces a cutting effect in line with its plane of symmetry. (AAP-6)	**charge découpante** *Destruction:* Charge produisant un effet de découpage dans son plan de symétrie. (AAP-6)
danger: See "hazard".	**danger** -
danger area *General :* A specified area above, below, or within which there may exist potential danger for personnel and/or equipment. (AAP-6). [unsafe area*, safe separation]	**zone dangereuse** (1) Zone spécifiée, à l'intérieur, au-dessus ou au-dessous de laquelle il peut y avoir un danger potentiel. (AAP-6) [séparation en sécurité]

deactivation *Fuzing systems*: To return an armed fuzing system to unarmed mode by the issue of a specific command or after a preset delay. The deactivated fuzing system is safe for use. Ref: 4187, 4497, AOP-31.	**désactivation** *Systèmes de fusée:* Remettre un système de fusée armé en mode non-armé par lancement d'une commande spécifique ou après un délai prédéterminé. Le système de fusée désactivé est en état de sécurité pour être utilisé. Réf: 4187, 4497, AOP-31.
deflagration Chemical explosion in which the zone of chemical reaction propagates through the initial medium at a subsonic velocity, mainly by thermal conduction. Extract of the GTPS definition. The term "deflagration" is sometimes used to describe a special type of explosive reaction and its effects on the environment.	**déflagration** Explosion chimique dans laquelle la zone de réaction se propage à une vitesse subsonique dans le milieu initial, principalement par conductibilité thermique. La définition de déflagration est un extrait de celle émise par le dictionnaire de pyrotechnie du GTPS. Le terme "déflagration" est parfois utilisé pour décrire un type de réaction explosive spécifique et ses effets sur l'environnement.
deflagration to detonation transition (DDT) The transition to detonation from an initial burning reaction. It is a complex process which generally requires the energetic material to have a high surface area and to be confined. [explosion-to-detonation transition, shock-to-detonation transition, critical detonation diameter.]	**transition de déflagration en détonation (TDD)** Transformation d'une réaction de déflagration en détonation. Ce processus complexe nécessite normalement que la matière énergétique occupe une grande surface de combustion et qu'elle soit confinée. [transformation d'explosion en détonation, transformation de choc en détonation, diamètre critique pour la détonation.]
degree of safety A measure of safety of a device or system expressed as a probability of the occurrence of a potentially hazardous event. According to system requirements the required degree of safety may be limited in duration or apply throughout the service life of a store. (OB)	**degré de sécurité** Sécurité d'un dispositif ou d'un système de fusée, exprimée en termes de probabilité d'occurrence d'un événement présentant un risque potentiel. Conformément aux besoins du système de fusée, le degré de sécurité peut être requis pendant une période limitée ou pendant toute la durée de vie du matériel. (OB)
delay element An intermediate item in an explosive train to lengthen the function time of the train.	**retard pyrotechnique** (1) Elément intermédiaire dans une chaîne pyrotechnique qui rallonge la durée de fonctionnement de la chaîne.
delayed detonation to detonation transition See "explosion-to-detonation transition".	**transition d'une réaction retardée ou inconnue en détonation**
demilitarization The act of removing or otherwise nullifying the military potential of a munition. Demilitarization is a necessary step for military items prior to their release into a non-military setting. Ref: 4518 and AOP-15. [disposal]	**démilitarisation** Action qui consiste à retirer ou à neutraliser le potentiel militaire d'une munition. La démilitarisation est une démarche nécessaire pour les articles militaires avant de permettre un emploi non militaire. Réf: 4518 et AOP-15. [mise au rebut]

demolition The destruction of structures, facilities or materiel by the use of fire, water, explosives, mechanical or other means. (AAP-6) Ref: 2818, AOP-31.	**destruction** Mise hors d'usage d'ouvrages, d'installations ou de matériel par l'emploi de moyens quelconques: feu, eau, explosifs, moyens mécaniques, etc. (AAP-6) Réf: 2818, AOP-31.
demolition accessory A part of a demolition system, being itself a supply item on its own. [demolition store] Ref: AOP-31.	**accessoire de destruction** Composant d'un système de destruction, étant lui-même un article approvisionné séparément. [engin de destruction] Réf: AOP-31.
demolition charge An explosive charge designed to destroy materiel, structures or installations, by means of explosive effects such as blast, fragmentation, perforation or cutting. Charge: In combat engineering, a quantity of explosive materials, prepared for demolition purposes. Definition derived from AAP-6. Alternative definition in AASTP-3. Ref : AOP-31, AAP-19.)	**charge de destruction** Charge explosive conçue pour détruire du matériel, des ouvrages ou des installations, par des effets explosifs, tels que: onde de choc, fragmentation, perforation, coupure. Charge: En génie de combat, quantité d'explosifs préparée à des fins de destruction. Définition dérivée de l'AAP-6. Définition alternative dans l'AASTP-3. (AOP-31, AAP-19).
demolition materiel Any materiel necessary to carry out a demolition. This covers demolitions systems as a whole, - subsystems, - stores and - accessories. Ref: 2818, AOP-31.	**matériel de destruction** Tout matériel nécessaire pour exécuter une destruction. Ceci couvre les ensembles de systèmes de destruction, les sous-systèmes, les équipements ainsi que les accessoires de destruction. Réf: 2818, AOP-31.
demolition store An explosive part of a demolition system being a supply item on its own. [demolition charge, non-explosive demolition accessory] Ref: AOP-31.	**accessoire de destruction explosif** Composant explosif d'un système de destruction étant un article d'approvisionnement tel quel. [charge de destruction, accessoire de destruction non-explosif] Réf: AOP-31.
demolition sub-system A device or a series of connected demolition stores and demolition accessories, designed to perform one or more specific functions within a demolition system. Ref: AOP-31.	**sous-système de destruction** Dispositif ou série d'équipements et d'accessoires de destruction, conçu pour produire une ou plusieurs fonctions dans un système de destruction. Réf: AOP-31.
demolition system A device or series of connected devices containing the explosive and non-explosive materials necessary to meet a demolition requirement. Ref: AOP-31.	**système de destruction** Dispositif ou séries de dispositifs connectées entre eux contenant les matières nécessaires pour satisfaire à une demande de destruction. Réf: AOP-31.
dependability Characteristic of the system combining reliability, availability, maintainability and safety (RAMS). Global activity grouping the four RAMS activities.	**sûreté de fonctionnement** Caractéristique du système regroupant la fiabilité, la disponibilité, la maintenabilité et la sécurité. Activité englobant l'ensemble de ces activités.

deployment *Weapon systems, munitions:* The actions that are required to prepare a weapon system for use. The AAP-6 definition concerns moving of military units. [availability, operational environment]	**déploiement** *Systèmes d'arme, munitions:* Action(s) requise(s) pour préparer un système d'armes à l'emploi. La définition de l'AAP-6 concerne les déplacements d'unités militaires. [disponibilité, environnement opérationnel]
deployment configuration The condition of materiel when prepared for operational use. This is physical arrangement of the materiel during its tactical lay-out. For munitions this usually implies: unarmed, unpackaged, or in tactical sub-package.	**configuration de déploiement** Condition prévue d'un matériel pour l'utilisation opérationnelle. Ceci est l'arrangement physique du matériel dans son déploie-ment tactique. Pour les munitions ceci implique normalement: non-armé, hors emballage ou en sous-emballage tactique.
design pressure (DP) See "mortar design pressure curve".	**pression nominale** Voir "courbe de pression nominale pour mortier".
design principles The fundamental rules to be adhered to in the process of recognition and problem solving associated with the creation of a product.	**principes de conception** Règles générales à appliquer au cours des phases d'analyse du besoin et d'élaboration des solutions techniques, lors du développement d'un produit.
design safety guides Concepts, logic, background, examples, statements of good practices or rules, time proven concepts of features, any of which should be considered by the designer during his efforts to obtain optimum safety design.	**directives de sécurité pour la conception** Ensemble de concepts, éléments logiques, antécédents, méthodes d'emploi, exemples, instructions et règles pratiques, principes ou caractéristiques éprouvés, à prendre en compte par le concepteur dans sa recherche d'une sécurité optimale.
designed safety state A system state that provides the maximum degree of safety within the constraints of the administrative, operational or logistic phase. Ref : 4404.	**état de sécurité nominal** État du système qui procure le niveau maximal de sécurité dans les contraintes de la phase opérationnelle ou logistique en cours. Réf : 4404.
destruction : See "demolition", "disposal".	**destruction** : Voir "mise au rebut ".
detonating cord A flexible waterproof tube containing a high explosive designed to transmit the detonation wave. (AAP-6) [shock tube] Detonating cord is used in demolition firing systems and in fuzing systems. Ref: 4363, AOP-31.	**cordeau détonant** Cordeau d'explosif contenu dans une gaine souple et étanche, et servant à transmettre la détonation. (AAP-6) [tube choc] Le cordeau détonant est utilisé dans des systèmes de mise de feu pour systèmes de destruction et dans des systèmes de fusée. Réf: 4363, AOP-31.

detonation Decomposition reaction in which the zone of chemical reaction propagates through the initial medium at a supersonic velocity behind a shock front. The term "detonation" is sometimes used to describe a special type of explosive reaction and its effects on the environment.	**détonation** Réaction de décomposition dans laquelle la zone de réaction chimique se propage à une vitesse supersonique dans le milieu initial par l'intermédiaire d'une onde de choc. (GTPS) . Le terme "détonation" est parfois utilisé pour décrire un type de réaction explosive spécifique et ses effets sur l'environnement. La définition de détonation est un extrait de celle émise par le dictionnaire de pyrotechnie du GTPS)
detonation relay system In a firing system of a deployed demolition system, the explosive train conducting the detonation from the initiator to the main demolition charges. [firing circuit, firing stimulus relay system] Ref: 4363, AOP-31.	**système de relais de détonation** Dans un système de mise de feu d'un système de destruction déployé, chaîne explosive qui conduit la détonation de l'initiateur vers les charges de destruction principales. [circuit de mise de feu, système de relais de stimulus de mise à feu] Réf: 4363, AOP-31.
detonator A component containing at least one high explosive which upon receipt of a specified stimulus (mechanical, electrical, pyrotechnic or other) will produce an output (shock wave and / or fragments) which is used to initiate a high explosive charge or other high explosive. Alternative definitions in AAP-6, AAP-19, AASTP-3 and MIL-STD-444. [US: Blasting cap*]. Ref: 4363, AOP-31.	**amorce-détonateur** Composant contenant au moins un explosif, qui après réception d'un stimulus spécifié (sous forme mécanique, électrique, pyrotechnique ou autre) produira un effet de sortie (sous forme d'onde de choc et / ou de fragments) qui est utilisé pour initier une charge explosive ou un autre composant pyrotechnique. Définitions alternatives dans l'AAP-6, l'AAP-19, l'AASTP-3 et MIL-STD-444. Réf: 4363, AOP-31.
detonator -	**détonateur**: Voir "amorce détonateur".
deviation: See AQAP-119.	**déviation**: Voir l'AQAP-119.
differential voltage *Lightning tests*: In a two-way circuit, the voltage difference between the wires. Ref: 4327.	**tension de mode différentiel** *Essais foudre*: Dans un circuit à deux conducteurs, la différence de potentiel entre les conducteurs. Réf: 4327.
diffusion flux *Lightning*: See STANAGs 4236 and 4327.	**flux de diffusion** *Foudre:* Voir les STANAG 4236 et 4327.
dip needle circuit *Sea mines :* A mechanism which responds to a change in the magnitude of the vertical component of the total magnetic field. (AAP/6)	**mise de feu à aiguille aimantée** *Mines navales:* : Mise de feu répondant aux variations d'intensité de la composante verticale du champ magnétique total. (AAP/6)
direct action fuze: See "impact action fuze".	**fusée percutante** -
direct strike - *Lightning*: See STANAG 4236.	**coup direct** - *Foudre:* Voir STANAG 4236.
disarm *Fuzing systems:* To restore a fuzing system to a non-armed condition from an armed condition, either reversibly, to permit rearming, or irreversibly and permanently (sterilization). [arm, armed, unarmed, deactivation, sterilization] Ref: 4187, AOP-31.	**désarmement** *Systèmes de fusée:* Rétablissement d'un système de fusée de l'état armé en l'état non-armé, soit réversiblement pour permettre le réarmement soit de façon irréversible et permanente (stérilisation).. [armer, armé, non armé, désactivation, stérilisation] Réf: 4187, AOP-31.

discriminating circuit *Sea mines:* That part of the operating circuit of a sea mine which distinguishes between the response of the detecting circuit to the passage of a ship and the response to other disturbances (e.g., influence sweep, countermining, etc.) (AAP/6)	**circuit d'analyse** *Mines navales*: Partie d'un circuit de mise de feu qui fait la distinction entre la réponse du détecteur à une cible et la réponse à d'autres perturbations (par exemple dragues à influence, contre-minage, etc.). (AAP/6)
disposal The end-of-life tasks and actions for residual materials resulting from demilitarization operations. Disposal encompasses the process of redistributing, transferring, donating, selling, abandoning, or destroying military munitions. The Explosive Ordnance Disposal (EOD) activities are not included in this definition. [demilitarization, destruction] Ref: 4518.	**mise au rebut** Tâches et actions, à la fin du cycle de vie, concernant les matériaux résiduels provenant des opérations de démilitarisation. La mise au rebut comprend les processus de redistribution, transfert, don, vente, abandon ou destruction de munitions. Les activités de l'enlèvement et destruction des explosifs (EOD) ne sont pas visées dans cette définition. [élimination*, démilitarisation, destruction] Réf: 4518.
distant flash A lightning discharge which occurs at such a distance that the only coupling to the materiel is by electromagnetic radiation. [far field flash*] Ref: 4236.	**éclair lointain** Décharge produite à une distance telle que le couplage avec le matériel s'effectue uniformément par rayonnement électromagnétique. Réf: 4236.
dormant *Mines:* The state of a mine during which a time delay feature in a mine prevents it from being actuated. (AAP/6) [intermittent arming device]	**insensible** *Mines*: État d'une mine qui ne peut être influencée du fait d'un dispositif de réceptivité différée. (AAP/6) [dispositif de réceptivité différée]
drifting mine A buoyant or neutrally buoyant mine free to move under the influence of waves, wind, current or tide. (AAP/6)	**mine dérivante** Mine flottante ou de flottabilité nulle pouvant se déplacer librement sous l'effort des vagues, du vent, des courants ou des marées. (AAP/6)
drop The deliberate or accidental release of a suspended or supported body, either with or without some degree of imposed restraint during the ensuing fall. [fall*, free fall, impact, shock] Réf: 4375, 2914; AECP-1.	**chute** Relâchement délibéré ou accidentel d'un corps suspendu ou retenu, celui-ci pouvant éventuellement être freiné après avoir été lâché. [chute libre, impact , choc] Réf: 4375, 2914; AECP-1.
drop height The shortest vertical distance between the test item and the impact surface. Ref: 4375, 2914; AECP-1.	**hauteur de chute** Distance verticale minimale entre le spécimen d'essai et la surface d'impact. Réf: 4375, 2914; AECP-1.
dud Warhead, projectile or explosive main charge which, after firing, has not been armed as foreseen, or which did not explode after arming. The definition of AAP-6 concerns demolition materiel. [blind*, misfire]	**raté** (1) Défaut de mise à feu ou d'explosion. 1. Le terme "raté" couvre "dud" et "misfire". 2. La définition dans l'AAP-6 concerne le matériel de destruction. 3. Voir aussi "misfire / raté". (2).

durability The ability to continue to perform satisfactorily for a long time. [reliability]	**durarabilité** Aptitude de continuer d'accomplir les fonctions pendant une période prolongée. [fiabilité]
early burst A malfunction in which the munition functions after the arming delay but before sensing the designed functional stimulus from either target or command. For proximity fuzes, following safe separation, an explosion prior to the design height of burst environment is considered to be an early burst. [premature] Ref: 4187.	**éclatement prématuré** Défaut de fonctionnement qui fait que la munition fonctionne après le retard d'armement mais avant de capter le signal fonctionnel prévu provenant de l'objectif ou du commandement. Dans le cas des fusées de proximité, une fois atteinte la distance de sécurité, on considère qu'il y a éclatement prématuré lorsque l'explosion se produit avant que le projectile arrive dans la plage des hauteurs nominales d'éclatement. [prématuré] Réf: 4187.
effectiveness on target The intended operational terminal effect of a munition, e.g., target destructive capacity, illumination power, screening effect, disturbing capability, stopping power, usually stated in quantitative terms. [performance*, terminal ballistics*, acceptable performance]	**efficacité sur la cible** L'effet terminal d'une munition, dans les conditions opérationnelles prévues, par exemple capacité de destruction d'une cible, puissance éclairante, masquage, diminution de la capacité offensive, généralement exprimé en termes quantitatifs. [performance*, balistique terminale *, performance acceptable]
electric ignition The activation of an initiator in a pyrotechnic train by direct application of electrical energy. [electric initiation] Ref: 4368, 4560.	**allumage électrique** Activation de l'allumeur de la chaîne d'allumage par l'application directe d'énergie électrique. [amorçage ou initiation électrique] Réf: 4368, 4560.
electric initiation The activation of an initiator in an explosive train by direct application of electrical energy. [electric ignition] Ref: 4560.	**amorçage électrique** Activation de l'initiateur de la chaîne pyrotechnique par l'application directe d'énergie électrique. [allumage électrique, initiation électrique] Réf: 4560.
electrically representative material (ERM) *(N)EMP testing*: A material of which the real part (R) and imaginary part (X) of its radio frequency impedance (R+jX) in the frequency band 1 kHz-100 MHz are similar to those of the original material which has to be simulated. Ref: 4416.	**matériau électriquement représentatif** *Essais IEM(N)*: Matériau pour lequel les parties réelles (R) et imaginaire (X) de son impédance électromagnétique (R + jX) dans la bande 1 kHz - 100 MHz, sont analogues à celles du matériau originel qui est simulé. Réf: 4416.
electrochemical reduction *Disposal*: Treatment of organic wastes by generation of highly oxidizing species in an electrochemical cell and utilizing these to oxidize the waste to carbon dioxide and water. Ref: 4518.	**réduction électrochimique** *Mise au rebut*: Traitement de déchets organiques dans une cellule électrochimique par génération de produits fortement oxydants. Ceux-ci transforment les déchets en dioxyde de carbone et eau. Réf: 4518.

electro-explosive device (EED) A one shot explosive or pyrotechnic device used as the initiating element in an explosive or mechanical train and which is activated by the application of electrical energy. [electro-explosive device firing system] Alternative definitions in AAP-6 and AASTP-3. Ref: 4234, 4324, 4560, AOP-31.	**dispositif électro-pyrotechnique (DEP)** Dispositif monocoup, utilisé comme élément d'amorçage dans une chaîne pyrotechnique ou mécanique et qui est activé par l'apport d'énergie électrique. [dispositif électro-explosif*, système de mise de feu par dispositif électro-explosif] Définitions alternatives dans l'AAP-6 et l'AASTP-3. Réf: 4234, 4324, 4560, AOP-31.
electromagnetic pulse (EMP): See STANAG 3968 and AECTP-500.	**impulsion électromagnétique**: Voir STANAG 3968 et AECTP-500.
electromagnetic radiation environment (EMRE) The intensity, frequency and time distribution of the rf radiation in the range 200 kHz to 40 GHz existing at a location. Ref: 4234.	**environnement de radiations électromagnétiques** Intensité, fréquence et distribution temporelle de rayonnement électromagnétique dans la gamme de 200 kHz à 40 GHz, qui existent à un endroit donné. Réf: 4234.
electrostatic charge level *Service environment:* The electrostatic charge acquired by personnel or materiel involved in NATO operations. The electrostatic charge, Q, measured in Coulomb, is the product of C: the capacitance of the individual or material and V: the voltage: Q = CV. The energy stored, $J= ½C·V^2$. Ref: 4235.	**niveau de charge électrostatique** *Environnement propre au service:* Charge électrostatique acquise par le personnel ou le matériel engagé dans des opérations OTAN. Cette charge Q (Coulomb) est égale à CV, C étant la capacité de la personne ou du matériel et V la tension acquise. L'énergie accumulée, J (Joule), est égale à $½C·V^2$. Réf: 4235.
electrostatic discharge (ESD) A transfer of electrostatic charge between bodies of different electrostatic potentials through the air (air discharge) or through direct contact (contact discharge).	**décharge électrostatique** Transfert de la charge électrostatique entre des corps de potentiels électrostatiques différents dans l'air (décharge aérien) ou à la suite d'un contact direct (décharge par contact direct).
embedded software Software fixed in the computer in the "Read Only" memory (ROM) Ref: 4187.	**logiciel intégré en mémoire morte** Logiciel implanté dans la mémoire morte (ROM) d'un ordinateur. Réf: 4187.
enable *Fuzing systems:* To remove or deactivate the safety features which prevent arming, thus permitting arming to occur subsequently. [deactivation, armed, disarm, unarmed, unsafe state] Ref: 4187, 4497, AOP-20, AOP-31.	**effacer les sécurités** *Systèmes de fusée :* Retirer ou désactiver les dispositifs de sécurité qui empêchent l'armement, ce qui permet par conséquent l'armement ultérieur. [mise en état de service*, désactivation, armé, désarmement, non armé, état dangereux] Réf : 4187, 4497, AOP-20, AOP-31.
end-of-life The period of time from when a munition is no longer suitable or no longer required for military use to when demilitarization and disposal activities have been completed. [disposal, demilitarization reuse] Ref: 4518.	**fin de vie de service** Période pendant laquelle une munition n'est plus apte au service et plus nécessaire pour l'utilisation militaire, jusqu'`a l'achèvement de sa démilitarisation ou sa mise au rebut. [mise au rebut, démilitarisation, réutilisation] Réf: 4518.

energetic material A substance or mixture of substances, which by chemical reaction, is capable of rapidly releasing energy. [explosive material]	**matière énergétique** Matière ou mélange de matières capable de dégager rapidement de l'énergie. [matière explosive]
environment 1. *Source of influences on materiel (donor aspect.*: The total set of all external natural and induced conditions to which a materiel is exposed at a given moment, during a specified period of time. The descriptions of the environments of an item are based on its life cycle. An environmental profile is a synthesis of all environments belonging to a given life cycle. [environmental profile, life cycle, service environment] Ref: AOP-15 and many other AC/310 documents, AECTP-100, AECTP-200. 2. *The surroundings of a source (acceptor aspect)*: Anything and anybody present in the neighbourhood of a source likely to undergo its influences. Ref: 4518.	**environnement** 1. *Source d'influences sur un matériel (aspect donneur.*: Ensemble de toutes les conditions physiques et chimiques auxquelles un matériel est exposé à un moment ou pendant une période de temps spécifié. Les descriptions des environnements d'un article sont basées sur son cycle de vie. Un profil d'environnement est une synthèse de tous les environnements qui appartiennent à un cycle de vie donné. [cycle de vie, environnement de service] Réf: AOP-15 et plusieurs autres documents AC/310, AECTP-100, AECTP-200. 2. *Les environs d'une source (aspect récepteur)*: Toute chose, matière ou personne susceptible de subir les influences de la source. Réf: 4518.
environmental force A specific stimulus obtained from the environment. (OB) Environmental forces are the elements of an environmental profile. [environmental factor*, forcing function*, constraint*]	**force d'environnement** Excitation spécifique reçue de l'environnement. Les forces d'environnement sont les éléments du profil d'environnement. [force ambiante*, facteur d'environnement*, contrainte*]
environmental profile A synthesis of all external conditions, whether natural or induced, to which items or materiel are expected to be subjected during a specified period of time or handling: the complete life cycle, storage life, operational life, one or a specified number of missions, disassembly, disposal, etc. [credible environment*, which includes explicitly extreme events to be considered for MURAT testing following STANAG 4439, life cycle, service environment, service life] 1. The effects of the environmental conditions are physical, chemical, electromagnetic, electrostatic and nuclear effects, whether natural or induced, to which a munition is likely to be subjected throughout its service life (AOP-15, AECTP-200). 2. Environmental forces are the elements of an environmental profile.	**profil d'environnement** Synthèse de tous les facteurs extérieurs, d'origine naturelle ou artificielle, dont les articles ou matériels sont prévus d'être soumis pendant une période spécifiée ou une manipulation: tout le cycle de vie, durée de vie en service, durée de vie de stockage, durée de vie opérationnelle, une mission ou un nombre spécifié de missions, démontage, destruction, etc. [environnement crédible*, qui inclut explicitement les événements extrêmes à considérer pour les essais de muratisation suivant STANAG 4439, cycle de vie, environnement de service, durée de vie en service] 1. Les conditions d'environnement occasionnent des effets physiques, chimiques, électromagnétiques, électrostatiques et nucléaires, des effets naturels ou induits que la munition subit durant sa durée de vie (AOP-15, AECTP-200). 2. Les forces d'environnement sont les éléments d'un profil d'environnement.

environmental requirement A detailed specification of the environmental conditions for which a materiel is required to be and remain safe and suitable for service during its life cycle. The environmental requirements for munitions safety are usually more extensive and at more severe levels than for munitions reliability. Ref. AOP-15, AECTP-100.	**exigence du point de vue de l'environnement** Spécification détaillée des conditions de l'environnement dans lesquelles un matériel doit être et rester en sécurité et apte au service durant tout son cycle de vie. Les exigences par rapport à l'environnement sont habituellement plus étendues et les niveaux plus sévères que par rapport à la fiabilité. Réf. AOP-15, AECTP-100.
environmental sensor: See "sensor".	**détecteur d'environnement**: Voir "capteur".
environmental test equipment: See AECTP-100.	**équipement d'essais d'environnement**: Voir AECTP-100.
equipment transient test level (ETTL) *Lightning tests:* See STANAG 4327.	**niveau d'essais transitoires pour une arme** *Essais foudre:* Voir STANAG 4237.
evaluation : See "assessment".	**évaluation** -
event tree: See "event tree analysis".	**arbre d'événements** : Voir "analyse d') arbre d'événements".
event tree analysis Tree procedure related to a given failure (recognized), used to analyse the consequences of this failure on the system, to determine whether the final states obtained contain one or more feared potential events.	**analyse d'arbre d'événements** Démarche arborescente qui, à partir d'une défaillance donnée (retenue), se propose d'analyser ses conséquences à travers le système pour rechercher si les états finaux obtenus contiennent un ou plusieurs événements redoutés.
exercise mine *Sea mines:* A mine suitable for use in mine warfare exercises, fitted with visible or audible indicating devices to show where and when it would normally fire. (AAP-6) [practice mine]	**mine d'exercice** *Mines navales:* Mine utilisée lors des exercices de guerre des mines, comportant un dispositif audible ou visuel indiquant le lieu et l'instant où elle exploserait. (AAP-6) [mine d'instruction]
exploder 1. Equipment used to initiate firing. 2. A device assigned to generate an electric current in a firing circuit after deliberate action by the user in order to initiate an explosive charge or charges. (AAP-6) [blasting machine* - US, MIL-STD-444]	**exploseur** 1. Équipement utilisé pour initier la mise à feu. (GTPS) 2. Appareil destiné à provoquer un courant électrique dans un circuit de mise de feu, sous action volontaire de l'utilisateur afin d'actionner une ou plusieurs charges. (AAP-6) [(2): explodeur, équipement de mise de feu*]
exploding bridge wire (EBW) initiator An electro-explosive device which, when subject to high energy, short duration electrical pulse, heats up very rapidly, partially sublimes and then explodes, projecting high energy particles, causing a detonation in a relatively insensitive explosive which is in direct contact with the bridge wire. [electro-explosive device] Ref: 4560.	**dispositif électro-pyrotechnique à fil explosé** Dispositif électro-pyrotechnique qui, étant soumis à une impulsion électrique de courte durée et à énergie élevée, subit un échauffement très rapide avec une sublimation partielle suivie d'une expansion avec projection de particules de grande énergie, provoquant la détonation d'une matière explosive relativement peu sensible placée en contact direct avec le filament. [dispositif électro-pyrotechnique] Réf: 4560.

exploding foil initiator (EFI) An electro-explosive device with a low resistance bridge which, when subjected to a high energy, short duration, electrical pulse, converts electrical energy into kinetic energy to project a high velocity flyer plate which, on impact, causes a detonation in a relatively insensitive explosive material which is not in direct contact with the bridge. Remark : When used as the initiator in a fuze with non-interrupted explosive train, the explosive shall be approved for in line use. [slapper detonator*] Ref: 4560.	**dispositif électro-pyrotechnique à élément projeté** Dispositif électro-pyrotechnique muni d'un pont à faible résistance qui, après avoir reçu une brève impulsion de forte énergie, convertit l'énergie électrique en énergie cinétique destinée à projeter une paillette à grande vitesse qui, à l'impact, provoque la détonation d'une matière explosive relativement insensible et qui n'est pas en contact direct avec le pont. Observation : En cas d'utilisation comme initiateur dans une chaîne pyrotechnique non interrompue dans une fusée, la matière explosive doit être approuvée pour une utilisation en ligne. [détonateur "slapper"*, détonateur à percussion] Réf: 4560.
explosion A nuclear, chemical or physical process leading to the sudden release of energy. The term "explosion" is sometimes used to describe a special type of explosive reaction and its effects on the environment. [detonation, deflagration]	**explosion** Processus nucléaire, chimique ou physique conduisant à la libération brutale d'énergie. Le terme "explosion" est parfois utilisé pour décrire un type de réaction explosive spécifique et ses effets sur l'environnement. [détonation, déflagration]
explosion-to-detonation transition (XDT) A delayed transition of a unstable violent reaction into detonation. [delayed detonation to detonation transition*, deflagration-to-detonation transition, shock-to-detonation transition]	**transition d'une réaction retardée ou inconnue en détonation (TXD)** Transition retardée d'une réaction violente non stable vers la détonation. [transition de déflagration en détonation, transition de choc en détonation]
explosive: See "explosive material".	**matière explosive** -
explosive aerosol: See "fuel-air explosive".	**aérosol explosif**: Voir "explosif combustible-air".
explosive component A discrete item in a munition that contains energetic material. Ref: 4363.	**composant pyrotechnique** Composant particulier dans une munition, qui contient une matière énergétique. Réf: 4363.
explosive material A substance (or a mixture of substances) which is capable by chemical reaction of producing gas at such a temperature and pressure as to cause damage to the surroundings. Included are pyrotechnic substances even when they do not evolve gases. The term "explosive" thus includes all solid and liquid materials variously known as high explosives and propellants, together with igniter, primer, initiatory and pyrotechnic (e.g., illuminants, smoke, delay, decoy, flare and incendiary) compositions. STANAG 4170 refers only to those explosive materials whose application requires that they shall react reliably on demand. [energetic material, fuel-air explosive] Ref: 4170, AOP-7, AOP-26, 4397,	**matière explosive** Matière (ou mélange de matières) qui peut par réaction chimique dégager des gaz à une tempé-rature et une pression susceptibles de provoquer des dommages aux alentours. Ceci s'applique aussi aux matières pyrotechniques même lorsqu'elles ne dégagent pas de gaz. Ainsi le terme "matière explosive" englobe ainsi toutes les matières solides et liquides qui reçoivent les appellations diverses d'explosifs et de propergols, de même que les compositions pyrotechniques (par exemple d'initiation, d'allumage, éclairantes, fumigènes, retardatrices, leurrantes, de signalisation et incendiaires). STANAG 4170 concerne seulement aux matières explosives dont l'emploi exige une réaction fiable à la demande. [matière énergétique, explosif combustible - air] Réf: 4170, AOP-7, AOP-26, 4397.

explosive ordnance disposal (EOD) The detection, identification, field evaluation, rendering safe, recovery and final disposal of unexploded explosive ordnance. See AAP-6 for a more extended definition. [disposal]	**enlèvement et destruction des explosifs** Ensemble des opérations comprenant la détection, l'identification, l'appréciation sur le terrain, la mise hors d'état de fonctionner, l'enlèvement et finalement la destruction définitive des munitions non explosées. Voir l'AAP-6 pour une définition plus élaborée. [neutralisation des munitions explosives*, mise au rebut]
explosive slurry *Demolition materiel*: Suspension of an explosive mixture in water or other liquid. Ref: AOP-31.	**bouillie explosive** *Matériel de destruction*: Solution aqueuse d'un mélange explosif de matières énergétiques. Réf: AOP-31.
explosive train 1. The detonation or deflagration transfer mechanism (i.e., train) beginning with the first explosive element (e.g., primer, detonator) and terminating in the main charge. 2. A set of functionally linked explosive components which receive, from the surroundings, a non-explosive input of energy, which provide the transmission of explosive phenomena and which produces as output one or several non-explosive effects (light, noise, shock waves, etc). (GTPS) The input energy may be: electrical, mechanical, photonic, heat, etc. The explosive phenomena are: combustion, deflagration, detonation. Their induced effects are: temperature, pressure, and shock. The output effects are: mechanical, thermal, photonic, etc. [pyrotechnic train] Ref: 4363, AOP-20, AOP-21, AOP-31.	**chaîne pyrotechnique** 1. Chaîne de détonation ou de déflagration (c'est-à-dire le dispositif matériel de transmission), commençant avec le premier élément explosif (ex. l'amorce, le détonateur) et se terminant par la charge principale. 2. Ensemble de composants pyrotechniques liés fonctionnellement recevant, du milieu extérieur, une énergie d'entrée non pyrotechnique, assurant la circulation de phénomènes pyrotechniques et produisant en sortie un ou plusieurs effets non pyrotechniques (lueur, bruit, onde de choc, ...) (GTPS) L'énergie d'entrée peut être: électrique, mécanique, photonique, thermique, etc. Les phénomènes pyrotechniques sont: la combustion, la déflagration, la détonation, et leurs effets induits: une température, une pression, un choc. Les effets de sortie sont: mécaniques, thermiques, photoniques, etc. [chaîne d'allumage] Réf: 4363, AOP-20, AOP-21, AOP-31.
explosiveness A measure of the explosive response to a given stimulus in a defined system. It is dependent not only on the explosive, but also on the mass, physical state, configuration and confinement. [sensitiveness, performance]	**explosivité** Mesure de la réponse explosive à un stimulus donné dans un système défini. Elle dépend non seulement de la matière explosive mais aussi de sa masse, son état physique, sa configuration et son confinement. [sensibilité, performance]
extreme service conditions pressure (ESCP) *Cannon systems*: The chamber pressure developed when firing the specified system under extreme service conditions. (4110) The method of calculation is explained in STANAG 4110.	**pression dans les conditions d'utilisation extrêmes (PCUE)** *Systèmes de canon*: La pression de chambre développée au cours du tir du système spécifié dans les conditions d'utilisation extrêmes. (4110) La méthode de calcul est expliquée dans STANAG 4110.

extreme service environment The most detrimental environmental conditions in which the materiel is expected to be and remain safe and serviceable. Examples are : Blaze, or battlefield conditions such as fragment impact, nearby detonations, etc. Ref: 4439, AOP-39.	**environnement extrême propre au service** Conditions d'environnement les plus nuisibles dans lesquelles le matériel est attendue d'être et de rester en état de sécurité et d'aptitude au service. Exemples : Incendie, conditions de combat telles que impact de fragments, détonation en proximité, etc. Réf : 4439, AOP-39.
fail-safe 1. *General:* Characteristic which prevents faults from becoming critical faults. A fail-safe design is one which ensures the system is put into a safe condition if a fault occurs. (HSystSäke) 2. *Fuzing systems:* A design feature of a fuzing system which renders the munition incapable of arming and functioning upon malfunction of safety feature(s) or exposure to out of sequence arming stimuli or operation of components. Ref: 4187, AOP-31, MIL-STD 882.	**sécurité positive** 1. *En général:* Caractéristique qui empêche un défaut de devenir un défaut critique. Une conception de sécurité positive en est une qui assure que le système est mis en état de sécurité si un défaut a lieu. 2. *Systèmes de fusée:* caractéristique de la définition d'un système de fusée qui rend l'armement ou le fonctionnement impossible suite au dysfonctionnement d'un dispositif de sécurité, ou, en dehors de la séquence d'armement, à une exposition à des stimuli ou au fonctionnmeent de composants. Réf: 4187, AOP31, MIL-STD 882.
failure (1) The event in which any item or part of an item does not perform as specified, or its safety or reliability is compromised. [reversible failure, irreversible failure, fault] Ref: ARMP-1.	**défaillance** Evénement au cours duquel un article ou une pièce de cet article ne fournit pas les performances spécifiées, ou sa sécurité ou sa fiabilité est compromise. [défaillance réversible, défaillance irréversible, défaut] Réf: ARMP-1.
failure (2). See "misfire".	**raté** (2)
failure cause The conditions giving rise to a failure, such as the circumstances during design, manufacture, assembly, installation, or use that have lead to the failure. Examples are: probable personnel error, environmental force, ageing, design characteristics, procedural deficiencies, or subsystem or component failure or malfunction, or combinations thereof. Ref: ARMP-1.	**cause de défaillance** Les conditions qui donnent lieu à une défaillance, telles que les circonstances pendant la conception, la fabrication, l'installation ou l'utilisation qui ont emmenées une défaillance. Exemples: une erreur humaine probable, une force d'environnement, le vieillissement, les caractéristiques de la conception, les fautes de procédure, ou défaillance ou un dysfonctionnement d'un sous-système ou d'un composant ou des combinaisons de ces éléments. Réf : ARMP-1.
failure mode The characteristics of a fault which causes a system failure.	**mode de défaillance** Les caractéristiques d'une défaillance qui provoque une défaillance du système.
failure mode, effects (and criticality) analysis (FMEA, FMECA) Analytic procedure to evaluate the effects, (probability and criticality) of failure modes.	**analyse des modes de défaillance, de leurs effets (AMDE) et de leur criticité (AMDEC)** Procédure analytique pour l'évaluation des effets, (la probabilité et la criticité) des modes de défaillance.

failure probability The probability a system will fail during a specified time period or on demand.	**probabilité de défaillance** La probabilité qu'un système faillit (tombera en panne) pendant une période de temps spécifiée ou au moment d'une demande.
failure tolerance Aptitude of a product or system, following a failure: - to continue the mission (fail operational) - to achieve a safety state (fail safe).	**tolérance aux pannes** Aptitude d'un produit ou système, à permettre après une défaillance: - la continuation de la mission (défaillance opérationnelle) ou - l'obtention d'un état de sécurité (sécurité positive)
family of nose fuzes Fuzes that are interchangeable with the same projectile, e.g., point detonating, mechanical-time, proximity. For acronyms, see STANAG 2916.	**famille de fusées d'ogive** Fusées interchangeables avec le même projectile, par exemple fusée percutante, fusée mécanique à temps, fusée de proximité. Pour les acronymes, voir STANAG 2916.
far field A region at a distance from the emitter within which the electromagnetic radiation consists of electric and magnetic fields which bear a constant relationship to one another and the power density decreases as the square of the distance from the emitter. [Fraunhofer region*, near field] Ref: 4234.	**champ lointain** Région éloignée de l'émetteur dans laquelle les composantes électriques et magnétiques du champ présentent un rapport constant et la densité de puissance décroît comme le carré de la distance à l'émetteur. [zone de Fraunhofer*, champ proche] Réf: 4234.
far field flash: See "distant flash".	**éclair lointain** -
far field strike: See STANAG 4236.	**coup de foudre lointain**: Voir STANAG 4236
fast heating: See STANAG 4240 [cook-off, slow heating]	**échauffement rapide**: Voir STANAG 4240. [explosion par échauffement, échauffement lent]
fault: See "failure".	**défaillance** -
fault tree analysis (FTA) A method of analysing the logical combinations of various system states (basic events) which lead to the particular failure outcome (top event).	**analyse d'arbre de défaillance** Méthode pour analyser les combinaisons logiques de différents états du système (événements deb ase) qui mènent à une défaillance particulière (événements de crête).
field impedance: See STANAG 4324	**impédance d'onde**: Voir STANAG 4324
field strength The magnitude of an electric or magnetic field associated with the electromagnetic radiation expressed in volts / metre ($V \cdot m^{-1}$). Ref: 4234.	**amplitude du champ** Intensité du champ électrique ou magnétique qui, associée au rayonnement électromagnétique, s'exprime en Volt / mètre ($V \cdot m^{-1}$). Réf: 4234.

film bridge initiator An electro-explosive device where the power dissipated by the passage of current through a resistive vacuum deposited film or foil of very small dimensions is used to initiate by heating a primary explosive which is in intimate contact with the film or foil. [electro-explosive device] Ref: 4560.	**dispositif électro-pyrotechnique à feuille chaude** Dispositif électro-pyrotechnique dans lequel la puissance dissipée par le passage d'un courant électrique au travers d'un film résistif de très petites dimensions, déposé sous vide, sert à initier par chaleur une matière explosive primaire qui est en contact étroit avec le film. [dispositif électro-pyrotechnique] Réf: 4560.
final (or type) qualification *Explosive materials:* Final qualification relates to the use of the explosive material in a specific application or munition. Final qualification is given when the explosive has been assessed as part of the design of the specific munition, and predicted to be safe and suitable for military operational or training use in that role. The database of results is a means of undertaking "Risk Assessment". [type qualification*, qualified explosive, qualification] Ref: 4170, AOP-7, AOP-26.	**homologation finale** *Matières explosives*: L'homologation finale s'applique à l'emploi de la matière explosive dans une application ou une munition spécifique. L'homologation finale est délivrée quand la matière a été évaluée au titre de la conception de la munition et lorsqu'on a pu prédire que, dans son rôle en question, elle peut être employée en toute sécurité à des fin opérationnelles ou d'instruction militaires. La base de données des résultats est un moyen d'appréhender "l'évaluation des risques". [homologation type*, qualification, matière explosive homologuée] Réf: 4170, AOP-7, AOP-26.
fireset *EED testing*: A high voltage firing unit designed to produce an electrical pulse with specific characteristics which normally consists of a firing capacitor, trigger vacuum gap switch and its trigger circuitry. Such a device is normally only used with EFI or EBW initiators. (4560)	**dispositif de mise de feu** Dispositif d'amorçage à haute tension conçu pour produire une impulsion électrique présentant des caractéristiques spécifiques, qui consiste normalement en un condensateur d'amorçage et un commutateur sous vide déclenché avec son circuit de déclenchement. Un tel dispositif n'est normalement utilisé qu'avec les initiateurs à film projeté ou à fil explosé. (4560)
firing The action to set off an explosive event.	**mise à feu** Action de déclencher un événement pyrotechnique. (GTPS)
firing capacitor *Electric ignition:* A device which can store an electric charge, intended to fire the initiator(s) of a fuzing or firing system.	**condensateur de mise de feu** *Allumage ou amorçage électrique* : Dispositif qui peut accumuler une charge électrique, prévue pour la mise à feu d' un système de fusée ou de mise de feu.
firing circuit 1. *Electric/electronic fuzing systems*: The complete (sub)system including the electro-explosive device (EED), power supplies and all associated electrical and electronic components and circuitry necessary for normal EED firing. Ref: 4238, 4416, 4187. 2. *Demolition materiel:* The electrical and explosive circuit connecting the firing control system and the demolition charges to permit their initiation. Ref: AOP-31. Alternative definition in AAP-6 and AAP-19.	**circuit de mise de feu** 1. *Systèmes de fusée électriques/électroniques*: (Sous)système complet comprenant les dispositif électro-pyrotechnique (DEP), l'alimentation de puissance et tout composants et circuits électriques et électroniques qui sont nécessaires pour la mise à feu normale du DEP. Réf: 4238, 4416, 4187. 2. *Matériel de destruction:* Circuit électrique et pyrotechnique reliant le système de commande de mise de feu avec les charges principales pour permettre leur initiation. Réf: AOP-31. Définition alternative dans l'AAP-6 et l'AAP-19

firing control delay The time elapsed from achievement of the armed condition to the time when controls on the delivery of a firing stimulus are removed. Ref: 4497.	**retard de mise à feu** Durée à partir de la réalisation de la condition armée jusqu'au moment où les verrouillages de mise à feu sont écartées. Réf: 4497.
firing control system The equipment used to provide the required stimulus (stimuli) to initiate the explosive train of a demolition system: electricity, light, EMR, mechanical energy, heat. Examples: exploder; firing control box with radio transmitter. Ref: AOP-31.	**système de commande de mise de feu** Equipement utilisé pour délivrer le(s) stimulus nécessaire(s) pour initier la chaîne pyrotechnique d'un système de destruction: électricité, lumière, radiation EM, énergie mécanique, chaleur. Exemples: exploseur; boîtier de commande avec émetteur radio. Réf: AOP-31.
firing energy Energy available in a munition or a weapon system to cause its firing.	**énergie de mise à feu** Énergie disponible dans une munition ou une arme pour sa mise à feu.
firing interval *Cannons , mortars and automatic weapons*: Time lapse between two successive firings during a sustained firing. See also the term "interval" in AAP-6, 6. [rate of firing]	**intervalle de tir** *Canons, mortiers et armes automatiques:* Délai entre les coups de feu successifs pendant un tir en rafale. Voir aussi AAP-6, 6 : intervalle. [cadence de tir]
firing level The level of a functional stimulus at which the probability of a successful firing of an explosive charge is estimated with a determined level of confidence (e.g., 95% double sided). The stimulus may be expressed as electrical, mechanical energy or power, like current-time, drop mass-height or gap width as an explosiveness parameter. [all-fire level, no-fire threshold, function level] Ref: AOP-32.	**niveau de mise à feu** Niveau d'un stimulus de fonctionnement auquel la probabilité de mise à feu réussie d'une charge explosive est estimé avec un niveau de confiance déterminé (p.e. 95% bilatéral). Ce stimulus peut être exprimé en termes d'énergie électrique, mécanique ou puissance, comme courant-durée de temps, masse-hauteur de chute ou distance d'ouverture comme para-mètre d'essai d'explosivité. [seuil de mise à feu, seuil de non-mise à feu, niveau de fonctionnement] Réf: AOP-32
firing rate: See "rate of firing".	**cadence de tir -**
firing stimulus A stimulus that will initiate the first explosive element in an explosive train. Ref: 4187.	**stimulus de mise à feu** Stimulus qui engendra l'initiation du premier élément d'une chaîne pyrotechnique. Réf: 4187.
firing stimulus relay system In a firing system of a deployed demolition system, the system conducting or transmitting the firing stimulus from the firing control system to the detonation relay system. [firing circuit, detonation relay system] Ref: AOP-31.	**système de relais de stimulus de mise de feu** Dans un système de mise de feu d'un système de destruction déployé, système qui conduit ou transmet le stimulus de mise à feu du système de commande vers le système de relais de détonation. [circuit de mise de feu, système de relais de détona-tion] Réf: AOP-31.

firing system 1. *Launching systems:* The aggregate of devices in a munition and its associated weapon system (including cannon, launcher and munition launch platform), which generate and control the operating signal to cause propelling charge or the propulsion system to function. For rockets and missiles: ignition system. 2. *Demolition materiel:* A system composed of elements designed to fire the main charge or charges. (AAP-6) Ref: AOP-31. A demolition firing system thus comprises the firing control system and the firing circuit. Together with the main charges it forms the demolition system. [initiation system]	**système de mise de feu** 1. *Systèmes de lancement:* Ensemble des équipements de la munition et le système arme associé (y compris la bouche de feu ou le tube lanceur et la plate-forme de lancement) qui génère et contrôle le signal qui occasionne le fonctionnement de la charge propulsive ou le système de propulsion. Pour les fusées et les missiles: système d'allumage. 2. *Matériel de destruction:* Ensemble des éléments permettant de mettre en oeuvre la ou les charges principales. (AAP-6) Réf: AOP-31. Un système de mise de feu de destruction comprend donc le système de commande de mise de feu et le circuit de mise de feu. Avec les charges principales il constitue le système de destruction. [dispositif d'amorçage]
firmware *Computing systems:* Instructions fixed in the computer in the "Read only" memory. The combination of a hardware device and computer instructions or computer data that reside as "read only" software on the hardware device. [embedded software] Ref : 4368, 4404, 4452.	**documentation industrielle** (ou **firmware**) *Systèmes informatiques*: Logiciel intégré dans la mémoire morte. La combinaison d'un dispositif "hardware" et des instructions ou des données d'ordinateur déposées en lecture seule sur le dispositif. [logiciel intégré en mémoire morte] Réf: 4368, 4404, 4452.
first return stroke - *Lightning*: See STANAG 4236.	**coup en retour initial** - *Foudre*: Voir STANAG 4236.
flash – *Lightning:* See STANAG 4236.	**éclair** - *Foudre*: Voir STANAG 4236.
floating mine *Sea mines*: A mine visible on the surface. (AAP-6)	**mine flottante** *Mines navales*: Mine visible en surface. (AAP-6)
forcing function: See "environmental force".	**force d'environnement** -
Fraunhofer region: See "far field".	**zone de Fraunhofer**: Voir "champ lointain".
free fall The unrestrained vertical descent experienced by an unsupported body, due entirely to the influence of gravity. [drop, shock, impact] Ref: 2914; AECP-1, 4375.	**chute libre** Descente verticale non freinée que subit un corps non soutenu, uniquement due à la force de la gravité. [chute, choc, impact] Réf: 2914; AECP-1, 4375.
Fresnel region See "near field".	**zone de Fresnel**: Voir "champ proche".
fuel-air explosive Liquids, slurries, gases or dust particles which exhibit explosive properties when mixed with air. The individual substances may not be explosives. The mixtures of combustible liquids (slurries) and air ordinarily require initiation by a booster explosive. [explosive aerosol *, slurry] Ref: AOP-7, AOP-31.	**explosif combustible – air** Liquides, bouillies, gaz ou matières pulvérulentes possédant des propriétés explosives en mélange avec l'air Prises séparément, ces diverses substances peuvent ne pas être explosives. Les mélanges air-combustible liquide / bouillie doivent être amorcés à l'aide d'un explosif de relais. Voir aussi l'AOP-7. [aérosol explosif*] Réf: AOP-7, AOP-31.

function (1) *Materiel*: Production of the output and/or effects for which a (sub)system or an element thereof is designed. For a munition, this covers all events in a munition during and after its firing leading to the explosive output of the main charge or other designated terminal effect. For a fuzing system, the production of an output capable of initiating a train of fire or detonation in an associated munition. [output, performance, effectiveness on target]	**fonctionnement** *Matériel:* Production de la sortie et/ou des effets pour lesquels un (sous)-système ou un de ses éléments a été conçu. Pour une munition, cela couvre tout événement dans une munition après le tir, qui conduit à la sortie explosive de sa charge principale ou autre effet terminale. Pour un système de fusée, la production d'une sortie capable d'initier la chaîne pyrotechnique d'une munition associée. [sortie, performance, efficacité sur la cible]
function (2) *Human action:* Execution of the arming and firing sequences, as designed, such that the explosive train is aligned and initiated or some other energy source is activated. [deployment] Ref: 4333, 4432, 4433.	**faire fonctionner** *Activité humaine*: Exécution des séquences d'armement et de mise à feu, suivant la conception, de manière à aligner et initier la chaîne pyrotechnique ou l'activation d'une autre source d'énergie. [mise en oeuvre] Réf: 4333, 4432, 4433.
function level The level of a functional stimulus at which the probability of a successful functioning of a receptor is at a level estimated with a determined level of confidence (e.g.,95% double sided). [firing level – for explosive events]	**niveau de fonctionnement** Niveau d'un stimulus de fonctionnement auquel la probabilité de fonctionnement réussi d'un récepteur est estimé avec un niveau de confiance déterminé (p.e. 95% bilatéral). [niveau de mise à feu - pour événements pyrotechniques]
functional stimulus Any physical agent able to provoke a specified function or reaction. Such a physical agent may be mechanical, electrical, irradiated or other form of energy, impulse or pyrotechnic or explosive output. The item which produces the stimulus is called the donor; the device or substance in which the reaction can be provoked is called the acceptor.	**stimulus de fonctionnement** Tout phénomène physique, capable de provoquer une fonction ou une réaction. Un tel phénomène peut être mécanique, électrique, radiative ou autre forme d'énergie, sortie impulsionnelle, ou pyrotechnique ou explosive. L'article qui produit le stimulus est appelé le donneur; le dispositif ou la substance dans lequel la réaction peut être provoquée s'appelle le récepteur.
fuse, blasting, time: See "safety fuze".	**mèche lente** -
fuze A single device which controls the initiation of a munition. 1. Alternative definition in AAP-6. 2. See also "fuzing system". [fuzing system, initiation, firing, ignition]	**fusée** Dispositif particulier qui contrôle l'initiation d'une munition. 1. Définition alternative dans l'AAP-6. 2. Voir aussi "système de fusée". 3. "contrôler" dans le sens de "commander". 4. "Bouchon allumeur" pour mines et grenades. 5. Terme également utilisée pour missliles spatiales. [allumeur, bouchon allumeur, dispositif d'amorçage, initiation, mise de feu, allumage]
fuze -	**allumeur**: Voir "fusée".
fuze -	**bouchon allumeur**: Voir "fusée".
fuze -	**dispositif d'amorçage**: Voir "fusée".

fuze safety system *Fuzing systems*: The aggregate of devices included in the fuze to prevent its arming and functioning until a valid launch environment has been sensed and the arming delay has been achieved. Examples: environmental sensors, launch event sensors, command functioned devices, removable critical items, logic networks, plus the initiation or explosive train interrupter. [safety system] Ref: AOP-20.	**système de sécurité de fusée** *Systèmes de fusée* : Ensemble des dispositifs que comprend la fusée pour empêcher son armement et son fonctionnement jusqu'à ce que les conditions de lancement valides soient détectées et que le délai du retard d'armement soit écoulé. Exemples : détecteurs d'environnement, détecteurs de lancement, dispositifs fonctionnant sur commande, éléments critiques détachables ou réseaux logiques, plus l'interrupteur d'initiation ou de la chaîne pyrotechnique. [système de sécurité] Réf. AOP-20.
fuze setter -	**débouchoir de fusée** : Voir "programmateur de fusée".
fuze setter A device for setting a unique and required function of the fuze. For the purpose of STANAG 2916 the following are not considered to be fuze setters: (a) commonly available aids used in setting such as screw drivers, and (b) devices to aid in setting which are shipped with each box of fuzes. [setter slots] Ref: 2916, 4187.	**programmateur de fusée** Dispositif permettant de régler un fonctionnement unique requis de la fusée. Dans le cadre du STANAG 2916, ne sont pas considérés comme programmateurs de fusée: (a) les dispositifs auxiliaires habituellement disponibles utilisés pour le réglage tels que les tourne-vis, et (b) les appareils de réglage auxiliaires expédiés avec chaque boîte de fusées. [débouchoir de fusée*, fentes des débouchoirs] Réf: 2916, 4187.
fuzing system A physical system designed to: a. sense a target or respond to one or more prescribed conditions, such as elapsed time, pressure, or command; b. initiate an explosive train in a munition; c. provide as a primary role safety and arming in order to preclude munition arming before the desired position or time. A safety and arming device is a part of a fuzing system. [fuze, initiator, igniter, firing system, initiation system] Ref : 4187, AOP-20.	**système de fusée** Système physique conçu pour : a. détecter un objectif ou réagir à une ou plusieurs conditions prescrites, par exemple le temps écoulé, la pression ou une commande ; b. amorcer une chaîne pyrotechnique dans une munition, c. assurer en premier lieu la sécurité et l'armement afin de rendre impossible l'armement de la munition avant que soit atteint la position ou le moment souhaité. Un dispositif de sécurité et d'armement fait partie du système de fusée. [fusée, initiateur, allumeur, système de mise de feu, dispositif d'amorçage] Réf : 4187, AOP-20.
gas actuator Device intended to perform one or several mechanical actions using the gases from the reaction of an explosive. [actuator] Ref : 4519.	**pyromécanisme à gaz** Dispositif destiné à réaliser une ou plusieurs actions mécaniques en utilisant les gaz produits par la réaction d'une matière explosive. [actionneur pyrotechnique* (GTPS), servocommande] Réf : 4519.

gas generator A munition or a subsystem of a munition, that generates gases to be used for a purpose other than providing thrust for direct rocket motor propulsion of the host munition. The gas generator comprises solid or liquid fuel and where applicable fuel tanks, combustion chamber, pressure monitor system, pressure release system, particle filter, initiation system, igniters and pipe work to the application system. Ref : 4519.	**générateur de gaz** Munition ou sous-système de munition qui génère des gaz destinés à être utilisés dans un but autre que celui de fournir la poussée pour la propulsion par moteur roquette de la munition hôte. Le générateur de gaz se compose d'un carburant solide ou liquide, des réservoirs, d'une chambre de combustion, de capteurs de pression, du circuit de détente, du filtre des particules, les allumeurs avec le système de mise de feu et les conduits de propagation au système d'application. Réf: 4519.
generic role *Qualification of explosives:* Main domains for the use of explosive materials in munitions: a. primary explosive; b. booster explosive; c. main charge high explosive; d. solid gun propellant; e. solid rocket propellant ; f. liquid propellant; g. pyrotechnic compositions. [(basic or type qualification] Ref. 4170.	**usage générique** *Homologation de matières explosives:* Domaines principales pour l'application de matières explosives dans les munitions : a. explosif primaire b. explosif de relais pyrotechnique; c. explosif de chargement; d. propergol solide pour canons ; e. propergol solide pour roquettes ; f. propergol liquide; g. compositions pyrotechniques. [homologation] Réf. 4170.
gradient circuit *Mines*: A circuit which is actuated when the rate of change of the magnitude of the influence is within predetermined limits. See also AAP-6.	**mise de feu à gradient** *Mines*: Circuit de mise de feu qui ne fonctionne que sur le taux de variation du niveau de l'influence reçue se produisant entre certaines limites fixées à l'avance. Voir aussi AAP-6.
ground voltage transient *Lightning tests*: See STANAG 4327.	**transitoires de potentiel de masse** *Essais foudre* : Voir STANAG 4327.
guided missile A missile whose path can be controlled during flight (OB) [missile, teleguided missile, self-guided missile, projectile, rocket]	**missile** Projectile autopropulsé dont la trajectoire peut être guidée en cours de vol. [missile (télé)guidé*, fusée, munition auto-guidée, projectile, roquette]
gun powder: See "black powder".	**poudre noire** -
gun propellant Substance or mixture of substances, which is required to burn in a controlled manner within a gun combustion chamber producing hot gases capable of propelling a projectile at high velocity. Combustible cases may also be included as they contribute to the overall energy of the propellant. Ref: 4170, AOP-26.	**poudre pour armes** Matière ou mélange de matières qui doivent brûler de façon contrôlée à l'intérieur d'une chambre de combustion d'arme en produisant des gaz chauds capables de propulser un projectile à grand vitesse. Les douilles combustibles peuvent également être concernées puisqu'ils contribuent à l'apport de l'énergie totale. Réf: 4170, AOP-26.

hand emplaced munition (HEM) A munition that is manually emplaced at, or hand-thrown to, the point of its intended function, and requires user action both to commit it to arm and to achieve safe separation. Examples are: most demolition systems, grenades and pyrotechnic devices. Ref: 4497.	**munition à positionnement manuel** Munition mise en place manuellement ou lancée à la main jusqu'au point de fonctionnement prévu, et qui nécessite l'action de l'utilisateur à la fois pour sa mise en état de service et pour atteindre sa distance de sécurité. Exemples: la plupart des systèmes de destruction, des grenades et des dispositifs pyrotechniques. Réf: 4497.
handling Any form of localized movement of materiel (as distinct from transportation) either by purely manual means or with the assistance of mechanical aids. Materiels handling is defined as the movement of materials (raw materials, scrap, semi-finished and finished) to, through and from production processes; in warehouses and storage; in receiving and shipping areas, and to, and within, combat and other units. Generic term. Ref: 2914, AECP-1. See also AAP-6.	**manutention** Toute forme de mouvement localisé du matériel (par opposition au transport), soit par des moyens purement manuels, soit avec l'aide d'auxiliaires mécaniques. Par définition, la manutention des matériaux consiste à déplacer les matériaux (matières premières, déchets, produits semi-finis et finis) vers les chaînes de production, dans ces chaînes ou à leur sortie, dans les entrepôts et les magasins dans les zones de réception et d'expédition, ainsi que vers les unités combattantes ou autres, et au sein de celles-ci. Terme générique. Réf: 2914, AECP-1. Voir aussi AAP-6.
hardening *Munitions design*: The process by which a munition may be protected against potentially hazardous effects induced by the environment, by including particular features in the design. [safety, life cycle, insensitive munitions] Ref. 4238, 4370, 4439.	**renforcer** *Conception de munitions:* Processus par lequel une munition peut être protégée contre les effets potentiellement dangereux, induits par l'environnement, par application de caractéristiques particulières dans la conception. [sécurité, cycle de vie, munitions à risques atténués] Réf. 4238, 4370, 4439..
hazard A condition that is a prerequisite to a mishap. Any phenomenon –environmental force or intrinsic effect- having the potential to induce an adverse effect in the munition compromising its safety or its suitability for service. It is characterized by its nature, severity or probability of occurrence. [mishap, risk, danger, threat] Ref : AOP-15, MIL-STD-882.	**danger** Condition préalable à un accident. Tout phénomène - de l'environnement ou effet intrinsèque- qui a le potentiel de provoquer un effet dans la munition qui compromet sa sécurité ou son aptitude au service. Elle est caractérisée par sa nature, sa sévérité ou la probabilité de l'événement. [accident, risque, menace] Réf : AOP-15, MIL-STD-882.
hazard analysis The systematic examination of a system or an item and its life cycle to identify hazardous situations and events including those associated with human, product and environmental interfaces, and to assess their consequences to the functional and safety characteristics of the system or the item. [risk analysis, risk, hazard, safety]	**analyse des dangers** Examen systématique d'un système ou d'un article et son cycle de vie, afin d'identifier les situations et événements dangereuses, y compris celles qui sont relatés avec les interfaces humaines, de produits et de l'environnement, et d'évaluer leurs conséquences concernant leurs caractéristiques de fonctionnement et de sécurité du système ou de l'article. [analyse de risque, risque, sécurité]

hazard and operability (HAZOP) analysis A study carried out by the application of guide words to identify all deviations from design intent, with undesirable effects for safety and operability.	**analyse de risque opérationnelle** Étude effectuée par l'application de mots clé pour identifier toute déviation de l'intention conçue, ayant un effet non-désirable pour la sécurité et l'opérabilité.
hazard level: See "hazard severity"	**gravité du danger** -
hazard probability The aggregate probability of occurrence of the individual events that could create a specific hazard. [risk]	**probabilité du danger** Probabilité dans l'ensemble de l'occurrence des événements individuels susceptibles à créer un danger potentiel. [risque]
hazard severity The extent of the consequences which could be caused by a hazard. [hazard level*]	**gravité du danger** L'importance des conséquences d'un accident qui pourraient être provoquées par cet accident. [niveau du risque*]
hazardous state: See "unsafe conditions".	**état dangereux**: Voir "conditions dangereuses".
high explosive Substance or mixture of substances which, in its application as primary, booster or main charges, is designed to detonate. (OB) Sometimes confused with "main charge high explosive". [explosive material, main charge high explosive, primary explosive, secondary explosive, booster explosive] Ref: 4170, AOP-7, 4397.	**explosif** Substance ou mélange de substances qui, utilisé comme charge primaire, charge de renforcement ou charge principale, est conçu pour détoner. [matière explosive, charge explosive, explosif de chargement, explosif primaire, explosif secondaire, explosif de relais] Réf: 4170, AOP-7, 4397.
hollow charge A shaped charge producing a deep cylindrical hole of a relatively small diameter in the direction of its axis of rotation. (AAP-6, AAP-19) [shaped charge] Ref: 4526, AOP-31.	**charge creuse** Charge formée destinée à produire suivant son axe de révolution une perforation profonde d'un diamètre relativement petit. (AAP-6, AAP-19) [charge formée] Réf: 4526, AOP-31.
homing mine *Sea mines:* A mine fitted with propulsion equipment which homes on to a target. (AAP-6)	**mine à tête chercheuse** *Mines navales*: Mine munie d'un dispositif de propulsion qui se dirige elle-même vers son objectif. (AAP/6)
horizontal action mine *Land mines:* A mine designed to produce a destructive effect in a plane parallel to the ground. (AAP/6)	**mine à effet horizontal** *Mines terrestres:* Mine conçue pour produire un effet de destruction dans un plan approximativement parallèle au sol. (AAP/6)
human error Wrong execution of a required action. [human failure]	**erreur humaine** Mauvaise exécution d'une action requise. [défaillance humaine]
human failure Wrong execution or omission of a required action. [human error]	**défaillance humaine** Mauvaise exécution ou omission d'une action requise. [erreur humaine]

igniter A device designed to produce a flame or a flash, which is used to initiate an explosive train. [ignition, initiator] Ref: AAP-19, AOP-31.	**allumeur** Dispositif conçu pour produire une flamme ou une étincelle, utilisé pour initier une chaîne pyrotechnique. [allumeur, initiateur] Réf: AAP-19, AOP-31.
igniter charge Charge used to produce the heat and pressure needed to ignite the main charge or an intermediate charge. [igniter, ignition]	**charge d'allumage** Charge utilisée pour produire la chaleur et la pression nécessaire pour allumer la charge principale ou une charge relais. [inflammateur, allumeur, allumage]
igniting component A device which deflagrates, but which does not detonate, producing either hot gas or hot particles, or a combination of both. It is part of an explosive train. Ref: 4363.	**composant d'allumage** Dispositif dont la charge explosive déflagre mais ne détone pas, produisant ou bien des gaz chauds ou des particules chaudes, ou les deux ensemble. Il fait partie d'une chaîne pyrotechnique. Réf: 4363.
ignition Commencement of combustion or a deflagration achieved by an igniter Ignition starts a combustion or a deflagration; initiation starts any explosive event. [initiation]	**allumage** Naissance d'une combustion ou une déflagration sous l'action d'un allumeur. L'allumage démarre une combustion, ou une déflagration. Exception: un bouchon allumeur peut donner une détonation. [amorçage]
ignition delay Time lapse between the moment of administration of the firing signal or firing stimulus to the primer and the moment of irreversible function of the explosive train, or the moment a specified condition is reached, such as a specified gas pressure in a combustion chamber. The firing stimulus may be an electric pulse, the impact of a striking pin, a flame, etc. The condition to be reached may be a specified pressure in a combustion chamber. [action time]	**retard d'allumage** Temps écoulé entre l'application du signal ou du stimulus de mise à feu à l'amorce et le moment où le fonctionnement de la chaîne pyrotechnique est irréversible ou l'atteinte d'une condition spécifiée, telle qu'une pression des gaz dans une chambre de combustion. Le stimulus de mise à feu peut être une impulsion électrique, l'impact d'un percuteur ou une flamme. La condition à spécifier peut être une pression spécifiée dans une chambre de combustion. [délai d'initiation*, durée du coup de feu]
ignition safety device (ISD) *Rockets and missiles:* See STANAG 4368.	**dispositif de sécurité d'allumage** *Roquettes et missiles* : Voir STANAG4368.
ignition system *Rockets and missiles*: The aggregate of devices involved in the control and generation of the operating signal to cause the rocket or missile motor to function. [initiation system, firing system] Ref: 4368.	**dispositif d'allumage** *Roquettes et missiles:* Ensemble des équipements impliqués dans la commande et la génération du signal qui provoque le fonctionnement du moteur de la roquette ou de la missile. [dispositif d'amorçage, système de mise de feu] Réf: 4368.

ignition train *General munitions:* A succession of pyrotechnic elements arranged to cause the ignition of a charge. *Fuzing systems*: The deflagration train beginning with the initiator and terminating in the igniter charge (4368). [pyrotechnic train*, explosive train] Ref:	**chaîne d'allumage** (1) *Munitions en général :* Chaîne d'éléments pyrotechniques arrangés pour provoquer l'allumage d'une charge. *Systèmes de fusée:* Chaîne des éléments pyrotechniques qui commence par l' initiateur et se termine par la charge d'allumage. (4368). [chaîne pyrotechnique]
IM assessment: See AOP-39.	**évaluation du caractère MURAT**: Voir AOP-39.
IM signature The worst plausible responses of a munition to each of the following specified environments: fast heating, slow heating, bullet impact, sympathetic reaction and light fragment impact. (4439 (2))	**signature MURAT** Les pires responses plausibles d'une munition suite à chacun des environnements spécifiés: échauffement rapide, échauffement lent, impact par balle, réaction par influence et impact par fragment léger. (4439 (2))
IM technology Any structural or energetic material, concept or design which is an integral part of the munition itself, that can reduce the probability and violence of a munition response when subjected to accidental or hostile stimuli. (4439 (2))	**technologie MURAT** Tout matériau structurel ou énergétique, conception, faisant intégralement partie de la munition elle-même, capable de réduire la probabilité et la violence d'une réponse de la munition qui subit des stimuli accidentels ou hostiles. (4439 (2))
impact action fuze A fuze that is set in action by the striking of a projectile or a bomb against an object. [direct action fuze*, percussion fuze*, contact fuze*, point detonating fuze]	**fusée percutante** Fusée mise en action par le choc du projectile ou de la bombe contre un obstacle. (AAP-6) [fusée à percussion*, fusée de contact*]
incendiary mix Pyrotechnic composition which upon ignition rapidly converts to high temperature gases and hot particles.	**composition incendiaire** Composition pyrotechnique qui, après son allumage, se transforme rapidement en gaz et particules chaudes à des températures élevées.
incident An unintended series of events which does not result in any undesired consequence. [mishap]	**incident** Série d'événements non intentionnés qui ne provoque aucune conséquence non désirable. [accident]
incineration *Disposal:* The controlled burning of unwanted material to produce gases and solid residues containing little or no combustible material. Ref: 4518.	**incinération** *Mise au rebut*: Combustion de matériaux non désirés, afin de produire des gaz et des résidus solides qui ne contiennent peu ou pas de matériau combustible. Réf: 4518.
independent computer program A computer program whose execution cannot be corrupted, misdirected, delayed or inhibited by any other program in the system. Ref: 4404.	**programme informatique indépendant** Programme informatique dont l'exécution ne peut être altérée, déviée, retardée ou bloquée par aucun autre programme du système. Réf: 4404.

independent safety feature A safety feature which is not affected by the function or malfunction of any other safety feature. A safety feature is independent if its integrity is not affected by the function or malfunction of other safety features. Ref : 4187, AOP-20.	**dispositif de sécurité indépendant** Dispositif de sécurité qui n'est pas affecté par le fonctionnement ou le mauvais fonctionnement d'un autre dispositif de sécurité. Un dispositif de sécurité est indépendant si son intégrité n'est pas affecté par le bon ou mauvais fonctionnement d'autres dispositifs de sécurité. Réf : 4187, AOP-20.
induced environment The conditions to which a materiel or component thereof may be exposed during its life cycle and which are directly or indirectly the result of human intervention.	**environnement induit** Conditions, produites directement ou indirectement par intervention humaine, auxquelles un matériel ou un composant d'un matériel peut être exposé pendant son cycle de vie.
induction circuit *Sea mines:* A circuit actuated by the rate of change in a magnetic field due to the movement of the ship or the changing current in the sweep. See also AAP-6.	**mise de feu à induction** *Mines navales*: Mise de feu répondant aux taux de variation du champs magnétique, dû au passage d'un bâtiment ou aux impulsions de la drague. Voir aussi AAP-6.
inert Not containing any explosive substance or other energetic material.	**inerte** Ne contenant aucune matière explosive ou autre matière énergétique.
inert electro-explosive device An electro-explosive device with its explosive material removed or replaced by ERM, but it retains the bridge wire, foil, etc. from which it is initiated. The instrumentation is designed so that it shall not change the radio frequency impedance of the EED (both in pin-to-pin and pin-to-case modes. Ref 4416.	**dispositif électro-pyrotechnique inerte** Dispositif électro-pyrotechnique dont la matière pyrotechnique a été retirée ou remplacée par un MER, mais il conserve le filament, la paillette, etc. auxquels il est initié. Cette instrumentation est conçue de manière à ne pas modifier l'impédance en hyperfréquence du DEP (en mode broche à broche et en mode broche à boîtier). Réf 4416.
inert mine *Land mines:* An inert replica of a standard mine. It is used for instructional purposes. (AAP/6)	**mine inerte** *Mines terrestres*: Copie inerte d'une mine standard, utilisée à des fins d'instruction. (AAP/6)
influence mine *Naval mines:* A mine actuated by the effect of a target on some physical condition in the vicinity of the mine or on radiations emanating from the mine. (AAP-6)	**mine à influence** *Mines navales*: Mine qui fonctionne sous l'effet de modifications apportées par un navire, soit à certaines conditions ambiantes, soit à des radiations émises par la mine elle-même. (AAP-6)
initiation Action by means of a suitable pyrotechnic device leading to a detonation, a deflagration or a combustion. See remark under « ignition ». [priming*, ignition]	**amorçage** Action donnant naissance à une détonation, une déflagration ou une combustion au moyen d'un dispositif pyrotechnique approprié. (GTPS) Voir observation sous « allumage ». [initiation*, allumage]
initiation system System to initiate an explosive train or component in a munition. [fuzing system, firing system]	**dispositif d'initiation** Système pour la mise à feu d'une chaîne ou d'un composant pyrotechnique dans une munition. [système de fusée, système de mise de feu]

initiator The first explosive element used in an explosive train, capable of directly causing its functioning. In a fuzing system, it is usually the detonator which, because it contains primary explosive, must be isolated from the remainder of the explosive train. [explosive train, primer] Ref. 4157, 4187, AOP16, AOP-20	**initiateur** Premier composant pyrotechnique utilisé dans une chaîne pyrotechnique, en mesure d'occasionner directement son fonctionnement. Dans un système de fusée c'est normalement le détonateur qui doit être isolé de la suite de la chaîne pyrotechnique par un interrupteur. [chaîne pyrotechnique, amorce*] Réf. 4157, 4187, AOP16,AOP-20.
initiator -	**amorce** : Voir "initiateur".
in-line explosive train : See « non interrupted explosive train ».	**chaîne pyrotechnique non interrompue -**
insensitive munition (IM) Munition which reliably fulfils its performance, readiness and operational requirements on demand, but which minimizes the probability of inadvertent initiation and severity of subsequent collateral damage to the weapon platform, logistic systems and personnel when subjected to unplanned stimuli. Appropriate analysis and test methods are referred to in AOP-15 and AOP-39. [IM assessment]	**munition à risques atténués (MURAT)** Munition qui répond de façon fiable aux exigences en matière de performances, de disponibilité et de besoins opérationnels tout en réduisant au minimum la probabilité d'initiation intempestive quand elle est soumise à des sollicitations accidentelles, ainsi que la gravité des dommages collatéraux qui en résulteraient pour le plate-forme de lancement, les systèmes logistiques et le personnel. Des méthodes d'analyse et d'essais sont données comme référence dans l'AOP-15 et l'AOP-39. [évaluation MURAT]
installed munition Any munition placed in a long-term fixture to the vehicle structure with or without anti-vibration mounts or isolators. [loose cargo munition, secured cargo munition] Ref. AOP-34	**munition installée pour le transport** Munition installée dans une fixation permanente qui est dans la structure du véhicule, avec ou sans cadres anti-vibrations ou isolateurs. [munition non-arrimée, munition arrimée] Réf : AOP-34.
instrumented electro-explosive device *EED tests :* An inert electro-explosive device (EED) which has sensors in contact or close proximity to the bridge wire or ERM to measure the thermal energy or power induced. This instrumentation is designed so that it shall not change the radio frequency impedance of the EED, both in pin-to-pin and pin-to-case modes. Ref. 4324, 4416.	**dispositif électro-pyrotechnique instrumenté** *Essais de DEP :* Dispositif électro-pyrotechnique (DEP) inerte qui possède des capteur en contact ou à proximité du filament ou du MER pour mesurer l'énergie thermique ou la puissance induite. Cette instrumentation est conçue de manière à ne pas modifier l'impédance hyperfréquence du DEP, en mode broche à broche et en mode broche à boîtier. Réf. 4324, 4416.
integrating circuit A circuit whose actuation is dependent on the time integral of a function of the influence. (AAP-6)	**mise de feu à intégration** Mise de feu qui réagit à l'intégrale par rapport au temps d'une fonction de l'influence perçue. (AAP-6)
intended role : See "generic role"	**usage générique -**
intercepted lightning strike *Lightning :* See STANAG 4236.	**coup de foudre intercepté** *Foudre* : Voir STANAG 4236.

interchangeability A condition which exists when two or more items, in a specified life cycle and environment, possess such functional and physical characteristics as to be equivalent in safety, performance and durability, and are capable of being exchanged one for the other without alteration of the items themselves, or of adjoining items, except for adjustment, and without selection for fit and performance. Derived from AAP-6 ; added "safety". [interoperability]	**interchangeabilité** Qualité réalisée lorsque plusieurs éléments, dans un cycle de vie et un environnement spécifiés, présentent des caractéristiques de sécurité, fonctionnelles et matérielles les rendant équivalents en sécurité, performances et en durée de vie, et sont utilisables les uns à la place des autres sans qu'il soit nécessaire : a. de modifier ces éléments eux-mêmes ou des éléments associés, sauf pour des réglages ; b. de procéder à une sélection parmi ces éléments en vue de leur mise en place ou d'obtention de performances déterminés. Dérivé de l'AAP-6 ; ajouté : "sécurité". [interopérabilité]
intercloud flash *Lightning :* See STANAG 4236.	**décharge inter nuages** *Foudre* : Voir STANAG 4236.
intermediate current *Lightning :* See STANAG 4236.	**courant intermédiaire** *Foudre* : Voir STANAG 4236.
intermediate packaging Inner packaging for tactical transportation. Ref : 4224, 4493.	**conditionnement intermédiaire** Emballage interne pour le transport tactique. Réf : 4224, 4493.
intermittent arming device A device included in a mine so that it will be armed only at set times. (AAP/6)	**dispositif de réceptivité intermittente** Dispositif rendant une mine réceptive que dans certaines périodes.(AAP/6)
interoperability The ability of systems, units or forces to provide services to and accept services from other systems, units or forces and to use the services so exchanged to enable them to operate effectively together. (AAP-6) [interchangeability]	**interopérabilité** Capacité de plusieurs systèmes, unités ou organismes don't l'organisation et les relations respectives autorisent une aide mutuelle qui les rend aptes à opérer de concert. (AAP-6) [interchangeabilité]
interrupted explosive train An explosive train in which the explosive path between the primary explosive charge and the lead and booster (secondary) explosives is functionally separated until arming. [non-interrupted explosive train, out-of-line explosive train] Ref : 4157, 4187, 4497, AOP-16, AOP-20.	**chaîne pyrotechnique interrompue** Chaîne pyrotechnique dans laquelle entre les explosifs primaires et le relais d'amorçage et le relais (explosifs secondaires) est fonctionnellement interdit jusqu'à l'armement. [chaîne pyrotechnique non interrompue] Réf : 4157, 4187, 4497, AOP-16, AOP-20.
interrupter A physical barrier which prevents the transmission of an explosive or burning effect between elements in an explosive train. Ref : 4187.	**interrupteur** Une barrière physique qui empêche la transmission d'une combustion ou d'une détonation entre éléments d'une chaîne pyrotechnique. Réf : 4187.
intracloud flash – *Lightning :* See STANAG 4236.	**décharge intra nuage** *Foudre :* Voir STANAG 4236.

intrusion The portion of the fuze that extends into the cavity of the projectile. [cavity] Ref : 2916.	**intrusion** Partie de la fusée qui correspond au logement du projectile. [logement] Réf : 2916.
irreversible failure Failure of a materiel caused under specified environmental conditions, and the materiel does not return to normal functional and safety conditions when these conditions cease. [failure, reversible failure]	**défaillance irréversible** Défaillance d'un matériel, provoquée dans des conditions d'environnement spécifiées, entraînant un non retour du matériel aux conditions de fonctionnement et de sécurité normales lorsque ces conditions ont cessées d'exister. [défaillance, défaillance réversible]
jet *Functioning of a shaped (hollow) charge* : Dense material part, generally metallic, cylindrical, stretched, fluid, solid or in particles, moving with high velocity, coming from the liner of a hollow charge which functioned. The jet causes the main part of the hollow charge effects.	**jet** *Fonctionnement d'une charge formée (creuse) :* Partie matérielle dense, généralement métallique, cylindrique, allongée, fluide, solide ou particulaire, animée d'une grande vitesse, provenant du revêtement d'une charge creuse qui a fonctionné. Le jet est responsible de la majeure partie des effets d'une charge creuse.
jettison : See « safe jettison ».	**largage** : Voir « largage de détresse ».
jettisoned mines *Naval mines :* Mines which are laid as quickly as possible in order to empty the minelayer of mines, without regard to their condition or relative positions. (AAP/6)	**jet de mines à la mer** *Mines navales :* Mines mouillées aussi rapidement que possible de façon à libérer le mouilleur de mines et sans tenir compte de leur condition ou position relative. (AAP/6)
laser cutting : See "laser grooving".	**découpe au laser** : Voir "fragilisation au laser".
laser grooving *Disposal* : Use of a laser to score a projectile case to create a circular groove which in combination with a tearing-breaking process would bisect the case to expose the filler. Ref : 4518.	**fragilisation au laser** *Mise au rebut :* Utilisation d'un laser pour entailler un corps de projectile. La fragilisation circulaire obtenue permet de fendre le corps en appliquant une méthode quelconque d'éclatement. Réf : 4518.
laser initiation The activation of an initiator by laser energy. [initiation, ignition] Ref : 4368.	**amorçage par laser** Amorçage d'un initiateur par énergie laser. Réf : 4368.
launch The irreversible discharging, firing, ejecting or releasing of a munition. [propulsion] Ref : 4187.	**lancement** Libération, tir, éjection ou largage irréversible d'une munition. [propulsion] Réf : 4187.
launch cycle The sequence of events happening during the period from the instant a munition is irreversibly committed to launch until it has left its launcher. Ref : 4187.	**cycle de lancement** La suite des événements pendant la période comprise entre le moment de mise en état de service de la munition et le moment où elle quitte son lanceur. Réf : 4187.
launch safety During launch of a munition, the absence of hazard to personnel, the launch platform or any associated materiel. Ref : 4432.	**sécurité de lancement** Pendant le lancement d'une munition, l'absence de risque pour le personnel, la plate-forme de lancement ou tout autre matériel associé. Réf : 4432.

launcher A structural device designed to support and hold a missile in position for firing. (AAP– 6)	**rampe de lancement** Appareillage conçu pour soutenir et maintenir une fusée en position de tir. (AAP– 6)
lead An intermediary secondary high explosive element or component, designed to transmit a detonation reaction. [relay*, explosive train, fuzing system] Ref : 4363, AOP-20, AOP-21, AOP-31.	**relais** (1) Élément ou composant intermédiaire constitué d'un explosif secondaire destiné à transmettre la détonation. [relais pyrotechnique*, charge relais*, chaîne pyrotechnique, système de fusée] Réf : 4363, AOP-20, AOP-21, AOP-31.
lead -	**charge relais** : Voir "relais"
leader *Lightning :* See STANAG 4236.	**précurseur** *Foudre* : Voir STANAG 4236 .
life cycle A time-based description of the events and environments an item experiences from manufacture to final expenditures or removal from the operational inventory. It includes one or more mission profiles and disposal or demilitarization. 1. The term « service life » does not cover disposal and destruction of the item ; « service life cycle is a part of « life cycle ». 2. The expected environments and the environmental profile are based on the life cycle. Ref AOP-15, AECTP-100, ARMP-1. [life-profile* (ARMP-1), manufacture to target or disposal sequence *, service life, environment]	**cycle de vie** Description chronologique des événements et conditions ambiantes auxquelles un article est exposé depuis le moment de sa fabrication jusqu'au moment où il est totalement consommé ou retiré de l'inventaire opérationnel. Il comprend un ou plusieurs profils de mission et destruction ou démilitarisation. . 1. Le terme « durée de vie en service » ne couvre pas destruction et démilitarisation ; « cycle de vie en service" est un sous-ensemble du « cycle de vie ». 2. Les environnements prévus et le profil d'environnement sont basés sur le cycle de vie. Réf AOP-15, AECTP-100, ARMP-1. [profil de vie*, cycle de vie en service*, durée de vie en service, environnement].
lightning attachment zone : See STANAG 4327.	**zone d'attachement de la foudre** : Voir STANAG 4327.
linear thermal expansion *Testing of explosive materials :* The change in length of a specimen due to a temperature change. [coefficient of linear thermal expansion] Ref 4525.	**expansion linéaire** *Essais de matières explosives* : Changement en longueur d'un échantillon suite à un changement de température. [coefficient d'expansion thermique linéaire] Réf .4525.
liquid propellant A substance, or mixture of substances, which is required to react in a combustion chamber in a controllable manner in order to generate propulsive force. These may be mono-propellants, bi-propellants or hybrids composed of liquids and solids. Ref. 4170.	**propergol liquide** Matière ou mélange de matières qui doivent brûler dans une chambre de combustion de façon contrôlée afin de générer une force propulsive. Celles-ci peuvent être des mono-propergols, des bi-propergols ou des hybrides constitués de liquides et de solides. Réf. 4170.
loading safety The property of the ammunition and its constituent parts that enables the ammunition to be loaded into a weapon with the required level of safety. (WAS) [bore safety, muzzle safety, mask safety]	**sécurité de chargement** Caractéristique de la munition et de ses éléments constitutifs qui permet la munition d'être chargée dans l'arme au niveau de sécurité requis. [sécurité dans 'âme, sécurité de bouche, sécurité de masque]

logic route The mapping of all functional paths that can be taken through a system operation. Ref : 4187.	**chemin logique du système** Identification de tous les chemins fonctionnels possibles dans l'opération d'un système. Réf : 4187.
logistic configuration The condition of materiel when prepared for storage and transportation along a line of communication. For munitions this usually implies : unarmed, and in its logistic package. Ref : 4375.	**configuration logistique** Etat des conditions d'un matériel prévu pour le stockage et le transport par voies de communication. Pour les munition, ceci implique normalement : non-armé et dans son emballage logistique. Réf : 4375.
logistic storage The long-term storage of items in depots, usually under controlled relative humidity conditions. (WAS) The items are normally in their logistic packages. [storage, tactical storage, storage environment]	**stockage logistique** **Emmagasinage de longue durée en entrepôt d'articles, normalement dans de conditions d'humidité relative contrôlées.** Les articles se trouvent normalement en conditionnement logistique. [stockage, stockage tactique, environnement de stockage]
logistic transportation The transport of items to and between, and from storage depots to and from maintenance workshops. (WAS) [transportation, tactical transportation]	**transport logistique** Transport d'articles vers, entre et hors entrepôts de stockage et vers et hors d'ateliers d'entretien. [transport, transport tactique]
look *Mines* : A period during which a mine circuit is receptive of an influence. (AAP/6)	**période de réceptivité** *Mines* : Période pendant laquelle la mise de feu d'une mine est sensible à une influence. (AAP-6)
loose cargo munition Any munition which is to be carried on the vehicle floor, in racking or in a some arrangement in which it has some freedom, however slight, to bounce, scuff or collide with other items of cargo or parts of the vehicle. [installed munition, secured cargo munition] Ref. AOP-34.	**munition non-arrimé** Munition, posée sur le plancher du véhicule, dans un casier ou une disposition dans lequel il y a du jeu pour rebondir, se frotter ou se heurter avec les autres articles du chargement or parties du véhicule. [munition installée, munition arrimée] Traduction provisoire. Réf. AOP-34.
lot A quantity of munitions, munition components or explosives, each of which is manufactured by one manufacturer under uniform conditions, and which is expected to function in a uniform manner. The lot is designated and identified by assignment of a serial number.	**lot** Quantité de munitions, de composants de munition ou de matières explosives, fabriquée par un seul producteur dans des conditions uniformes et qui est supposée fonctionner de manière uniforme. Le lot est désignée et identifiée par un numéro d'ordre.
lower conditioning temperature (LCT) The temperature to which test items are stabilized for cold tests. This temperature is based on the climatic region that the testing nation and the using nation predict to be the worst case cold environment that the test item will encounter during storage and transportation. [upper conditioning temperature] Ref : 4224, 4225, 4493.	**température inférieure de conditionnement** La température à laquelle les spécimens d'essai sont stabilisés en vue d'essais à froid. Cette température est celle de la région climatique que le pays effectuant les essais et les pays utilisateurs considèrent comme l'environnement froid correspondant au pire des cas auquel l'article testé sera exposé pendant le stockage et le transport. [température supérieure de conditionnement] Réf : 4224, 4225, 4493.

lower firing temperature (LFT) The temperature to which test items are stabilized for cold test firing. This temperature is based on the climatic region that the testing nation and the using nation predict to be the worst case cold firing environment that the test item will encounter during operations. [upper firing temperature] Ref : 4224, 4225, 4493.	**température inférieure de tir** La température à laquelle les spécimens d'essai sont stabilisés en vue d'essais de tir à froid. Cette température est celle de la région climatique que le pays effectuant les essais et les pays utilisateurs considèrent comme l'environnement de tir à froid correspondant au pire des cas auquel l'article testé sera exposé au cours des opérations. [température supérieure de tir] Réf : 4224, 4225, 4493.
machine compliance *Testing of explosives :* See STANAG 4443.	. *Essais matières explosives* : Voir STANAG 4443.
magnetic mine A mine which responds to the magnetic field of a target. (AAP/6)	**mine magnétique** Mine don't la mise de feu réagit au champ magnétique provoqué par un objectif. (AAP/6)
main charge The explosive charge which is provided to accomplish the end result in a munition ; e.g., bursting a casing to produce blast and fragmentation, splitting a canister to dispense sub-missiles or producing other effects for which it may be designed. (OB)	**charge principale** Charge explosive ayant pour but de produire dans une munition le résultat final, par exemple : éclatement d'une enveloppe pour produire un effet de souffle et de fragmentation, éclatement d'une boite à mitraille pour disperser des projectiles secondaires ou produire d'autres effets pour lesquels la munition a été conçue.
main charge high explosive A compound or formulation such as TNT, generally used as the final charge to obtain the desired effect in an explosive application. These materials generally require initiation by a booster explosive. [high explosive, charge, explosive filling] Ref : AOP-7, AOP-26.	**explosif de chargement** Substance ou mélange tel que la tolite, généralement utilisés comme charge finale pour obtenir l''ffet souhaité dans une application pyrotechnique. Ces matières doivent généralement être amorcées par un explosif de relais. [charge, chargement] Réf : AOP-7, AOP-26.
maintainability The ability of an item, under stated conditions of use, to be retained in or restored to a specific condition when maintenance is performed by personnel having specified skills levels under stated conditions and using prescribed procedures and resources. (AMRP-1) [reliability]	**maintenabilité** Aptitude d'un article, dans des conditions d'utilisation déterminées, à être maintenu dans un état spécifié ou à être ramené dans un état spécifié lorsque la maintenance est assurée, par du personnel spécialement qualifié, dans des conditions déterminées et en utilisant des procédures et des moyens prescrits. (AMRP-1) [sûreté de fonctionnement, fiabilité]
mandatory data Test and analysis results concerning safety, suitability for service and performance of a munition or an explosive which shall be provided to determine its acceptability for military use. [optional data] For explosive materials, see AOP-7.	**données obligatoires** Résultats des essais et des analyses concernant la sécurité, l'aptitude au service et la performance d'une munition ou une matière explosive qui doivent être fournis pour déterminer l'acceptabilité pour l'utilisation militaire. [données complémentaires] Pour les matières explosives, voir AOP-7.

mandatory test Test deemed essential to produce adequate data for assessing the safety and suitability of a munition or an explosive materiel being considered in a military application. Mandatory tests are listed by each nation in the appropriate document. [optional tests, mandatory data] Ref : 4325, AOP-7.	**essai obligatoire** Essai jugé essentiel pour obtenir les données satisfaisantes pour l'évaluation de la sûreté et de l'aptitude au service d'une munition ou une matière explosive envisagée pour une application militaire. Les essais obligatoires ont été énumérés par chaque nation dans le document appropriée. [essai fondamental*, essais complémentaires, données obligataires] Réf : 4325, AOP-7.
manufacture to target or disposal sequence (MTDS) : See "life cycle".	**cycle de vie** -
manufacture to target sequence (MTS) : See "service life cycle".	**cycle de vie en service** -
margin analysis Analytical procedures grouping : - identification of operating margins (tolerance analysis, worst case analysis, etc.) and - stress/strength type analyses. [hazard analysis]	**étude de marges** Analyses regroupant : - la recherche de marges de fonctionnement (analyses de tolérance, " cas pires », etc.) - les analyses du type contrainte/résistance. [analyse des risques]
mask safety The property of ammunition and its constituent parts that enable firing through vegetation (mask) close to the weapon without a burst or igniferous burst resulting. (WAS) [loading safety, bore safety, muzzle safety]	**sécurité de masque** Caractéristique de la munition et de ses éléments constitutifs permet le tir à travers une végétation (masque) auprès de l'arme sans causer une explosion ou un début d'explosion. [sécurité de chargement, sécurité dans l'âme, sécurité de bouche].
materiel All equipment, stores, packaging and supplies used by the military forces. Generic term. Ref. 2895, 2914, AECP-1, 4242.	**matériel** Tout équipement, les matériels, les emballages et les approvisionnements utilisés par les forces militaires. Terme générique. Réf. 2895, 2914, AECP-1, 4242).
maximum no-fire stimulus (MNFS) : See "no-fire threshold".	**impulsion maximum de non mise à feu** : Voir "seuil de non-feu ".
maximum operating pressure (MOP) *Cannon systems* : The Extreme Service Condition Pressure (ESCP) plus three standard deviations in pressure estimated during the cannon design phase. See further STANAG 4110. For mortars, see « maximum operating pressure (MOP) curve ». [chamber pressure, permissible maximum pressure]	**pression maximale de fonctionnement (PMF)** *Systèmes de canon* : La pression dans les conditions d'utilisation extrêmes (PCUE) plus trois écart types en pression estimé en développement du canon. Voir ensuite STANAG 4110. Pour les mortiers, voir « courbe de pression maximale de fonctionnement" CPMF. [pression de chambre, pression maximale permise]

maximum operating pressure (MOP) curve *Mortars* : The curve derived from the pressures generated at each point in a specified mortar barrel by a specified charge under the most extreme service conditions (ESC) of which the probability of exceeding a specified value is judged to be acceptable. For further details, see STANAG 4225. [maximum operating pressure, chamber pressure, permissible maximum pressure]	**courbe de pression maximale de fonctionnement (CPMF)** *Mortiers* : Courbe établie à partir des pressions produites en chaque point d'un tube de mortier spécifique par une charge spécifique dans les conditions d'utilisation extrêmes et don't la probabilité qu'elle dépasse une valeur spécifiée est jugée acceptable. Pour des détails, voir STANAG 4225. [pression maximale de fonctionnement, pression de chambre, pression maximale permise]
mean power density *Electromagnetic fields* : The mean intensity of electromagnetic radiation expressed in Watts per square metre ($W \cdot m^{-2}$). Ref : 4234.	**densité de puissance moyenne** *Champs électromagnétiques* : Intensité moyenne de rayonnement électromagnétique exprimée en Watt par mètre carré ($W \cdot m^{-2}$). Réf : 4234.
mechanical situation The distinctive combination of mechanical events and circumstances which characterizes a particular mode of handling or transportation. Ref : 2914.	**situation mécanique** Combinaison distinctive d'éléments et de circonstances mécaniques qui caractérise un mode de manutention ou de transport particulier. Réf : 2914.
mechanical time fuze (MT fuze) A time fuze in which the timing function is performed by a mechanical clockwork.	**fusée chronométrique mécanique** Fusée chronométrique où la fonction de mise de temps est exercée par un mouvement mécanique.
meltout *Disposal* : Removal of the energetic material from the munition envelope by applying heat to the filler causing it to melt and flow out. Examples of meltout techniques are : autoclave, steamout, and heating. Ref : 4518.	**déchargement par coulée** *Mise au rebut :* Extraction, par échauffement du corps de la munition, des matériaux énergétiques qui fondent et coulent hors de l'enveloppe. Quelques exemples de techniques de déchargement par coulée : autoclave, jet de vapeur, échauffement. Réf : 4518.
memory integrity *Computing systems :* The assurance that the computer program or data is not altered or destroyed inadvertently or deliberately. [data integrity]. Ref : 4404.	**intégrité de la mémoire** *Systèmes informatiques :* Garantie que le programme ou les données informatiques ne sont ni altérées ni détruits par inadvertance ou délibérément. [intégrité des données] Réf : 4404.
meteorological temperature The ambient air temperature measured under standard conditions of ventilation and radiation shielding in a meteorological screen at a height of 1.2 to 2.0 m above the ground. Ref. 2895.	**température atmosphérique** Température de l'air mesurée dans des conditions normalisées de ventilation et de protection contre le rayonnement, dans un abri météorologique situé à une hauteur de 1,20 à 2 mètres au-dessus du sol. Réf. 2895.

mine 1. *Land mines* : An explosive material, normally encased, designed to destroy or damage ground vehicles, boats or aircraft, or designed to wound, kill, or otherwise incapacitate personnel. See also AAP/6. 2. *Sea mines* : An explosive device laid in the water with the intention of damaging or sinking ships or of deterring shipping from entering an area. Term 2 does not include devices attached to the bottoms of ships or to harbour installations by personnel operating underwater See also AAP-6.	**mine** 1. *Mines terrestres* : Matière explosive, généralement dans un enveloppe, destiné à détruire ou endommager les véhicules, embarcations ou aéronefs, ou encore à blesser, tuer ou à provoquer certaines incapacités parmi le personnel. Voir aussi AAP-6. 2. *Mines navales*: Engin explosif mouillé en vue d'endommager ou de couler des navires, ou d'interdire une zone au trafic maritime. Le terme 2 ne s'applique pas aux engins fixés à la coque des navires ou aux installations portuaires par du personnel opérant sous l'eau. Voir aussi AAP-6.
mine clearance *Land mines*: The process of detecting and / or removing land mines by manual or mechanical means. (AAP/6)	**déminage (2)** *Mines terrestres:* Action de détecter et/ou d'enlever les mines terrestres par moyens manuels ou mécaniques. (AAP/6)
mine countermeasures All methods for preventing or reducing damage or danger from mines. (AAP/6)	**lutte contre les mines** Toutes les dispositions prises pour éviter ou réduire les dommages et les dangers créés par les mines. (AAP/6)
mine disposal The operation designed to render safe neutralize, recover, remove or destroy mines. **See also AAP-6.**	**déminage (1)** Opération conçue pour la mise en position de la sécurité, la neutralisation, récupération, le relevage ou la destruction de mines. Voir aussi AAP-6.
minimum ignition energy (MIE) *Lightning tests*: See STANAG 4327. [no-fire threshold]	**énergie d'allumage minimale** *Essais foudre:* Voir STANAG 4327. [seuil de non-mise à feu]
minimum output level The lowest estimated level of the output stimulus of a donor element within a functional chain, determined at a sufficient level of confidence (e.g.,95% single sided). [all-function level, all-fire level, explosive train]	**niveau de sortie minimale** Niveau le plus bas estimé du stimulus de sortie d'un élément donneur dans une chaîne fonctionnelle déterminé avec un degré de confiance suffisamment élevé (p.ex. 95% unilatéral). [seuil de fonctionnement , seuil de mise à feu , chaîne pyrotechnique]
misfire 1. *Demolitions:* Failure to fire or to explode properly. 2. *Tube launched munitions, rockets and missiles:* Failure of a primer of the propelling charge of a round to function wholly or in part. [dud]	**raté** (2) 1. *Destruction:* Défaut de mise à feu ou d'explosion. 2. *Munitions à lancement par armes à tube, les roquettes et les missiles:* Défaut de fonctionnement total ou partiel d'une amorce (allumeur), d'une charge propulsive ou d'un projectile. Le terme "raté" couvre "dud" et "misfire". [non-feu, long feu]

missile A weapon or object to which self-contained propulsive energy is applied during flight. Self-propelled projectile. [guided missile, rocket, projectile] See also AAP-6.	**projectile autopropulsé** Arme ou corps auquel de l'énergie propulsive comprise dans le projectile est appliquée pendant le vol. [missile téléguidé, projectile] Voir aussi l'AAP-6.
mission critical system A system in which a failure can cause the task or operation demanded from the materiel to be abandoned or severely impaired. Ref: 4234.	**système critique pour la mission** Système dont une défaillance peut provoquer un fonctionnement amenant à une dégradation totale ou partielle du matériel. Réf: 4234.
mission profile A time-based description of the events and environments an item experiences from initiation to completion of a specified mission, to include the criteria of mission success or critical failures. (ARMP-1) [life profile, environmental profile, life cycle]	**profil de mission** Description échelonnée dans le temps des événements et des environnements auxquels un article est exposé entre le début d'une mission et son achèvement; ce profil comprend les critères de succès ou de défaillance critiques. (ARMP-1) [profil de vie, profil d'environnement, cycle de vie]
mobile mine *Sea mines*: A mine designed to be propelled to its proposed laying position by propulsion equipment like a torpedo. It sinks at the end of its run end then operates like a mine. (AAP/6)	**mine autopropulsée** *Mines navales*: Mine munie d'un appareil de propulsion analogue à celui d'un torpille, et qui coule en fin de parcours pour devenir une mine. (AAP/6)
molten salt destruction *Disposal*: The conversion of the organic constituents of the waste into non-hazardous substances such as carbon dioxide, nitrogen, and water. Any inorganic constituent of the waste is retained in the molten salt. The destruction of energetic materials waste is accomplished by introducing it together with oxidant gases, into a crucible containing a molten salt, such as sodium carbonate or a suitable mixture of the carbonates, chlorides or sulphates of sodium, potassium, lithium and calcium. Ref: 4518.	**destruction par sel fondu** *Mise au rebut*: Transformation des constituants organiques des déchets en substances non explosives telles que le dioxyde de carbone, l'azote, et l'eau. Les constituants inorganiques des déchets sont retenus dans le sel fondu. La destruction des déchets énergétiques est obtenue par adjonction de gaz oxydants, dans le creuset contenant du sel fondu tel que le carbonate de sodium ou un mélange de carbonates, des chlorures ou sulfate de sodium, potassium, lithium et calcium. Réf:4518.
moored mine *Sea mines:* A contact of influence-operated mine of positive buoyancy held below the surface by a mooring attached to a sinker or anchor on the bottom. (AAP/6)	**mine à orin** *Mines navales*: Mine à contact ou mine à influence de flottabilité positive maintenue au-dessous de la surface par un orin fixé à un crapaud reposant sur le fond. (AAP/6)
mortar A weapon system with a short barrel in proportion to its bore, rifled or smooth, for firing shells at high angles. Ref: 4225, 4433.	**mortier** Système d'arme, possédant un tube rayé ou lisse, court par rapport à son calibre, et permettant de tirer des projectiles à une grande élévation. Réf: 4225, 4433.
mortar bomb: See "mortar munition".	**munition de mortier**: -

mortar design pressure (DP) curve A pressure against location curve which specifies the particular value of pressure at each point along the barrel, of which, in the extreme service environment, the probability of exceeding a specified value is judged to be acceptable. Ref: 4225, 4433.	**courbe de pression nominale du tube de mortier** Courbe illustrant le rapport pression – emplacement et spécifie la valeur particulière de la pression à chaque point du tube, dont, dans l'environnement extrême pour l'utilisation, la probabilité qu'elle dépasse une valeur spécifiée est jugée acceptable. Réf: 4225, 4433.
mortar munition The complete munition, comprising projectile and propellant system, to be fired from a mortar. The projectile normally comprises fuze, body filled with HE or other filling, obturator, and tail assembly. The propellant system normally includes a primary cartridge and augmenting charge(s). [mortar bomb*, primary cartridge, augmenting charge] Ref: 4225, 4433.	**munition de mortier** Munition complète, qui comprend le projectile et la charge propulsive, à tirer dans un mortier de campagne. Normalement, le projectile est constitué d'une fusée, d'un corps chargé en explosif ou avec un autre chargement, d'un joint d'étanchéité et d'un empennage. La charge propulsive inclue normalement une cartouche d'allumage et des relais de mortier. [coup complet pour mortier*, cartouche d'allumage, relais de mortier] Réf: 4225, 4433.
mortar permissible maximum pressure (PMP) curve The pressure against location curve which specifies the value of pressure at each point along the barrel of which, in the extreme service environment, for reasons of safety, the probability of exceeding a specified value is judged to be acceptable. [permissible maximum pressure] Ref: 4225, 4433.	**courbe de pression maximale permise (PMP) pour tube de mortiers** Courbe illustrant le rapport pression – emplacement qui spécifie la pression en tout point du tube dont, et dans l'environnement extrême pour l'utilisation, pour des raisons de sécurité, la probabilité qu'elle dépasse une valeur spécifiée est jugée acceptable. [pression maximale permise] Réf: 4225, 4433.
mortar proof pressure (PP) That pressure, within specified tolerances, at which a mortar is proofed. The maximum mortar proof pressure is the mortar design pressure (DP); the minimum mortar PP should be the mortar permissible maximum pressure (PMP). Ref: 4225, 4433, 4110.	**pression d'épreuve de mortier** Pression dans les tolérances spécifiées, à laquelle un mortier est testé. La pression d'épreuve maximale d'un mortier est la pression nominale du mortier; la pression d'épreuve minimale du mortier devrait être la pression maximale permise (PMP) Réf: 4225, 4433, 4110.
mortar safe maximum pressure (SMP) curve A pressure versus location curve which specifies, as a result of design, the particular value of pressure at each point along the barrel which, if exceeded, could result in permanent deformation. Ref: 4225.	**courbe de pression maximale de sécurité pour mortier** Courbe qui illustre le rapport pression - emplacement et spécifie, suite à la conception, la valeur spécifique de la pression en chaque point du tube, sachant que tout dépassement de cette pression pourrait causer des déformations permanentes. Réf: 4225.

munition (US: ammunition) A complete device, (e.g., missile, shell, mine, demolition store, etc.) charged with explosives, propellants, pyrotechnics, initiating compositions or nuclear, biological or chemical material, for use in connection with offence, or defence, or training, or non-operational purposes, including those parts of weapon systems containing explosives. Alternative definition: Any item which function requires the presence in it of explosive or energetic materials. Other definitions in AAP-6. In logistic configuration, the logistic packaging of the munition is included. [ammunition]	**munition** Engin complet (par exemple un missile, un obus, une mine, un engin de destruction, etc.), chargé de matières explosives ou pyrotechniques, propergols, explosifs primaires ou de matériau nucléaire, biologique ou chimique, utilisé à des fins offensives, défensives ou d'entraînement, incluant les parties des systèmes d'armes contenant des matières explosives. Définition alternative: Tout article dont le fonctionnement exige la présence dans l'article de matières explosive(s) ou énergétiques. D'autres définitions dans l'AAP-6 et dans le recueil français de terminologie générale - Défense du 01 / 06 / 92. En configuration logistique, l'emballage logistique est compris dans la définition. [munition de tir]
munition response *Safety tests:* The result (such as blast, overpressure, fragment spray and heat, produced by a munition as a consequence of a specified stimulus. [explosiveness, response, response descriptor] Ref: 4439, AOP-39.	**réponse de la munition** *Essais de sécurité:* Résultat (par exemple souffle, surpression, projection d'éclats et flux thermique, produit par une munition sous l'effet d'un stimulus spécifié. [explosibilité, réponse, réaction type] Réf: 4439, AOP-39.
muzzle safety The property of the ammunition and its constituent parts that enables it to pass through a fixed obstacle close to the muzzle of the weapon with the required level of safety. (WAS) [mask safety, bore safety, loading safety]	**sécurité de bouche** Caractéristique d'une munition et de ses éléments constitutifs qui permet le tir à travers un obstacle fixé auprès de la bouche de l'arme au niveau de sécurité requis. [sécurité de masque, sécurité dans l'âme, sécurité de chargement]
Muzzle Velocity (MV) The velocity of the projectile at exit of the projectile base from the muzzle of the barrel (including any muzzle brake or similar devices if fitted). Alternative symbol: V_0. Ref: 4224, 4493.	**vitesse initiale (V_0)** Vitesse du projectile lorsque son culot sort de la bouche du tube (frein de bouche ou dispositif similaire compris, s'ils sont montés). Autre indication: MV. Réf: 4224, 4493.
natural environment The conditions to which a munition or explosive may be exposed during its life cycle, not including those from human intervention. [induced environment]	**environnement naturel** Conditions auxquelles une munition ou une matière explosive peut être exposée pendant son cycle de vie, à l'exception de celles provenant d'interventions humaines. [environnement enduit]
near field A region close to the emitter within which the radiation field is accompanied by other fields which do not radiate power away from the emitter. Electric and magnetic fields are not directly related as they are in the far field. [Fresnel region*, far field] Ref : 4234.	**champ proche** Région proche de l'émetteur dans laquelle le champ rayonné est accompagné d'autres champs ne propageant pas l'énergie loin de l'émetteur. Les champs électriques et magnétiques ne sont pas directement liés comme c'est le cas dans le champ lointain. [zone de Fresnel*, champ lointain]] Réf : 4234.

nearby flash *Lightning:* A lightning discharge which does not attach to the materiel, but due to its proximity, may induce significant current in the materiel either by electric field coupling, magnetic field coupling, ground currents or by a combination of all three. [strike] Ref: 4236.	**éclair de proximité** *Foudre:* Décharge qui n'est pas attachée au matériel, mais en raison de sa proximité, peut induire un courant significatif dans le matériel, soit par couplage dû au champ électrique, ou par couplage dû au champ magnétique, ou par des courants de masse, soit par une combinaison des trois effets. [coup de foudre] Réf: 4236.
nearby flash -	**décharge de proximité**: Voir "éclair de proximité".
neutralization 1. *Operational :* To restore a munition from an armed to a non-armed condition, either reversibly to permit reactivation, or irreversibly and permanently (sterilization). (AOP-31) Alternative definition for mines in AAP-6. [sterilization] 2. *Demilitarization:* To make a munition ineffective in its intended application. Ref: 4518.	**neutralisation** 1. *Opérationnel :* Désarmement de la munition, soit réversiblement pour permettre la réactivation, soit de manière permanente (stérilisation). (AOP-31) Définition alternative concernant les mines dans l'AAP-6. [stérilisation] 2. *Démilitarisation:* Rendre une munition inutilisable pour son application prévue. Réf: 4518.
new explosive This term encompasses explosive materials: a. not previously qualified; b. for which the existing specification defining its composition, its material constituents, or the process by which the composition is prepared has been modified; c. resulting from a change in manufacturer or manufacturing location; d. material used in a role for which it has not already been qualified. [qualified explosive material] Ref: 4170, AOP-7, AOP-26.	**matière explosive nouvelle** Cette expression comprend des matières explosives: a. une non encore homologuée; b. pour laquelle la spécification en vigueur définissant sa composition, les ingrédients qui la composent ou son procédé de préparation ont été modifiés; c. dont le producteur a changé ou qui est fabriquée sur un autre lieu de production; d. employée dans un usage pour lequel elle n'a pas encore été homologuée. [matière explosive homologuée] Réf: 4170, AOP-7, AOP-26.
new munition A munition which differs from munitions accepted for use by a NATO force, in terms of: a. design (definition in accordance with its full data package: material specifications, drawings, etc).; b. the users' manuals and other user instructions; c. production definition (product processing, tooling, quality assurance); d. acceptance testing; e. use in a specified role (weapon system, interfaces with joint elements) or f. its life cycle profile and the resulting environmental profile.	**munition nouvelle** Munition qui diffère des munitions adoptées pour utilisation par une force OTAN, par rapport à: a. la conception (définition suivant sa liasse de construction complète: spécifications des matériaux, plans, etc.).; b. les manuels et autres instructions d'utilisation; c. la définition de la production (procédés de traitement, outillage, assurance qualité.; d. les essais d'acceptation: e. son application dans un rôle spécifié (système d'armes, interfaces avec des éléments conjoints) ou f. son cycle de vie et le profil d'environnement associé.

no-fire threshold The of a stimulus which, under specified conditions, is predicted not to cause an explosive or an explosive component to function, with a stated probability. 1. This value is statistically expressed as the highest level of the functional stimulus (e.g., energy, impulse, drop height) at which the probability of not firing is at a sufficiently high level (e.g., $1\text{-}10^{-5}$) at a specified level of confidence (e.g., 95%, 1-sided lower level). 2. The no-fire threshold is a function of the type of stimulus. [safety, maximum no-fire stimulus*, no fire threshold stimulus*, no-function level, stimulus level, firing level, all-fire level] Ref: 4157, 4187, AOP-16, AOP-20, AOP-31, etc.	**seuil de non-feu** Valeur d'un stimulus, qu'il ne provoquera pas, dans des conditions spécifiées, le fonctionnement d'un qui ne provoquera , dans des conditions spécifiées, le fonctionnement d'une matière explosive ou d'un composant pyrotechnique, avec une probabilité spécifiée. 1. Cette valeur est exprimée en termes statistiques comme le niveau maximal du stimulus de fonctionnement (énergie, impulsion, hauteur de chute) auquel la probabilité de mise à feu est suffisamment élevée (p.e. $1\text{-}10^{-5}$) avec un niveau de confiance spécifié (p.e. 95%, unilatéral, niveau le plus bas). 2. Le seuil de non-mise à feu est fonction du type de stimulus. [sécurité, stimulus, impulsion maximale de non mise à feu*, seuil de fonctionnement, seuil de stimulus de non feu, seuil de mise à feu] Réf: 4157, 4187, AOP-16, AOP-20, AOP-31, etc.
no-fire threshold stimulus: See no-fire threshold.	**seuil de stimulus de non feu**: Voir seuil de non feu.
no-function threshold The value of a stimulus which, under specified conditions, is predicted not to cause a device or a component to function, with a stated probability. General term for no-fire threshold.	**seuil de non-fonctionnement** Valeur d'un stimulus, qu'il ne provoquera pas, dans des conditions spécifiées, le fonctionnement d'un dispositif ou d'un composant, avec une probabilité . Terme général pour seuil de non-feu.
non-interrupted explosive train An explosive train which has no physical interruption of the explosive elements. [explosive train in-line*, interrupted explosive train] Ref: 4187.	**chaîne pyrotechnique non interrompue** Chaîne pyrotechnique dans laquelle il n'y a pas d'interruption physique entre les divers éléments. [chaîne pyrotechnique interrompue] Réf: 4187.
one-look circuit *Mines:* A mine circuit which requires actuation by a given influence once only. (AAP/6)	**mise de feu à impulsion unique** *Mines*: Mise de feu qui ne demande qu'une seule influence. (AAP/6)
open burning *Disposal*: The burning of explosives and munitions in the external environment, without the control of resulting emissions. Ref: 4518.	**combustion à l'air libre** *Mise au rebut:* Action de brûler les matières et produits explosifs et les munitions à l'air libre, sans contrôle de l'émission des effluents obtenus. Réf: 4518.
open detonation *Disposal*: The detonation of explosives and munitions in the external environment, without the control of resulting emissions. Ref: 4518.	**pétardage** *Mise au rebut:* Détonation des explosifs et munitions à l'air libre sans contrôle de l'émission des effluents obtenus. Réf: 4518.
open-pit burning *Disposal*: The destruction of material by burning in a pit, often made of concrete, so that the material to be burned is not placed directly on the ground. Ref: 4518.	**combustion en puits ouvert** *Mise au rebut:* Incinération de matériaux à brûler dans un puits, souvent bétonné, afin d'éviter d'avoir à les brûler directement sur le sol. Réf: 4518.

operability A state of a system in which it can fulfil all requirements of performance and safety. See also AAP-6 "operational readiness".	**opérabilité** État d'un système dans laquelle il peut satisfaire à toutes les exigences en matière de performance et de sécurité. Voir aussi AAP-6, "état de préparation opérationnelle".
operational environment The total set of all external natural and induced conditions to which a materiel is exposed during its operational life. [environmental profile, life cycle, service life]	**environnement opérationnel** Ensemble de toutes les conditions physiques et chimiques auxquelles un matériel est exposé pendant sa durée de vie opérationnelle. [environnement d'exploitation*, profil d'environnement, cycle de vie, durée de vie en service]
operational life The time during which materiel may be expected to remain safe and serviceable when used under service or training conditions, when these are different from its storage conditions, but which is within the envelope of its life cycle. [service life, storage life, life cycle]	**durée de vie opérationnelle** Période pendant laquelle un matériel peut être estimé en état de sécurité et d'aptitude au service, quand il est utilisé dans des conditions de service et d'exercise, tout en étant comprises dans l'enveloppe de son cycle de vie. [durée de vie en service, durée de vie en stockage, cycle de vie]
optional data Data provided to supplement the mandatory data, for specific requirements, or for additional information. [mandatory data]	**données complémentaires** Données fournir en supplément des données obligatoires, pour répondre à des besoins spécifiques ou pour fournir un complément d'information. [données obligatoires]
optional test *General:* Additional test not required by the standard test requirements. Optional tests are usually performed during development, e.g. to determine the margins of safety and the reliability in the design. Ref. AOP-20. *Qualification of explosives:* A test that may be required by a National Authority to produce data for assessing the safety and suitability of an explosive material being considered in a military application. Ref: AOP-7 [mandatory tests]	**essai facultatif** *En général:* Essai supplémentaire non requis par les conditions d'essais standard. Les essais facultatifs sont généralement effectués durant le développement pour déterminer les marges de sécurité et la fiabilité de la conception. Réf : AOP-20. *Qualification de matières explosives*: Essai dont une autorité nationale peut exiger l'exécution, afin d'obtenir les données nécessaires à l'évaluation de la sûreté et de l'aptitude au service d'une substance explosive envisagée pour une application militaire. Réf: AOP-7. [essai complémentaire*, essai obligatoire], AOP-20.
ordnance A weapon system with its associated munitions and auxiliary materiel needed to fire the munition. [weapon system, munitions]	**arme et munitions** Système d'arme avec les munitions associées et les équipements nécessaires pour tirer la munition. [système d'arme, munitions. OTAN: matériel d'artillerie]

oscillating mine *Sea mines* A mine hydrostatically controlled, which maintains a pre-set depth below the surface of the water. See also AAP-6.	**mine ludion** *Mines navales*: Mine dont l'immersion est assurée par un dispositif de contrôle hydrostatique, qui la maintient à une profondeur prédéterminée sous la surface de l' eau. Voir aussi AAP-6.
overpressure The pressure resulting from the blast wave of an explosion. It is referred to as "positive" when it exceeds atmospheric pressure and "negative" during the passage of the wave when resulting pressures are less than atmospheric pressure. (AAP – 6)	**surpression** Pression résultant de l'onde de choc d'une explosion. On la nomme "positive" lorsqu'elle est supérieure à la pression atmosphérique et "négative" durant le passage de l'onde lorsque les pressions résultantes sont inférieures à la pression atmosphérique. (AAP – 6)
oxidation *Disposal*: The loss of electrons by an ion. This process is widely used to treat such wastes such as cyanides, pesticides, phenol, and sulphur compounds, common oxidants being chlorine or hypochlorites, potassium permanganate, and hydrogen peroxide. Ref: 4518.	**oxydation** *Mise au rebut*: Perte d'électrons d'un ion. Ce procédé est généralement employé pour traiter des déchets tels que les cyanures, pesticides et composés à base de phénol et soufre, les oxydants communs étant le chlore ou les hypochlorites, le permanganate de potassium et l'eau oxygénée. Réf: 4518.
packaged munition A munition in its full-service logistic packaging. Ref: 4224, 4493.	**munition conditionnée** Munition dans son emballage logistique complet. Réf: 4224, 4493. [munition emballée*]
part system test *Lightning tests:* See STANAG 4327.	**essai sur partie de système** *Simulation de foudre*: Voir STANAG 4327.
partial detonation Detonation of only a part of the total explosive load in a munition. (OB)	**détonation partielle** Détonation d'une partie seulement de toute la charge explosive de la munition.
passive mine A mine which does not emit a signal to detect the presence of a target, in contrast to an active mine. (AAP-6, 2) [active mine]	**mine passive** Mine qui n'émet pas de signal pour détecter la présence d'un objectif. (AAP-6, 2) [mine à dispositif actif]
patch A modification to a computer program that is inserted into the program in machine code. Ref: 4404.	**patch** *Systèmes informatiques:* Modification d'un programme informatique inséré dans le code du programme. [mise à jour*] Réf: 4404.
path *Computing systems*: The logical sequential structure that the program must execute to obtain a specific output. Ref. 4404.	**parcours** Structure séquentielle logique que le programme doit exécuter pour obtenir un résultat déterminé. Réf. 4404

payload 1. *General*: That part of a load intended for direct mission achievement. 2. *In a missile or rocket*: That what is carried in a warhead compartment. 3. *In a projectile*: The explosive or other filler. (MIL-STD-444) [cargo] See also AAP-6.	**charge utile** 1. *En général*: Partie du chargement destinée à l'accomplissement direct de la mission. 2. *Dans un missile ou une roquette*: Charge portée dans un compartiment de tête. 3. *Dans un projectile*: Chargement explosif ou autre. (MIL-STD-444) [charge cargo] Voir aussi l'AAP-6.
peak pulse power density *Electromagnetic tests:* The peak value of the intensity of a pulse of electromagnetic radiation expressed in watts per square metre ($W \cdot m^{-2}$). Ref: 4234.	**densité de puissance crête d'une impulsion** *Essais électromagnétiques*: Valeur crête du pic d'intensité d'un rayonnement électromagnétique exprimée en Watt par mètre carré ($W \cdot m^{-2}$). Réf: 4234.
peak rate of rise *Lightning:* See STANAGs 4236 and 4327.	**taux de variation crête** *Foudre:* Voir les STANAG 4236 et 4327.
peak stress point *Testing explosive materials*: See STANAG 4443.	**..** *Essais matières explosives*: Voir STANAG 4443.
peer review The independent investigation and evaluation of a program, design, test plan or other technical document, by external specialists having experience in a similar field. Ref. 4404.	**revue de programme** Examen et évaluation d'un programme, une conception, un plan d'essais ou d'un autre document technique, par des spécialistes qui ont une expérience dans un domaine similaire. Réf. 4404.
performance The quantitative expression of the operational characteristics such as range, accuracy, function time, or effect on target.	**performance** Expression quantitative des caractéristiques opérationnelles telles que portée, précision, durée de fonctionnement et effet sur la cible.
permissible maximum pressure (PMP) 1. *Gun projectiles and mortar bombs*, **projectile PMP**: The maximum pressure which for reasons of safety, the projectile may be subjected to. Normally a projectile will be capable of withstanding Cannon (Mortar) PMP. It is only when a projectile is limited to some lower pressure that a projectile PMP will be significant. 2. *Gun cannons and mortars*: **cannon (mortar) PMP**: The pressure at each point in a cannon (mortar) which, for reasons of safety, should not be exceeded. The PMP values are to be specified by the developer. See also STANAG 4110. Former designation: permissible individual maximum pressure (PIMP). Ref: 4224, 4225, 4110.	**pression maximale permise (PMP)** 1. *Obus de canon et de mortier*: La **PMP du projectile** est la pression à laquelle, pour des raisons de sécurité, le projectile pourra être soumis. Normalement, un projectile peut résister à la du canon ou du mortier. La du projectile n'a de signification que lorsqu'il a fallu limiter le projectile à une pression inférieure. 2. *Canons et mortiers*: la **PMP du canon (mortier)** est la pression en chaque point du qui, pour des raisons de sécurité, ne doit pas être dépassée. Le constructeur doit spécifier les valeurs des PMP. Voir aussi STANAG 4110. Ancienne appellation: pression maximale permise individuelle (PIMP). Réf: 4224, 4225, 4110.
photocatalytic neutralization *Disposal:* The use of a light emitting source to render an energetic material inactive or ineffective. Ref: 4518.	**neutralisation photocatalitique** *Mise au rebut :* Utilisation d'une source émettant de la lumière pour rendre une matière énergétique inactive ou inefficace. Réf: 4518.

pin-to-case mode (PTC mode) *Electrical tests*: This mode may be either: Σ the abnormal manner in which an electro-explosive device will function where discharge occurs between one pin and the case of a two pin electro-explosive device via the explosive filling, or Σ the normal manner in which an electro-explosive device will function where the firing current or discharge flows between the pin and the metal surrounding a single-pin electro-explosive device via the explosive filling. Ref: 4324, 4416.	**mode broche à boîtier** *Essais électriques*: Ce mode peut être : Σ une manière anormale de fonctionnement d'un dispositif électro-pyrotechnique à 2 broches où une décharge intervient entre une broche et le boîtier via le chargement explosif, ou Σ une manière normale de fonctionnement d'un dispositif électro-pyrotechnique du type coaxial : le courant ou la décharge de mise à feu passe entre la broche et le boîtier métallique du dispositif électro-pyrotechnique via le chargement explosif. Réf: 4324, 4416.
pin-to-pin mode (PTP mode) *Electrical tests*: The normal manner in which the electro-explosive device will operate with the firing current or discharge flowing through the two connections in the body of the electro-explosive device. Ref: 4324, 4416.	**mode broche à broche** *Essais électriques*: Mode normal du fonctionnement du dispositif électro-pyrotechnique lorsqu' un courant ou une décharge de mise à feu est appliqué aux deux broches du dispositif électro-pyrotechnique. Réf: 4324, 4416.
plastic explosive Explosive which is malleable at normal temperatures. (AAP-6, AAP-19) Ref: AOP-31.	**explosif plastique** Explosif malléable aux températures normales d'utilisation. (AAP-6, AAP-19) Réf: AOP-31.
platform *Weapon system:* The sub-structure of the weapon needed for its firing. [carrier]	**plate-forme** *Système d'arme:* La partie du système nécessaire pour le fonctionnement de l'arme. [porteur]
point detonating fuze (PD fuze) Fuze located in the nose of a projectile, designed to function as a result of impact. [impact action fuze, direct action fuze] Ref: 4326, AOP-8.	**fusée à percussion (directe)** Fusée située à l'avant du projectile, conçue pour fonctionner par impact. [fusée percutante (AAP-6), fusée à percussion, fusée de contact]. L'AAP-6 n'indique pas la position de la fusée sur l'obus ou la bombe. Réf: 4326, AOP-8.
practice mine 1. *Land mines*: Replica of a standard mine, having the same features and weight as the mine it represents. It is constructed to emit a puff of smoke and/or make a noise to simulate detonation. (AAP-6) 2. *Sea mines:* An inert-filled mine but complete with assembly, suitable for instruction and for practice in preparation. (AAP/6) [drill mine]	**mine d'instruction** 1. *Mines terrestres*: Reproduction d'une mine d'un modèle en service, ayant le même aspect et le même poids et construite pour émettre une fumée et/ou un bruit simulant l'explosion.(AAP-6) 1. *Mines navales*: Mine à charge inerte, mais possédant son système de mise de feu, utilisée pour l'instruction du personnel et son entraînement à la préparation des mines. (AAP-6)
premature: See "premature function".	**prématuré**: Voir "fonctionnement prématuré".

premature function 1. *Munitions:* Complete or partial functioning of a munition payload after launch or emplacement at a moment or place prior to the intended fuze functioning before the intended point of operation of the fuze as foreseen by the time setting, proximity sensor function, pressure rise, etc. 2. *Fuzing systems:* A fuze function before completion of the arming delay. [early burst] Ref. 4157, 4187, AOP-16, AOP-20, AOP-31.	**fonctionnement prématuré** *1.* *Munitions :* Fonctionnement partiel ou complet de la charge utile d'une munition après tir, à un temps ou à une distance réduits par rapport aux paramètres attendus du fonctionnement de la fusée, en fonction de la durée initialement réglée. du déclenchement du proximètre, de l'accroissement de la pression, etc. *2.* *Systèmes de fusée:* Fonctionnement de la fusée avant l'écoulement du délai d'armement. [éclatement prématuré] Réf: 4157, 4187, AOP-16, AOP-20, AOP-31.
pressure *In propulsion or expelling systems or subsystems*: Pressure generated by the combustion gasses within the combustion chamber. Definitions for cannon and ammunition proof and design pressures are given in STANAG 4110. [chamber pressure]	**pression** *Dans les systèmes ou sous-systèmes de propulsion ou d'expulsion*: Pression produite par les gaz de combustion dans la chambre de combustion. Des définitions pour les pressions d'essais et de conception des canons et munitions de tir sont données dans STANAG 4110. [pression de chambre]
pressure mine (1) *Land mines:* A mine whose firing system responds to the direct pressure of a target. See also AAP-6.	**mine à pression** *Mines terrestres*: Mine dont le système de mise de feu fonctionne par la pression exercée directement par un objectif. Voir aussi AAP-6.
pressure mine (2) *Sea mines:* A mine whose firing system responds to the hydrodynamic pressure field of a target. See also AAP-6.	**mine à dépression** *Mines navales*: Mine dont la mise de feu est sensible à la dépression hydrodynamique provoquée par le passage d'un objectif. (AAP/6)
primary cartridge *Mortar munition:* Cartridge comprising a primer and a primary charge. In the case of mortar munitions with no augmenting cartridge, the primary cartridge will itself act as the propelling charge. The primary cartridge can be a single or multiple component item, all located inside the tail tube. [primary charge] Ref : 4433.	**cartouche** (2) *Munitions de mortier*: Cartouche comprenant une amorce et une charge primaire. Dans le cas de munitions de mortier sans relais, la cartouche joue à elle seule le rôle de charge propulsive. La cartouche peut être constituée d'un seul ou de plusieurs éléments, ceux-ci situés dans le tube de l'empennage. [cartouche primaire*, charge primaire] Réf : 4433.
primary charge The intermediate explosive used to augment the impulse from the primer to a magnitude sufficient to ignite the following element of the explosive train. In some cases it may be the final element of the explosive train.	**charge primaire** Charge intermédiaire utilisée pour renforcer l'impulsion de l'amorce à un niveau assez élevé pour initier l'élément suivant de la chaîne pyrotechnique. Parfois elle peut être l'élément finale de la chaîne pyrotechnique.

primary explosive Substance, or mixture of substances, used to initiate a detonation or a burning reaction. In their intended role these materials are sensitive to a range of thermal, mechanical and electrical stimuli. 1. Primary explosives are materials sensitive to heat, impact, or friction, electricity, etc., used in initial or intermediary charges in devices such as primers, detonators, caps, relays, electric matches, etc. They undergo a rapid reaction upon initiation. 2. To determine the conditions under which the explosive is to be used upstream or downstream of a barrier (interrupter), see also STANAG 4170. 3. Examples are: lead azide, lead styphnate [secondary explosives] Ref: 4157, 4170, 4187, AOP-7, AOP-26, AOP-20.	**explosif primaire** Matière ou mélange de matières utilisé pour initier une détonation ou une combustion. Dans leur usage générique, ces matières sont sensibles à différentes sollicitations thermiques, mécaniques et électriques. 1. Les explosifs primaires sont des matières sensibles à la chaleur, à l'impact, à la friction et à l'électricité, et utilisés dans des charges d'amorçage ou des relais dans des dispositifs tels que détonateurs, amorces, relais, allumettes électriques, etc. Après amorçage, ils subissent une réaction rapide. 2. Pour déterminer les conditions d'emploi d'un explosif (en amont ou en aval d'une barrière), voir aussi STANAG 4170. 3. Exemples : l'azoture de plomb, le styphnate de plomb. [explosifs secondaires] Réf: 4157, 4170, 4187, AOP-7, AOP-26, AOP-20.
primer Cap containing a primary explosive and a booster. Its function consists of transforming an external action, normally mechanical or electrical, in sufficient explosive energy to ignite the primary charge. In a gun cartridge, the primer is the explosive device containing a cap and a booster charge or pyrotechnic which is used to ignite the propellant charge (OB). [cap, initiator. US term: primer, artillery]	**amorce** Alvéole comprenant une composition pyrotechnique d'amorçage. Son rôle consiste à transformer une action externe (mécanique, électrique, ...) en une énergie suffisante pour initier la charge primaire. "Étoupille": composant pyrotechnique constitué d'un initiateur ou d'une amorce et d'une charge pyrotechnique secondaire. (GTPS). Dans une cartouche, elle est le dispositif d'allumage de la charge propulsive. [étoupille, initiateur]
primer -	**étoupille**: Voir "amorce".
production build standard Materiel produced in accordance with the specifications for service use. Production build standard materiel is materiel, produced in accordance with: a. a defined and approved design; b. a defined and approved production process; c. the quality control and acceptance requirements. Materiel of a same design may be produced in accordance with different validated production definitions (product processing, tooling, quality control) if these are be unambiguously defined. [end item specification]	**produit de fabrication courante** Matériel réalisé conformément à son dossier de définition pour l'utilisation en service. Un matériel, produit de fabrication courante est fabriqué suivant: a. une conception définie et approuvée (conception arrêtée); b. un processus de fabrication définie et approuvée; et c. les exigences d'assurance qualité et les conditions d'acceptation. Matériel d'une même conception peut être fabriqué suivant des définitions de productions (traitement des produits, outillage, assurance qualité) validées mais différentes, pourvu qu'elles soient définies de façon unique.
projectile An object, projected by an applied exterior force and continuing in motion by virtue of its own inertia, as a bullet, shell or grenade. (AAP-6)	**projectile** Corps projeté par application d'une force extérieure et qui poursuit sa trajectoire par son inertie propre, comme balle, obus ou grenade. (AAP-6)

projectile lower firing temperature upper proof pressure (Projectile LFTUPP) A chamber pressure band at which projectile safety tests at the lower firing temperature (LFT) are carried out. This pressure band is normally between 3 sd and 4.75 sd above the adjusted mean pressure at the LFT. Ref: 4110, 4224.	**pression supérieure d'épreuve du projectile à la température inférieure de tir** Gamme de pressions de chambre à laquelle sont effectués les essais de sécurité du projectile à la température inférieure de tir. Cette gamme de pressions est normalement comprise entre 3 et 4,75 écarts type (sd) au-dessus de la pression moyenne ajustée à la température inférieure de tir. Réf: 4110, 4224.
projectile upper firing temperature upper proof pressure (Projectile UFTUPP) The band of chamber pressure between maximum operating pressure (MOP) and extreme maximum operating pressure (EMOP) at which projectile safety tests at the upper firing temperature (UFT) are carried out. Ref: 4110, 4224.	**pression supérieure d'épreuve du projectile à la température supérieure de tir** Gamme de pressions de chambre entre la pression maximale en fonctionnement (PMF) et la pression extrême maximale en fonctionnement à laquelle sont effectués les essais de sécurité du projectile à la température supérieure de tir. Réf: 4110, 4224.
proof pressure (PP): See STANAG 4110.	**pression d'épreuve**: Voir STANAG 4110.
propellant Substance or mixture of substances used for propelling projectiles and missiles, or to generate gases for powering auxiliary devices. When ignited, propellants burn or deflagrate to produce quantities of gas capable of performing work, but in their application are required not to undergo a deflagration-to-detonation transition. Ref: AOP-7, AOP-26.	**propergol** Substance ou composition de substances servant à propulser des projectiles et des missiles, ou à dégager des gaz pour faire fonctionner des dispositifs auxiliaires. Lors de la mise à feu, les propergols brûlent ou déflagrent afin de produire des gaz en quantité suffisante pour effectuer le travail, mais leur emploi exige que la déflagration ne se transforme pas en détonation. Le terme "propergol" est utilisé dans l'application d'autopropulsion et le terme "poudre" pour les armes à tir. Réf: AOP-7, AOP-26.
propellant -	**poudre**: Voir "propergol".
propulsion 1. Action to cause a projectile to move. 2. *IM assessment:* A reaction whereby sufficient force is produced to impart flight to the test item. Ref: AOP-39.	**propulsion** 1. Action qui consiste à créer le mouvement du projectile. (GTPS) 2. *Évaluation MURAT*: Réaction qui produit une force suffisante pour projeter le spécimen d'essai. Réf: AOP-39.
proximity fuze (PROX) A fuze wherein initiation occurs by detecting the presence and/or the position of a target by means of a signal emitted by the fuze or by the target. Ref: 4326, AOP-8. See also AAP-6.	**fusée de proximité (PROX)** Fusée où l'initiation intervient par détection de la présence et/ou la position d'une cible au moyen d'un signal émis par la fusée ou par la cible. Réf: 4326, AOP-8. Voir aussi AAP-6.
pulse energy density *Electric environment:* The energy contained within a pulse of radiation expressed as Joules per square metre ($J \cdot m^{-2}$). Ref: 4234.	**densité d'énergie d'une impulsion** *Environnement électrique:* Energie contenue dans une impulsion de rayonnement, exprimée en Joule par mètre carré ($J \cdot m^{-2}$). Réf: 4234.

pyroshock A severe mechanical transient in a structure caused by an explosive event. The transient consists of high frequency high-magnitude stress waves. Near field pyroshock: frequencies up to 10 kHz and higher. Far field pyroshock: frequencies up to 10 kHz. A pyroshock is not necessarily associated with a pyrotechnic event.	**choc pyrotechnique** Sévère choc mécanique transitoire, passant dans une structure, occasionné par un événement explosif. Le choc consiste en ondes de haute fréquence et grande amplitude. Choc pyrotechnique à courte distance: fréquences jusqu'à 10 kHz et plus. Choc pyrotechnique à distance: fréquences jusqu'à 10 kHz. Un choc pyrotechnique n'est pas nécessairement associé avec un événement pyrotechnique.
pyrotechnic composition Substance or mixture of substances which when ignited, undergo an energetic chemical reaction at a controlled rate intended to produce on demand and in various combinations, specific time delays or quantities of heat, noise, smoke, light, or infrared radiation. Pyrotechnic compositions may be used to initiate burning reactions such as in igniters. 1. Less complete definition in AAP-6 and AAP-19. 2. Pyrotechnics, in most of their applications, are required not to undergo a deflagration-to-detonation transition. 3. The term excludes propellants and (high) explosives. Ref: AOP-7, AOP-26 , STANAG 4170.	**composition pyrotechnique** Matière ou mélange de matières qui, lorsqu'elle est initiée, subit une réaction chimique énergétique à une vitesse contrôlée, destinée à produire à la demande et selon diverses combinaisons des retards spécifiques ou des quantités de chaleur, de bruit, de fumée, de lumière ou des radiations infrarouges. Les compositions pyrotechniques peuvent être utilisées pour initier les réactions de combustion dans les systèmes d'allumage. 1. Définition moins complète dans l'AAP-6 et l'AAP-19. 2. Dans la plupart des cas, l'emploi des compositions pyrotechniques exige que la déflagration ne se transforme pas en détonation. 3. Le terme exclut les propergols et les explosifs. Réf: AOP-7, AOP-26 , STANAG 4170.
pyrotechnic delay A pyrotechnic device added to a firing system which transmits the ignition flame after a predetermined delay. (AAP– 6)	**retard pyrotechnique** (2) Composition pyrotechnique intercalée dans un dispositif d'amorçage et destinée à transmettre la flamme avec un retard prédéterminé. (AAP-6)
pyrotechnic train An explosive train beginning with the igniter and terminating in a pyrotechnic or propulsive main charge. [ignition train*, explosive train]	**chaîne d'allumage** (2) Chaîne pyrotechnique commençant par un allumeur et se terminant par une charge principale déflagrante ou propulsive. [chaîne pyrotechnique]
qualification (1) *Weapon system, munition or munition component:* Assessment and statement by accredited authority that the subject materiel possesses and will maintain the properties which are acceptable with regard to safety and suitability for service in a specified role, a specified environment, during its specified life cycle, and that the associated risks are acceptable. Qualification of a munition includes all configurations and situations, likely to exist during its life cycle. [type qualification*, assessment, characterization]	**qualification** *Système d'arme, munition ou composant de munition:* Évaluation et déclaration par l'autorité accréditée, que le matériel en question possède et conservera pendant son cycle de vie les caractéristiques acceptables du point de vue de la sécurité et l'aptitude au service dans un rôle et un environnement spécifiés, pendant son cycle de vie spécifiés, et que les risques associés soient acceptables. La qualification d'une munition comprend donc toutes les configurations et situations, qui se présenteront probablement pendant son cycle de vie. [qualification de type*, évaluation, caractérisation]

qualification (2). *Explosive materials*: The assessment of an explosive material by the accredited authority to determine whether it possesses properties which make it safe and suitable for consideration for use in its intended role. [qualified explosive material, final or type qualification] Ref: 4170 and AOP-7, 4397 and AOP-26.	**homologation** *Matières explosives:* Évaluation par l'autorité accréditée pour déterminer si elle possède les propretés de sécurité et d'aptitude à l'emploi dans son usage générique. [matière explosive homologuée, homologation finale ou type] Réf: 4170 et AOP-7 4397 et AOP-26.
qualified explosive material An explosive material which has successfully completed the qualification process of an accredited authority. This is an intermediate risk reduction stage prior to final (or type) qualification. [final (or type) qualified explosive] Ref: AOP-7, AOP-26.	**matière explosive homologuée** Matière explosive qui a subi entièrement avec succès le processus de homologation de l'autorité accréditée. Il s'agit là d'une étape intermédiaire de diminution de risques avant l'homologation finale. [homologation finale (ou type)] Réf: AOP-7, AOP-26.
radio and radar radiation hazards (RADHAZ) The risk of inadvertent ignition of electro-explosive devices and inflammables, injury to personnel or malfunction of safety critical electronic systems resulting from exposure to electromagnetic radiation environment in the frequency range emitted by radio and radar installations. Ref:1307, 4234.	**dangers des rayonnements radio-radar** Risque d'initier impestivement des dispositifs électro-pyrotechnique et des produits inflammables ou de blesser le personnel ou d'occasionner de mauvais fonctionnements des systèmes électroniques critiques du point de vue de la sécurité, dû à une exposition à un environnement électromagnétique dans la plage de fréquence émises par les équipements radio et radar. Réf:1307, 4234.
rate of fire The number of rounds fired per weapon per minute or per second. [firing rate*, firing interval] See also AAP-6.	**cadence de tir** Nombre de coups tiré par une arme en une minute ou en une seconde. [intervalle de tir] Voir aussi AAP-6.
reactivation capability A capability which will cause a fuzing system, having been deactivated, to return to a state in which it is again capable of reacting to a firing signal. Ref: 4187, AOP-31.	**capacité de réactivation** Capacité conférée à un système de fusée, qui, désactivé, pourrait revenir dans un état qui lui permet de réagir à un signal de mise à feu. Réf: 4187, AOP-31.
reattachment *Lightning:* See STANAGs 4236 and 4327.	**réattachement** *Foudre*: Voir les STANAG 4236 et 4327.
recovery *Demilitarization of munitions*: The process of extracting serviceable and economically repairable components and material from excess or surplus munitions. Ref: 4518.	**récupération** *Démilitarisation de munitions*: Extraction de composants et de matériaux utiles ou économiquement réparables d'une munition de surplus. Réf: 4518.
recycling *Demilitarization of munitions*: The use in a different item of materials recovered from a munition. Ref: 4518.	**recyclage** *Démilitarisation de munitions*: Utilisation des composants récupérés sur une munition dans un article différent. Réf: 4518.
relay : See "lead".	**relais** : Voir "lead / relais (1)".

relay box *Demolition systems:* Device converting the output from the receiver into a pulse to initiate (a) demolition charge(s) either sequentially or concurrently. It can be a part of the receiver or linked to it. Ref: AOP-31.	**boîte relais** *Systèmes de destruction:* Dispositif qui convertit l'effet du récepteur en une impulsion destinée à initier une ou plusieurs charges de destruction, consécutivement ou simultanément. Il peut être un composant de récepteur ou être relié avec. Réf: AOP-31.
reliability The ability of an item to perform a required function under stated conditions for a stated period of time or on demand. [suitability for service, dependability, availability, maintainability] Ref: ARMP-1.	**fiabilité** Aptitude d'un article à exécuter une fonction spécifiée dans des conditions déterminées pendant une période de temps donnée ou au moment d'une demande. [aptitude au service, sûreté de fonctionnement, disponibilité, maintenabilité] Réf. ARMP-1.
render safe 1. *Use of munition:* To bring an armed munition to a non-armed condition. Ref: 4187. 2. *Munitions design*: To prevent inadvertent explosive functioning through the application of special interruption or separation techniques and tools. Ref: 4497.	**mise en position de sécurité** 1. *Utilisation d'une munition:* Action sur une munition armée pour la placer dans un état non armé. Réf: 4187. 2. *Conception de munition:* Application de techniques et de dispositifs particuliers d'interruption ou de séparation pour éviter un fonctionnement explosif intempestif. Réf: 4497.
response *Munition testing*: An observed reaction of a test specimen to the imparted stimulus, for example, fracture, detonation, deformation, penetration, arming, etc. The absence of an observed reaction is referred to as a nonresponse. *(AOP-20, §D2.7.11).* See also "munition response". Ref. AOP-20.	**réponse** *Essais munitions:* Réaction observée d'un spécimen d'essai à un niveau de stimulus appliqué, par exemple fracture, détonation, déformation, pénétration, armement, etc. En absence d'observation de réaction, on parle de non-réponse. Voir aussi "réponse de la munition". Réf. AOP-20
response descriptors Classification of reactions resulting from unwanted initiation of a munition, based on the effects on the environment of the munition. The types of reactions are: propulsion and response type I, II, III, IV and V. These response descriptors describe the effects from a munition on its environment. [munition response*] Ref: 4439, AOP-39.	**réactions types** Classification des réactions qui résultent de l'initiation non désirée d'une munition, basée sur les effets sur l'environnement de la munition. Les types de réaction sont: projection et réactions de type I, II, III, IV et V. Ces réactions types décrivent les effets d'une munition sur l'environnement. [réponse de la munition*]. Réf: 4439, AOP-39.
restrike *Lightning:* See STANAGs 4236 and 4327.	**décharge secondaire** *Foudre*: Voir les STANAG 4236 et 4327.
reuse *Demilitarization of munitions*: The alternative use of a munition or its components, e.g., change from operational to training use. Ref: 4518.	**réutilisation** *Démilitarisation de munitions*: Utilisation alternative d'une munition ou de ses composants, par exemple passer de l'opérationnel à l'entraînement. Réf: 4518.

reversible failure Failure of a materiel caused under specified environmental conditions, and the materiel returns to normal functional and safety conditions when these conditions cease. [irreversible failure]	**défaillance réversible** Défaillance d'un matériel, provoquée dans des conditions d'environnement spécifiées, suivi d'un retour du matériel au conditions de fonctionnement et de sécurité normales lorsque ces conditions ont cessées d'exister. [défaillance irréversible]
rifle launched grenade A munition designed to be projected from a service rifle. [rifle grenade*] Ref: 4520.	**grenade à fusil** Munition destinée à être lancée par un fusil de guerre. Réf: 4520.
ring set fuze A time fuze where the ogive or part connected to the timing release mechanism rotates about the stationary body. Ref: 2916.	**fusée à anneau** Fusée à temps dans laquelle l'ogive ou la partie reliée au mécanisme de réglage du temps tourne autour du corps fixe. Réf: 2916.
rising mine *Sea mines:* In naval mine warfare, a mine having positive buoyancy which is released from a sinker by a ship influence or by a timing device. The mine may fire by contact, hydrostatic pressure or other means. (AAP/6)	**mine à flotteur largable** Mines navales: Mine de flottabilité positive, libérée de son crapaud à la réception d'une influence convenable, provenant d'un bâtiment ou par un dispositif chronométrique. La mine peut exploser au contact, par dispositif hydrostatique ou par autre procédé. (AAP/6)
risk The combination of the frequency, or probability, and the consequences of a mishap. [hazard, threat, mishap, accident] Ref : AOP-15, MIL-STD-882.	**risque** Ensemble de la fréquence ou la probabilité, et des conséquences d'un accident. [danger, menace, accident] Réf : AOP-15, MIL-STD-882.
risk analysis The systematic use of available information to identify hazards and to estimate the risk to individuals or populations, property or the environment. (IEC) [hazard analysis]	**analyse de risque** Exploration systématique de l'information disponible pour identifier les dangers et pour estimer le risque pour personnes ou populations, propriétés ou l'environnement. [analyse des dangers]
risk assessment The overall process of risk analysis and risk evaluation. (IEC) [risk evaluation]	**évaluation des risques** (1) Ensemble du processus d'analyse de risque et d'évaluation de risque. (IEC, traduction provisoire) [évaluation des risques (2)]
risk control Process, the purpose of which is to determine the status of each individual risk throughout a programme. The principal activities involved in this process are the drafting of specifications, and risk identification, assessment, reduction and acceptance.	**maîtrise des risques** Processus dont le but est de connaître l'état de chaque risque individuel tout au long d'un programme. Les grandes activités de ces processus sont l'établissement des spécifications, l'identification et l'évaluation de risques, leur réduction et leur acceptation.

risk estimation The process used to produce a measure of the level of risk being analysed. Risk estimation consists of the following: frequency analysis, consequence analysis and their integration. (IEC)	**estimation du risque** Processus appliqué pour produire une mesure du niveau du risque en cours d'analyse. L'estimation du risque comprend : les analyses de la fréquence, des conséquences et de leur intégration. (IEC, traduction provisoire)
risk evaluation The process in which judgements are made on the tolerability of the risk on the basis of risk analysis and taking into account factors such as socio-economic and environmental aspects (IEC) [risk assessment]	**évaluation des risques** (2) Processus dans lequel l'on juge la tolérabilité du risque, basé sur l'analyse du risque et prenant en compte des facteurs tels que les aspects socio-économiques et d'environnement. (IEC, traduction provisoire) [évaluation des risques (1)]
risk management The systematic application of management policies, procedures and practices to the tasks of analysing, evaluating and controlling risks (IEC)	**gestion des risques** Application systématique de la politique de gestion, des procédures et des pratiques aux tâches concernant l'analyse, l'évaluatio9n et la maîtrise des risques. (IEC, traduction provisoire)
rocket Self-propelled, unguided projectile. [missile, projectile]	**roquette** Projectile autopropulsée non guidée. [missile, fusée, projectile]
rocket assisted projectile A projectile which has been modified with a post launch boost to achieve greater range.	**projectile à propulsion additionnelle** Projectile muni d'une poussée supplémentaire pour en augmenter la portée.
rocket propellant Substance or mixture of substances, which is required to burn in a controlled manner within a rocket motor producing hot gases which are vented through a nozzle to propel the munition. Ref: 4170.	**propergol pour roquette** Matière ou mélange de matières qui doivent brûler de façon contrôlée à l'intérieur d'un propulseur en produisant des gaz chauds qui sont éjectés à travers une tuyère pour propulser la munition. Réf: 4170.
round All the parts that make up the ammunition necessary in firing one shot. [complete round*, cartridge]	**coup complet** Ensemble des parties qui constituent une munition et sont nécessaires pour tirer un coup. [cartouche]
sabot Lightweight carrier in which a subcalibre projectile is centred to permit firing the projectile in the larger calibre weapon. The carrier fills the bore of the weapon from which the projectile is fired; it is normally discarded a short distance from the muzzle. (AAP – 6)	**sabot** Support léger dans lequel un projectile d'un calibre plus petit est centré pour permettre le tir du projectile dans une arme de calibre plus grand. Le support obture l'âme de l'arme d'où le projectile est tiré. Il est normalement rejeté à une courte distance de la bouche du canon. (AAP – 6)
safe : See "safety".	**état de sécurité** : Voir "sécurité".

safe fatigue life *Cannon:* The limit which should not be exceeded in service on the working life of an item where the probability of catastrophic failure is no longer acceptable. The fatigue life is normally derived from a test to destruction of a number of barrels or other components and application of a statistical analysis. [wear life, service life] Ref. 4516.	**durée de vie en fatigue du point de vue de la sécurité** La limite qui ne devrait pas être dépassée en service durant la durée de vie fonctionnelle d'un élément, lorsque la probabilité d'une défaillance catastrophique due à la fatigue n'est plus acceptable. La durée de vie est normalement déterminée à partir d'un essai allant jusqu'à la destruction d'un certain nombre de tubes ou d'autres composants, et l'application d'une analyse statistique. [durée de vie en usure, durée de vie en service] Réf. 4516.
safe jettison Deliberate release or ejection of a non-armed munition in a manner which ensures that arming cannot occur. Ref: 4187, 4333, 4432, 4433.	**largage de détresse en condition de sécurité** Largage ou éjection délibéré d'une munition non armée, de façon que l'armement ne soit pas possible. Réf: 4187, 4333, 4432, 4433.
safe jettison test A test to verify if the jettison of a munition from its platform can be executed under safe conditions. Ref: 4333, 4432. [safe jettison]	**essai de largage** Essai consistant à vérifier que le largage d'une munition depuis sa plate-forme puisse s'effectuer en sécurité. Réf: 4333, 4432. [largage de détresse]
safe separation The places or area where the risks to personnel and materiel are acceptable, with regard to the intentional or accidental function of a weapon or a munition, and the protection provided. Safe separation may be achieved by means of sufficient distance to the explosion point, screens, shelters. [safe separation distance, danger area]	**séparation en sécurité** Endroits ou aire où les risques pour le personnel et le matériel sont acceptables, par rapport au fonctionnement projeté ou intempestif d'une arme ou de munition, et à la protection disponible. La séparation en sécurité peut être obtenue par une distance suffisante du point d'explosion, des écrans, des abris. [distance de sécurité, zone dangereuse]
safe separation distance *Launched or released munition:* A minimum distance between the delivery system or launcher and the armed munition beyond which the risks of functioning of the munition to personnel and the launch platform or delivery system are acceptable. 1. A fuzing system should not be armed within the safety distance. 2. For hand emplaced munitions, see "safe separation". [safe separation]	**distance de sécurité** *Munition propulsée / relâchée:* Distance minimale entre le système de largage ou le lanceur de la munition, et la munition armée, au delà de laquelle des risques associés à la munition sont acceptables. 1. Un système de fusée ne devrait être armé qu'au delà de la distance de sécurité. 2. Pour les munition à positionnement manuel, voir "séparation en sécurité". [séparation en sécurité]

safety *Situation:* An acceptable level of freedom from risks to personnel and material at all times recognizing. *Materiel:* The inherent property of a system, subsystem or item that enables it to possess and to maintain an acceptable level of risk during all situations and activities occurring during its specified life cycle. Safety state is the situation wherein the overall risks are acceptable. [system safety, weapon safety, hazard, risk, danger] Ref : AOP-15, MIL-STD 882.	**sécurité** *Situation*: Niveau acceptable d'absence de risques pour le personnel et le matériel à tout moment. *Matériel* : Propriété d'un système, sous-système ou article qui le permet de posséder et de maintenir un niveau de risque acceptable pendant touts les situations et activités qui surviennent pendant son cycle de vie spécifié/ L'état de sécurité est la situation dans laquelle l'ensemble des risques est acceptable. [sécurité système. sécurité arme, risque, danger] Réf : AOP-15, MIL-STD 882.
safety analysis: See "hazard analysis".	**analyse de sécurité**: Voir "analyse de risque".
safety and arming device (SAD) A device that prevents a fuzing system from arming until an acceptable set of conditions has been achieved and subsequently effects arming and allows functioning of the payload. [safety and arming unit*, safety and arming mechanism *] Ref: 4187.	**dispositif de sécurité et d'armement (DSA)** Dispositif empêchant un système de fusée de s'armer jusqu'à ce qu'un ensemble acceptable de conditions soient atteintes, effectuant subséquemment l'armement et permettant le fonctionnement de la charge utile. [mécanisme de sécurité et d'armement *] Réf: 4187.
safety and arming unit (SAU): See "safety and arming device".	**dispositif de sécurité et d'armement (DSA)** -
safety and suitability for service (S3) A general term used to summarize the requirements for a munition to be acceptably free from hazards and to have inherent characteristics that meet specified requirements during its agreed life cycle. It does not include operational effectiveness. [safety, reliability] Ref: AOP-15.	**sécurité et aptitude au service** Terme général couvrant les exigences imposées à une munition pour présenter un niveau de risques acceptable et posséder des caractéristiques inhérents aux exigences spécifiées pour le cycle de vie convenu. Il ne comprend pas l'efficacité opérationnelle. [sécurité, fiabilité] Réf: AOP-15.
safety barrier Materiel or procedure designed to interrupt or modify a feared potential event, in order to reduce the probability or gravity of the event.	**barrière de sécurité** *Matériel* ou procédure destiné à interrompre ou modifier un événement redouté, de façon à en réduire la probabilité ou la gravité.
safety critical Characterization of a condition, event, function, operation, process, or item of a system whose proper recognition, control, performance, or tolerance is essential to system safety during any phase of its life cycle. Examples are: safety critical function, safety critical path, safety critical component. [critical characteristic, critical defect] Ref: AOP-15, 4404, MIL-STD 882.	**critique du point de vue de la sécurité** Caractérisation d'une ***c***ondition, un événement, une opération, un processus ou un élément du système dont la reconnaissance, la maîtrise, la performance ou la tolérance correcte est essentielle pour la sécurité du système pendant toutes les phases de son cycle de vie. Exemples: fonction, chemin ou composant critique du point de vue de la sécurité. [caractéristique critique, défaut critique] Réf: AOP-15, 4404, MIL-STD-882.

safety critical computing system (SCCS) A computing system containing at least one safety critical function. [safety critical function, safety critical system]. Ref: 4187, 4404.	**système informatisé critique du point de vue de la sécurité** Système informatisé qui comprend au moins une fonction critique du point de vue de la sécurité. [fonction critique du point de vue de la sécurité, système critique du point de vue de la sécurité] Réf: 4187, 4404.
safety critical function A function in which an failure will result in a potential unacceptable risk to the user, friendly forces, the system, other materiel, third parties or the environment. Ref: 4404.	**fonction critique du point de vue de la sécurité** Fonction dont une défaillance amènera un risque potentiel inacceptable pour l'utilisateur, les forces amies, le système, autre matériel, les tiers ou l'environnement. Réf: 4404.
safety critical system A system in which a failure will result in a potential unacceptable risk to the user, friendly forces, the system, other materiel, third parties or the environment. [safety critical function, critical item, safety system] Ref: 4234, 4324.	**système critique du point de vue de la sécurité** Système dans lequel une défaillance amènera un risque potentiel inacceptable pour l'utilisateur, les forces amies, le système, autre matériel, les tiers ou l'environnement. [système de sécurité] Réf: 4234, 4324.
safety device : See "safety feature".	**dispositif de sécurité** -
safety distance: See "safe separation distance" .	**distance de sécurité** -
safety failure: See STANAG 4497.	**défaillance de la sécurité**: Voir STANAG 4497.
safety feature 1. *General*: Device to reduce weapon system or munitions risks. (AAP-19) 2. *Fuzing system*: An element or combination of elements designed to prevent unintended arming and functioning. Ref: 4187, 4497, AOP-20, AOP-31. [safety device*]	**dispositif de sécurité** 1. *En général*: Dispositif destiné à réduire les risques du système d'arme et de la munition. (AAP-19) 2. *Système de fusée*: Élément ou combinaison d'éléments destiné à prévenir l'armement et le fonctionnement accidentel. Réf: 4187, 4497, AOP-20, AOP-31.
safety fuze A pyrotechnic contained in a flexible and weather-proof sheath which will burn at a timed and constant rate, used to transmit a flame to the detonator. [US: fuse, blasting, time] Ref: AOP-31, AAP-6, AAP-19	**mèche lente** Cordon de poudre contenue dans une gaine souple et étanche, qui brûlera à une vitesse lente et constante et servant à transmettre une flamme à un détonateur avec un retard. Réf: AOP-31, AAP-6, AAP-19.
safety kernel *Computer systems:* An independent computer program that monitors the state of the system to determine when potentially unsafe system states may occur or when transitions to potentially unsafe systems may occur. The safety kernel is designed to prevent the system from entering the unsafe state and return it to a known safe state. Ref: 4404.	**programme interne de sécurité** *Systèmes informatiques:* Programme informatique indépendant qui surveille l'état du système afin de détecter l'apparition d'éventuels états de risque du système ou des transitions vers de tels états. Ce programme est conçu pour empêcher le système d'entrer dans un état de risque et pour le ramener dans un état de sécurité connu. [noyau dur] Réf: 4404.

safety margin 1. *General:* The maximum range of the physical, chemical, and electrical characteristics beyond which the safety and/or the suitability are compromised, taking into account the interfaces of the item and the life cycle profile. Ref: 4324. 2. *Mechanical strength*: The minimum difference between load on an item and strength of the item. If the difference is smaller, safety will be compromised. 3. *Mortars*: The difference between the mortar safe maximum pressure (SMP) curve and the mortar design pressure (DP) curve at any point along the barrel. Ref: 4225. [margin of safety]	**marge de sécurité** 1. *En général*:: L'étendue des caractéristiques physiques, chimiques et électriques, au-delà de laquelle la sécurité et/ou l'aptitude sont compromises, tenant compte des interfaces de l'article et du cycle de vie. Réf: 4324. 2. *Résistance mécanique*: La différence minimale entre la charge sur un article et la résistance de l'article. Si la différence est plus petite, la sécurité sera compromise. 3. *Mortiers*: Différence entre les courbes de pression maximale de sécurité et de pression nominale tout le long du tube de mortier. Réf: 4225.
safety system The aggregate of safety features and devices of a system and the procedures associated with its use that eliminate, control or mitigate risks from the system throughout its life cycle. Ref: 4497.	**système de sécurité** Ensemble de dispositifs et de mécanismes de sécurité d'un système et des procédures associées à son utilisation qui permettent d'éliminer, de maîtriser, d'atténuer les risques du système pendant son cycle de vie. Réf: 4497.
safety template Mapping of an unsafe area. [safe separation, danger area]	**gabarit de sécurité** Plan d'une zone dangereuse. [séparation en sécurité, zone dangereuse]
scuttle *Naval mines*: To flood the mine case. (OB)	**saborder** *Mines navales*: Noyer le flotteur de la mine.
sea skimmer A missile designed to transit at less than 15 metres (50 feet) above the surface of the sea. (AAP– 6)	**missile à trajectoire rasante** Missile conçu pour survoler la mer à moins de 15 m de la surface. (AAP–6)
secondary explosive A substance or mixture which will detonate when initiated by a shock wave but which normally does not detonate when heated or ignited. (OB) (1) As opposed to "primary explosive". (2) The above definition applies essentially to fuzes. For this case, STANAG 4170 helps to determine the conditions under which the explosive is to be used (upstream of downstream a barrier, interrupter). [booster explosive, primary explosive]	**explosif secondaire** Matière ou mélange qui détone après amorçage par une onde de choc mais qui normalement ne détone pas après échauffement ou allumage. (1) Par opposition à "explosif primaire". (2) La définition ci-dessus se rapporte essentiellement aux fusées. Dans ce cas le STANAG 4170 aide à déterminer les conditions d'emploi d'un explosif (en amont ou en aval d'une barrière). [explosif de relais, explosif primaire]

secured cargo munition Any munition which is firmly attached to the vehicle structure with or without anti-vibration mounts or isolators, but which will be removed or launched from the vehicle at some stage. The carriage may be of relatively short duration compared with installed munitions. [loose cargo munition, installed munition] Ref: AOP-34.	**munition arrimée** Munition qui est fermement attachée à la structure du véhicule avec ou sans cadres anti-vibrations ou isolateurs, mais qui pourra être désarrimée ou enlevée de son logement. Son transport pourra être d'une durée relativement courte comparée à celle des munitions installées à demeure. [munition non-arrimée, munition installée] Réf: AOP-34.
self destruction Automatic destruction of an explosive charge in a munition that did or will not complete its mission as intended.	**autodestruction** Destruction automatique d'une charge explosive dans une munition qui n'achève ou n'achèvera pas sa mission projetée.
self-guided missile Missile with an autonomous guidance system. [missile, teleguided missile, "fire and forget"]	**missile autoguidé** Missile avec un système guidage autonome. [missile, missile téléguidé]
semi-conductor bridge (SCB) initiator An electro-explosive device containing a bridge which, when subjected to a pulse of electrical energy produces a plasma discharge initiating an explosive with which it is in contact. [electro-explosive device] Ref: 4560.	**dispositif électro-pyrotechnique à pont semi-conducteur** Dispositif électro-pyrotechnique contenant un pont qui, soumis à une impulsion d'énergie électrique, produit une décharge de plasma amorçant une matière avec lequel il est en contact. [dispositif électro-pyrotechnique] Réf: 4560.
sensitiveness *Safety of an explosive or an explosive item:* The probability or a measure of the ease of being initiated by a specified stimulus. Sensitiveness is an inverse measure of the safety of an explosive against accidental initiation, the probability of being initiated by unintended events. For the assessment of the sensitiveness of an explosive or an explosive item, the no-fire threshold is determined. [no-fire threshold, sensitivity]	**sensibilité** (1) *Sécurité d'une matière explosive ou d'un élément explosif:* La probabilité ou la facilité d'être initié par un stimulus spécifié. Dans ce sens, la sensibilité est l'inverse de la résistance prescrit, la probabilité d'initiation due à un événement **non projeté**. Pour l'évaluation d'une matière explosive ou un élément explosif, le seuil de non-feu est déterminé. [réactivité*, seuil de non-mise à feu]
sensitivity *Suitability for service, reliability:* A measure of the stimulus required to cause reliable functioning of an explosive system in the design mode. 1. Sensitivity is the probability of being initiated by an ***intended*** action and a specified stimulus. For the assessment, the all-fire level is determined. 2. The expression of the sensitivity towards these actions depends on the equipment and the procedure (of the test). [sensitiveness, firing level, all-fire level]	**sensibilité** (2) *Aptitude au service, fiabilité:* Mesure du stimulus requis pour provoquer le fonctionnement fiable d'un système explosif dans son mode de conception. 1. Dans ce sens, la sensibilité est la probabilité d'initiation due à un événement ***projeté***. Pour l'évaluation, le seuil de mise à feu est déterminé. 2. L'expression de la sensibilité pour ces actions dépend de l'appareillage et du mode opératoire utilisés. [niveau de mise à feu, seuil de mise à feu]

sensor An equipment that detects, and may indicate, and/or record objects and activities by means of energy or particles emitted, reflected, or modified. (AAP-6) [environmental sensor*] Ref: 4187, AOP-31.	**capteur** Équipement destiné à assurer la détection d'objets ou d'activités et permettant de les représenter ou de les enregistrer grâce à l'énergie ou aux particules qu'ils émettent, réfléchissent ou modifient. (AAP-6) [détecteur d'environnement*, senseur*] Réf: 4187, AOP-31.
service environment The total set of all external natural and induced conditions to which an item or a materiel is expected to be exposed throughout its service life. [environmental profile, life cycle, service life]	**environnement propre au service** Ensemble de toutes les conditions extérieures, d'origine naturelles ou artificielles, auxquelles un article ou un matériel seront vraisemblable-ment soumis pendant toute leur durée de vie de service. [environnement d'exploitation*, profil d'environnement, cycle de vie, durée de vie en service]
service life The time during which materiel, in specified storage conditions and when subsequently used in its specified operational and/or training conditions, may be expected to remain safe and serviceable. 1. Where environmental monitoring equipment is used, the service life will depend on the environmental influences to which the materiel has been exposed. 2. The service life does not include the elimination from service, e.g., disposal. [manufacture to target sequence*, life cycle, storage life, operational life]	**durée de vie en service** Période pendant laquelle un matériel, dans des conditions de stockage spécifiées, et utilisée par la suite dans des conditions opérationnelles et / ou d'entraînement spécifiées, est supposé rester sûre et apte au service. 1. Si des dispositifs de contrôle de l'environnement sont utilisés, la durée de vie en service sera fonction des influences de l'environnement auxquelles le matériel a été exposé. 2. La durée de vie en service ne comprend pas l'élimination du service du matériel (mise au rebut). [cycle de vie, durée de vie en stockage, durée de vie opérationnelle]
service life cycle A time-based description of the events and environments an item experiences from manufacture to final expenditures or removal from the operational inventory, to include one or more mission profiles, but not disposal or demilitarization. The life cycle includes the service life cycle and the end-of-life events, e.g., disposal. [manufacture to target sequence*, life-profile (ARMP-1), service life, environment]	**cycle de vie en service** Description chronologique des événements et conditions ambiantes auxquelles un article est exposé depuis le moment de sa fabrication jusqu'au moment où il est totalement consommé ou retiré de l'inventaire opérationnel; ce cycle de vie comprend un ou plusieurs profils de mission mais pas la destruction ni la démilitarisation. Le cycle de vie comprend le cycle de vie en service ainsi que les événements de la fin de vie de service (mise au rebut, etc.) profil de vie (ARMP-1), durée de vie en service, environnement]
setter slots (holder, setting) Those features of a fuze which interact with a setter, either automatic or hand, to enable the setting of the required mode of function. [fuze setter] Ref: 2916.	**fentes des débouchoirs (de calage, de réglage)** Caractéristiques d'une fusée qui interviennent dans l'action d'un débouchoir, soit automatique ou à main, de façon à permettre le réglage du mode de fonctionnement souhaité. [débouchoir de fusée] Réf: 2916.

shall Provision that is mandatory. [should]	**doit, doivent, il faut** Clause impérative. [devrait, devraient, il faudrait]
shaped charge A charge shaped so as to concentrate its explosive force in a particular direction. (AAP-6) [hollow charge]	**charge formée** Charge ayant une forme de manière à concentrer l'énergie de détonation dans une direction particulière. (AAP-6) [charge creuse]
shell A hollow projectile filled with high explosive or other material, fired from a gun, cannon, howitzer or recoilless gun (rifle). Mortar fired projectiles are called shell (US) or bomb (UK). A solid projectile is called a shot.	**obus** Projectile creux rempli d'un explosif ou d'une autre substance, tiré d'un canon, d'un obusier, d'un mortier ou d'un canon sans recul.
shock *Mechanical environment:* The transient dynamic effect experienced by an object when a single pulse of mechanical energy is imparted to it. Ref: 2914, AECP-1, AECTP-400.	**choc** *Environnement mécanique:* Effet dynamique transitoire que subit un objet lorsqu'on lui communique une impulsion unique d'énergie mécanique. Réf: 2914, AECP-1, AECTP-400.
shock excitation - *Lightning:* See STANAG 4236.	**décharge oscillatoire** - *Foudre*: Voir STANAG 4236.
shock-to-detonation transition (SDT) Phenomenon of the transformation of a mechanical shock into a detonation. [deflagration-to-detonation transition, explosion-to-detonation transition]	**transition de choc en détonation (TCD)** Phénomène de transformation d'un choc mécanique en détonation. [transition choc-détonation*, transformation de déflagration en détonation, transformation d'explosion en détonation]
shock tube Flexible plastic tube of which the internal surface is covered by a thin layer of explosive and applied as a means of transmission in an explosive train. [detonating cord] Ref: AOP-31.	**tube choc** Tube plastique souple dont la surface interne est couverte d'une mince couche d'explosif et qui est utilisé comme moyen de transmission dans une chaîne pyrotechnique. [cordeau détonant] Réf: AOP-31.
should A provision that, although not mandatory, is highly desirable or recommended. [shall]	**devrait, devraient, il faudrait** Clause non obligatoire, mais vivement souhaitable ou recommandée. [doit, doivent, il faut]

single point failure Situation or event which on its own may lead to an unacceptable state or event. Single point failures are related to functions which, with respect to their safety and reliability : - are not redundant - are redundant but: (1) are affected by a common failure mode; (2) have a common external failure cause (external aggression); (3) are not controllable (loss of function not detectable). Ref: 4497.	**point de défaillance unique** Situation ou événement qui, à lui seul, pourra provoquer un état ou un événement inacceptable. Les points de défaillance unique se rapportent aux fonctions qui vis-à-vis de leur fiabilité : - ne sont pas redondées - sont redondées mais (1) sont affectées par un mode commun de défaillance (2) ont une cause extérieure commune de défaillance (agression extérieure) ; (3) ne sont pas contrôlables (perte de fonction non détectable). Réf: 4497.
slapper detonator: See "exploding foil initiator"	**détonateur "slapper"**: Voir "dispositif électro-pyrotechnique à élément projeté".
slow heating: See STANAG 4382 [cook-off]	**échauffement lent**: Voir STANAG 4382 [explosion par échauffement]
slurry: See "explosive slurry".	**bouillie explosive -**
sneak analysis Analyses designed to identify paths (control signals, information, etc.) not initially intended, and their consequences.	**analyse des causes insidieuses** Analyses pour rechercher des cheminements (de signal de commande, d'information, etc.) non initialement voulu et l'analyse de leurs conséquences.
sneak circuit An unexpected path or logic flow within a system which, under conditions, can initiate an undesired function or inhibit a desired function. Sneak situations may be caused by unexpected paths, order of events, wrong indications or wrong interpretation of observations (human failure). The path may consist of hardware, software or operator actions, or a combination of these. In this case, such circuits are not the result of hardware failures, but are latent conditions inadvertently designed into the system or coded into software programs causing the system perform unwanted, unintended actions.	**circuit insidieux** Flux logique ou chemin inattendu dans un système qui, sous es conditions, peut initier une fonction indésirée ou inhiber un fonctionnement désiré. Des situations insidieuses peuvent être causées par des cheminements ou une suite d' événements inattendus, fausses indications ou mauvaises interprétations d'observations (défaillance humaine). Le chemin peut être inclus dans le matériel informatique, le logiciel ou des actions de l'opérateur, ou une combinaison de ces derniers. Dans ce cas, de tels circuits ne sont pas le résultat de défauts de matériel informatique, mais sont des conditions latentes, conçus de manière non désirée dans le système ou codés dans le programme logiciel causant un fonctionnement non voulu ou des actions inattendues.

software The non-hardware elements of a system which include computer programming operating systems, programming languages, data bases and associated documentation. These consist of written or printed data, such as programs, systems of programs, routines, and symbolic languages, essential to the operation of computers to perform specific functions. [firmware, hardware] Ref: 4404, 4452, 4187, AOP-15.	**logiciel** Ensemble des éléments, autre que matériels qui incluent les systèmes d'exploitation, les langages de programmation, les bases de données et la documentation associée. Il comprend des données écrites ou imprimées, telles que les programmes, les systèmes , les routines et langages machine, nécessaires pour effectuer des opérations informatisées qui conduisent à l'amélioration des fonctions spécifiques. [documentation industrielle, "hardware"] Réf: 4404, 4452, 4187, AOP-15.
solar radiation The infra-red, visible and ultraviolet radiation from the sun. Values for the spectral energy distribution of solar radiation at sea level are given in STANAG 2895. Solar radiation beyond these spectra are usually not considered to be relevant to munition safety.	**rayonnement solaire** Rayonnement infrarouge, visible et ultraviolet émis par le soleil. La répartition spectrale de l'énergie du rayonnement solaire au niveau de la mer est présentée dans le STANAG 2895. La rayonnement solaire au-delà de ces spectres n'est habituellement pas considéré pertinent à la sécurité des munitions.
spin stabilized Rotation is imparted about the longitudinal projectile axis to ensure stability in flight. [fin stabilized] Ref: 2916.	**stabilisé par rotation** Rotation appliquée sur l'axe longitudinal du projectile de façon à assurer sa stabilité en vol. [stabilisé par ailettes] Réf: 2916.
squib A small electro-explosive device for producing a rapid evolution of gas to power a mechanical device or for igniting a pyrotechnic. (OB) [primer, initiator]	**étoupille** Petit dispositif électro-pyrotechnique qui produit une génération rapide de gaz afin d'activer un dispositif mécanique ou pour allumer une composition pyrotechnique. [amorce, initiateur]
stability State or quality of a product whose properties do not change or are very difficult to change.	**stabilité** État ou qualité d'un produit dont les propriétés ne se modifient pas ou très difficilement.
stabilizer A substance which stops or reduces self-catalytic decomposition of explosives. (OB)	**stabilisant** Matière qui arrête ou réduit la décomposition autocatalitique des matières explosives.
standard test The current, commonly accepted method of evaluating the safety, performance or reliability. [mandatory test, optional test] Ref. AOP20.	**essai normalisé** Méthode en vigueur couramment acceptée pour évaluer la sécurité, la performance ou la fiabilité. [essai obligatoire, essai facultatif] Réf : AOP-20.
stand-off	**distance d'action** : Voir "distance de fonctionnement".

stand-off The distance of a shaped charge from a target at the instant of detonation. In general there is an optimum value at which best performance is achieved. (OB) The definition in AAP-19 is not applicable for munitions. Ref: AOP-31.	**distance de fonctionnement** Distance séparant une charge formée d'une cible au moment de la détonation. En général, il existe une valeur optimale assurant la meilleure performance. La définition de l'AAP-19 n'est pas applicable pour les munitions. réf: AOP-31.
sterilization A process that renders a munition permanently incapable of being initiated or activated. This means that, after specified events and time, activating of energetic materials becomes impossible, when the munition has served its useful purpose or is no longer capable of functioning as designed. Ref: 4187, 4497, AOP-31. [neutralization]	**stérilisation** Processus qui rend une munition définitivement incapable d'être initiée ou activée. Ceci implique que les matières énergétiques ne peuvent plus être activées après des événements et un délai spécifiés, après que la munition a servi sa durée de vie en service ou qu'elle n'est plus en mesure de remplir ses fonctions prévues. Réf: 4187, 4497, AOP-31. [neutralisation]
sterilizer *Mines:* A device included in mines to render the mine permanently inoperative on expiration of a pre-determined time after laying. (AAP-6)	**dispositif de stérilisation** *Mines*: Dispositif incorporé dans certaines mines qui rend la mine définitivement inerte à l'expiration d'une période réglée après son mouillage ou sa pose. (Réf: AAP-6)
stimulus The applied energy or power such as current, voltage, mechanical impact, friction, or any other physical phenomenon such as (rate of) change of current, or pressure, which is capable of initiating directly or indirectly an explosive event. [stimulus level] Ref: AOP-20.	**stimulus** Énergie ou puissance appliquée, telle que courant, tension, impact mécanique, friction ou autre phénomène physique tel que (taux de) changement de courant ou pression, capable d'initier directement ou indirectement un événement explosif. [niveau du stimulus] Réf : AOP-20.
stimulus level *Testing:* The value of the test variable imparted to an individual item or test unit. A stimulus level may expressed as: - mechanical energy level (e.g., drop height, mass of bullet); - electrical energy or power (e.g., current, voltage); - rate of change of energy or power (e.g., pressure rise), etc. [stimulus, no-fire threshold, all-fire level] Ref: AOP-20.	**niveau du stimulus** *Essais :* Valeur de la variable d'essai appliquée à une spécimen d'essai. Un niveau de stimulus peut s'exprimer comme: - énergie mécanique (par exemple hauteur de chute, masse d'une balle) ; - énergie ou puissance électrique (courant, tension) ; - taux de variation d'énergie ou de puissance (montée en pression) ; etc. [stimulus, seuil de non-feu, seuil de mise à feu] Réf : AOP-20.
storage The deposit of munition in a covered or uncovered enclosure, awaiting transportation to or from operational theatres or direct use. Normally, the munition is stacked, in its logistic package, and ideally in a controlled environment. [logistic storage, tactical storage]	**stockage** Dépôt de munition dans une enceinte, couverte ou non, en attendant le transport vers les, ou en retour des zones opérationnelles ou l'utilisation immédiat. Normalement, la munition est empilée dans son emballage logistique, dans le cas idéal dans un environnement contrôlé. [stockage logistique, stockage tactique]
storage and transit conditions: See STANAG 2895. [service environment, logistic configuration]	**conditions de stockage et de transit**: Voir STANAG 2895. [environnement propre au service, configuration logistique]

storage environment The total set of all external natural and induced conditions to which a materiel is exposed during its storage life. [environmental profile, life cycle, storage life]	**environnement de stockage** Ensemble de toutes les conditions physiques et chimiques auxquelles un matériel est exposé pendant sa vie de stockage. [environnement d'exploitation*, profil d'environnement, cycle de vie, durée de vie en service]
storage life The time for which an item of supply, including explosives, given specific storage conditions, may be expected to remain serviceable and safe. (AAP-6) [service life, operational life, life cycle, storage and transit conditions]	**durée de vie en stockage** Durée pendant laquelle un article d'approvisionnement - y compris les matières et produits explosifs - dans des conditions de stockage spécifiées, est supposé rester sûr et apte au service. (AAP-6) [durée de vie en service, durée de vie opérationnelle, cycle de vie, conditions de stockage et de transit]
stored energy Latent energy within a (sub)system which, when triggered, is released to perform a function. Examples are: springs under load, batteries, charged capacitors, compressed gas devices and explosive actuators. Ref: 4187.	**énergie emmagasinée** Énergie latente contenue dans un (sous)système, qui, sur commande, est libérée pour l'exécution d'une fonction. Des exemples sont: des ressorts bandés, des batteries, des condensateurs chargés, des dispositifs à gaz comprimé et des déclencheurs d' explosifs. Réf: 4187.
strain rate - *Testing explosives:* See STANAG 4443.	**...** - *Essais matières explosives*: Voir STANAG 4443.
streamer - *Lightning:* See STANAGs 4236 and 4327.	**traceur** (2) - *Foudre*: Voir les STANAG 4236 et 4327.
strike *Lightning:* A lightning discharge which interacts with the materiel which becomes a part of the discharge channel. Ref: 4236.	**coup de foudre** *Foudre*: Décharge qui interagit avec le matériel qui devient une partie du canal de décharge. Réf: 4236.
stroke - *Lightning:* See STANAG 4236.	**coup en retour**- *Foudre*: Voir STANAG 4236.
strong data typing *Computing systems*: A fault tolerance technique wherein a discrete or variable data is represented by a bit pattern that is unique for each valid value and cannot be confused with any other valid value even as a result of a one or two bit error. (4404)	**données en caractères gras** *Systèmes informatiques:* Méthode de tolérance aux pannes dans laquelle une donnée discrète ou variable est représentée par une configuration binaire qui est unique pour chaque valeur et qui ne peut être confondue avec une autre valeur correcte, même dans le cas d'erreur sur un ou deux bits. (4404)
subsequent strokes – *Lightning:* See STANAG 4236.	**coups en retour secondaires** - *Foudre*: Voir STANAG 4236.
sub-system A major subdivision of a system that performs one or more specified functions in the overall functioning of that system. (OB) It may in itself constitute a system.	**sous-système** Sous-ensemble d'un système remplissant une ou plusieurs fonctions spécifiées dans le fonctionnement global du système. En soi il pourra constituer un système.
suitability for service: See "safety and suitability for service". [reliability, safety]	**aptitude au service**: Voir "sécurité et aptitude au service". [fiabilité, sécurité]

surface-launched munition (SLM) Any munition containing explosives which is launched from the ground or sea surface. Ref: 4337.	**munition à lanceur de surface (MLS)** Toute munition qui contient des substances explosives, qui est lancée de la surface de la terre ou de la mer. Réf: 4337.
swept stroke - *Lightning:* See STANAG 4236.	**foudre balayante** - *Foudre*: Voir STANAG 4236.
sympathetic detonation Detonation of a charge by exploding another charge adjacent to it. (AAP-6; AAP-19)	**détonation par influence** Détonation d'une charge obtenue par celle d'une charge proche. (AAP-6; AAP-19)
sympathetic reaction Explosive reaction of a munition by exploding another munition adjacent to it. Ref: 4396.	**réaction par influence** Réaction explosive d'une munition obtenue par explosion d'une munition proche. Réf: 4396.
system A combination of complete operating equipments, assemblies, components, parts or accessories, including software and man/machine interfaces, integrated to perform a specific operational function. (OB)	**système** Ensemble d'équipements, de structures, de composants, de pièces ou d'accessoires complets et opérationnels, y compris les logiciels et les interfaces homme-machine, intégrés pour remplir des fonctions opérationnelles spécifiées.
system design pressure (System DP) The value of Cannon Design Pressure (DP) or Projectile DP (whichever is the lower) for a specified system. Ref: 4110, 4224, 4493.	**pression nominale du système** Valeur de la pression nominale la plus basse, soit du canon, soit du projectile, ce-ci pour un système spécifié. Réf: 4110, 4224, 4493.
system safety The capability of a system to avoid causing personal injury or damage to property or the external environment.	**sécurité système** Capacité d'un système d'éviter de causer des blessure à personnes ou de dégâts à des propriétés ou à l'environnement.
system safety device *Remote controlled firing/fuzing systems:* A device which, once the system is switched on, can accept and process sensor information and prevents unintentional signals being passed to the initiator. [safety feature] Ref: AOP-31	**dispositif de sécurité système** *Systèmes de mise de feu télécommandés:* Dispositif qui, une fois le système enclenché, est capable de recevoir et traiter l'information reçue d'un capteur et d'empêcher le passage non intentionnel de signaux vers l'initiateur. [dispositif de sécurité] Réf: AOP-31.
system safety program The combined tasks and activities of system safety management and system engineering implemented by acquisition project managers. Ref: 4497.	**programme de sécurité du système** Tâches et activités combinées de gestion de sécurité du système et d'étude du système mises en oeuvre par les gestionnaires du projet d'acquisition. Réf: 4497.
tactical storage The storage of an item for a limited period of time under field conditions. It denotes storage in ammunition depots or readying sites located adjacent to bases, in naval vessels, and, on land, deployment areas, usually without any kind of controlled environment. [storage, logistic storage]	**stockage tactique** Emmagasinage d'un article de courte durée en entrepôt d'articles, dans de conditions opératio0nnelles. La notion comprend le stockage en dépôts de munitions ou des zones de préparation situés près des bases, dans les navires, et sur terre dans les zones de déploiement, dans un environnement normalement nullement contrôlé. [stockage, stockage logistique]

tactical transportation **Transport of items in field conditions from depot storage to bases, naval supply vessels, deployment areas, etc. The concept included short transport of items within and between these sites.** **[transportation, logistic transportation]**	**transport tactique** Transport d'articles dans de conditions opérationnelles, du stockage en entrepôt vers les bases, navires d'approvisionnement de la marine, zones de déploiement, etc. La notion comprend le transport sur courtes distances d'articles au sein et entre ces emplacements. [transport, transport logistique]
temperature coefficient *Propulsion (sub)systems*: The variation per °C with respect to chamber pressure or muzzle velocity, as specified. Temperature coefficients for cannon munitions are specified in terms of temperature range between LFT and UFT. Ref: 4224, 4493.	**coefficient de température** *(Sous)systèmes de propulsion*: Variation par °C de la pression de chambre ou de la vitesse initiale, selon les spécifications. A spécifier en termes de gamme de température entre la LFT et l'UFT. Réf: 4224, 4493.
test configuration A detailed description of the test item state during the test, e.g., package mode or unpackaged, operating or not, interfaces, environmental conditioning, interfaces with associated equipment, fixation and orientation on test equipment, measurement points and eventual modifications for safety (e.g., replacement of explosives by inert material).	**configuration d'essai** Description détaillée de l'état du spécimen pendant l'essai, par exemple le mode d'emballage ou non emballé, en opération ou non, interfaces, conditionnement en environnement, interfaces avec les équipements associés, fixation et orientation sur l'équipement d'essai, points de mesure, et - le cas échéant - des modifications pour des raisons de sécurité (par exemple remplacement de matières explosives par une matière inerte).
test directive *In staff requirements:* A documented set of requirements including a requirement to conduct tests and the objectives of the tests.	**directive d'essais** *Dans les exigences de l'état major*: Un dossier d'exigences qui comprend une exigence d'exécuter des essais et les objectifs des essais.
test method A document describing the requirements for the execution of a type of test and its objectives. It comprises modes of execution, sequences, parameters, configurations, equipment, data collection and treatment, and potentially criteria for acceptance with regard to the objectives of the test. 1. Test methods are used as reference documents in a test plan. 2. AC/310 and other NATO publications of test methods are in STANAGs and APs. [test procedure*, test plan, test parameter]	**procédure d'essai** Document qui décrit les exigences pour l'exécution d'un type d'essais et de ses objectifs. Elle comprend les modes d'exécution, les séquences, les paramètres, les configurations, l'équipement, la collection et le traitement des données, et potentiellement les critères pour l'acceptation par rapport aux objectifs de l'essai. 1. Les procédures d'essais sont utilisés comme documents de référence dans un plan d'essais. 2. Les procédures d'essais de l'OTAN sont publiées comme STANAG ou AP. [méthode d'essais*, paramètre d'essais]

test parameter *In a test plan or a test method:* A property which permits variation of the test configuration, severity or procedure. Since selection of test parameters can change the controlled environment or otherwise influence results, each variation and each severity of the test parameters shall be specified in the test plan or the test method. [test plan, test method].	**paramètre d'essais** *Dans un plan ou une procédure d'essais:* Une propriété qui permet une variation de la configuration de l'essai, de la sévérité ou du choix et/ou de la quantité des échantillons à tester. Puisque la sélection des paramètres d'essais peut changer l'environnement à appliquer, ou autrement influencer les résultats, chaque variation et chaque sévérité des paramètres d'essais doivent être spécifiées dans le plan ou la procédure d'essais. [plan d'essais, procédure d'essais]
test plan A document describing the tests to be executed, required to meet the objectives defined in the test directives. Included are: identification and quantities of the munition to be tested, reference to or description of the test methods, the test sequences, the values of the test parameters (severities), personnel and equipment needed, procedures for disposal of explosive remainders, data collection and treatment, and the criteria to meet the requirements. Usually, the test plan is established by a project manager. [test directive, test parameter, test method.]	**plan d'essais** Document qui décrit les essais à exécuter, qui sont nécessaires pour satisfaire les objectifs définis dans la directive d'essais. Y sont compris: l'identification et les quantités de la munition à éprouver, les références ou descriptions des procédures d'essais, les séquences des essais, les valeurs des paramètres d'essais, les procédures pour la mise au rebut des restes explosifs, la collecte et le traitement des données et les critères pour satisfaire les exigences. Normalement, le plan d'essai est établi par le directeur du projet. [directive d'essais, paramètre d'essais, procédure d'essais]
test procedure: See "test method"	**procédure d'essai**
test sequence *General*: Series of tests as a part of a trial or a test program, executed sequentially on a test specimen. *(N)EMP testing*: A series of pulses, radiated or injected by bulk current injection or applied by voltage probes for a given configuration (electrical and geometrical) of the munition or the weapon system or the equipment. (4416)	**séquence d'essais** *En général:* Série d'essais, faisant partie d'une campagne ou d'un programme d'essais, auxquels un spécimen d'essais est soumis consécutivement. *Essais IEM(N)*: Série d'impulsions, émises par rayonnement ou injectées par injection de courant sur toron ou appliquées par des sondes de tension, pour une configuration donnée (électrique et géométrique) de la munition ou du système d'arme ou de l'équipement. (4416)
test severity The level of the test parameters to which the test has to be submitted.	**sévérité d'essai** Le niveau des paramètres d'essais auquel le spécimen à tester doit être soumis.
test validation Acceptance of the execution of the test in accordance with the test plan and the suitability to satisfy the test objectives. [valid test, invalid test]	**validation d'un essai** Acceptation de l'exécution de l'essai conformément au plan d'essai et à l'aptitude pour répondre aux objectifs de l'essai. [essai validé, essai non-validé]

thermal spark *Electric phenomenon*: Incandescent material, produced when a current is forced to cross a joint between two conducting materials, which have imperfect mating between their surfaces. [voltage spark] Ref: 4327.	**étincelle thermique** *Phénomène électrique*: Le matériau incandescent qui est produit quand un courant est contraint de traverser un joint entre deux matériaux conducteurs dont les surfaces se raccordent mal. [étincelle en tension] Réf: 4327.
thermal time constant *Electro-explosive devices*: The time the bridgewire, the film or the conductive composition takes to reach 63% of the equilibrium temperature when a specified constant power is applied to the terminals of the electro-explosive device.	**constante de temps thermique** *Dispositifs électro-pyrotechniques:* Délai pour un fil chaud, un film ou une composition conductrice pour atteindre 63% de sa température d'équilibre, quand une puissance constante spécifiée est appliquée aux électrodes du dispositif électro-pyrotechnique.
threat: See "hazard". Ref: 4439.	**menace**: Voir "danger". Réf: 4439.
time fuze A fuze designed to initiate a munition at a desired time after launch, release, drop, impact or emplacement. The time is generally set just prior to use. The timing function may be performed by mechanical, electronic, pyrotechnic or other clockwork. [fuzing system, mechanical time fuze] Ref: 4326.	**fusée chronométrique** Fusée conçue pour initier une munition à un moment désiré après lancement, relâche, chute, impact ou positionnement. Normalement, la durée est réglée juste avant utilisation. La fonction d'écoulement de temps peut être réalisée par chronométrage mécanique, électronique, pyrotechnique ou autre. [système de fusée, fusée chronométrique] Réf: 4326.
time to reach peak - *Lightning:* See STANAGs 4236 and 4327	**temps pour atteindre la crête** - *Foudre*: Voir les STANAG 4236 et 4327.
total duration - *Lightning:* See STANAGs 4236 and 4327.	**durée totale** - *Foudre*: Voir les STANAG 4236 et 4327.
tracer Pyrotechnic element enabling optical tracking of the trajectory of a projectile.	**traceur** (1) Artifice permettant de suivre par des moyens optiques la trajectoire d'un projectile.
transfer function *Lightning test*: At a given frequency the ratio between two points in an electrical system of the amplitude of the signals at these points, together with the phase difference between them. The complete transfer function, over the range of frequencies considered, consists of plots against frequency of the amplitude ratio and phase angle between the two points of interest. Ref: 4327.	**fonction de transfert** *Simulation de foudre*: A une fréquence donnée, le rapport entre deux points pour un système électrique de l'amplitude des signaux qui existent en ces points, et par la différence de phase qui existent entre eux. La fonction de transfert complète, pour la gamme des fréquences considérées, est représentée par un tracé en fonction de la fréquence du rapport d'amplitude et de l'angle de phase existant entre ces deux points. Réf: 4327.
transportation The conveyance of materiel by land, sea, or air, either as cargo or in the form of installed equipment. Ref: 2914, AECP-1. [transportation, logistic transportation, tactical transportation]	**transport** Acheminement de matériel par terre, mer ou air, soit comme marchandise, soit sous forme d'équipement installé. Réf: 2914, AECP-1. [transport, transport logistique, transport tactique]
triggered lightning strike – *Lightning:* See STANAG 4236.	**impact de foudre déclenché** - *Foudre*: Voir STANAG 4236.

type I reaction: See "response descriptors". **type II, III, IV, V reactions**: ditto The response descriptors replace the "type ... reaction descriptors" in STANAGs 4240, 4241, 4382, 4396, 4496 and 4526.	**réaction de type I**: Voir "réactions types". **réactions de type II, III, IV, V**: dito. Les "réactions types" remplacent les anciennes descriptions des STANAG 4240, 4241, 4382, 4396, 4496 et 4526.
type qualification: See "qualification" or "final qualification".	**qualification type**: Voir "qualification" ou "homologation finale".
unarmed A system is unarmed when all safety devices are in a safe position. [armed]	**non armé** Un système est non armé quand tous dispositifs de sécurité sont en position de sécurité. [armé]
underwater - launched munition (ULM) Any munition that is ejected, propelled, released, placed or otherwise launched in an underwater environment. Ref: 4338.	**munition à lanceur sous-marin** Toute munition éjectée, propulsée, larguée ou lancée de toute autre façon en milieu sous-marin. Réf: 4338.
underwater munition Munition that functions underwater and all devices, components and support equipment of that munition. Ref: 4333.	**munition sous-marine** Munition qui fonctionne sous l'eau ainsi que tous les dispositifs, composants et équipements de maintenance de cette munition. Réf: 4333.
unsafe area Surroundings of a weapon system, the trajectory of launched munitions and the areas where the munition payload could function, wherein the risks for friendly personnel and materiel are unacceptable. [danger area*, restricted area or zone, safety map, safety template].	**zone dangereuse** (2) Environs d'un système d'arme, de la trajectoire des munitions lancées et les zones où la charges utile de la munition peut fonctionner, dans laquelle les risques pour le personnel ami et leur matériel sont inacceptables. [zone restreinte, gabarit de sécurité]
unsafe conditions A system state that may result in a mishap. [unsafe state*, hazardous state*, mishap] Ref: 4404.	**conditions dangereuses** État du système qui peut provoquer un accident. [état dangereux, état d'insécurité*, état de risque*, accident] Réf: 4404.
upper conditioning temperature (UCT) The temperature to which test items are stabilized for hot tests. This temperature is based on the climatic region that the testing nation and the using nation predict to be the worst case hot environment that the test item will encounter during storage and transportation. [upper conditioning temperature] Ref: 4224, 4225, 4493.	**température supérieure de conditionnement** La température à laquelle les spécimens d'essai sont stabilisés en vue d'essais à chaud. Cette température est celle de la région climatique que le pays effectuant les essais et les pays utilisateurs considèrent comme l'environnement chaud correspondant au pire des cas auquel l'article testé sera exposé pendant le stockage et le transport. [température inférieure de conditionnement] Réf: 4224, 4225, 4493.

upper firing temperature (UFT) The temperature to which test items are stabilized for hot test firing. This temperature is based on the climatic region that the testing nation and the using nation predict to be the worst case hot firing environment that the test item will encounter during operations. [upper firing temperature] Ref: 4224, 4225, 4493.	**température supérieure de tir** La température à laquelle les spécimens d'essai sont stabilisés en vue d'essais de tir à chaud. Cette température est celle de la région climatique que le pays effectuant les essais et les pays utilisateurs considèrent comme l'environnement de tir à chaud correspondant au pire des cas auquel l'article testé sera exposé au cours des opérations. [température supérieure de tir] Réf: 4224, 4225, 4493.
vibration A state of oscillatory motion induced in a body or mechanical system by an input of mechanical energy. This input may in itself be oscillatory, or in the form of a shock pulse or a succession of shock pulses. Ref: 2914, AECP-1.	**vibration** Etat de mouvement oscillatoire communiqué à un corps ou à un système mécanique par un apport d'énergie mécanique. Cet apport peut être lui-même oscillatoire, ou se présenter sous la forme d'une impulsion de choc ou d'une suite d'impulsions de choc. Réf: 2914, AECP-1.
voltage spark *Electric environment*: A small electrical discharge which occurs when the voltage difference between two conductors rises to a value high enough to break down the intervening medium, whether this is air or other dielectric. Ref: 4327. [thermal spark]	**étincelle en tension** *Environnement électrique* : Une petite décharge électrique qui se produit lorsque la différence de tension entre deux conducteurs, augmente jusqu'à une valeur suffisamment élevée pour provoquer un arc dans le milieu qui les sépare, même si ce milieu est de l'air ou un autre diélectrique. Réf: 4327. [étincelle thermique]
waiver 1. *Qualification of a munition*: Acceptance by the appropriate accredited acceptance authority, of a munition, which does not meet all requirements for safety. Ref: 4432. 2. *In QA*: See AQAP-119.	**dérogation** 1. *Qualification d'une munition*: Acceptation par l'autorité accréditée compétente d'une munition qui n'a pas satisfait toutes les exigences de sécurité. Réf: 4432. 2. *En matière d'AQ*: Voir AQAP-119.
warhead The portion of a weapon system which contains the payload which the projectile, rocket, missile or torpedo is to deliver. Generally, the payload is explosive, or it may contain telemetric or other components. See also AAP-6. [rocket, missile, projectile, payload]	**tête militaire** Partie d'un système d'arme qui contient la charge utile, que le projectile, la fusée, le missile ou la torpille doit délivrer. En général, la charge utile est explosive ou elle peut être l'équipement télémétrique ou autre. Voir aussi AAP-6. [ogive*, fusée, missile, projectile, charge utile]
washout *Disposal*: The use of an agent, such as hot water, solvent or cryogenic dry wash, to remove energetic material in a munition without destruction of the case metal. Ref: 4518.	**déchargement par lavage** *Mise au rebut:* Emploi d'un agent, tel que eau chaude, solvant ou nettoyage à froid et sec pour enlever la matière énergétique dans une munition sans destruction du corps métallique. Réf: 4518.

watchdog timer *Computing systems:* An independent, external timer that ensures that the computer cannot enter an infinite loop. Watchdog timers are normally reset by the computer program. Expiration of the timer results in generation of an interrupt, program restart, or other function that terminates current program execution. Ref: 4404.	**horloge de surveillance** *Système informatisé:* Horloge externe indépendante, qui s'assure que l'ordinateur n'entre pas dans une boucle infinie. Elle est normalement remise à zéro par le programme de l'ordinateur. L'arrêt de l'horloge déclenche une interruption, un redémarrage du programme ou une autre fonction qui achève l'exécution du programme en cours. ["chien de garde"]Réf: 4404.
water jet cutting *Disposal*: The use of a high pressure water jet to cut a variety of materials. If abrasive is entrained into the water jet, the method is called an abrasive water jet cutting; metallic, or hard materials such as metal plates, ceramics, or glass can be cut. Ref 4518.	**découpage par jet d'eau** *Mise au rebut*: Utilisation d'un jet d'eau sous pression pour découper divers matériaux. Si un abrasif est entraîné par le jet d'eau, la méthode est appelée découpe par jet d'eau abrasif. Les matériaux métalliques ou les matériaux durs tels que les plaques métalliques, les céramiques ou le verre peuvent être coupés. Réf 4518.
weapon classes *Lightning tests*: See STANAG 4327.	**catégories d'armes** *Essais "foudre":* Voir STANAG 4327.
weapon system A weapon and those components required for its operation. (AAP-6). The weapon system comprises the aggregate of the weapon, the associated launching vehicle or platform launching the munition, the available munitions and the ancillary equipment necessary to test, aim, launch and guide the munition, as applicable [ordnance]	**système d'arme** Arme et matériel nécessaires à sa mise en oeuvre. (AAP-6) Le système d'arme comprend l'ensemble arme, véhicule ou plate-forme de lancement associé, munitions à disposition et le matériel nécessaire pour les essais, le pointage, le lancement et le guidage de la munition, selon le cas. [munition et arme]
weapon transient level (WTL) - *Lightning tests:* See STANAG 4327.	**niveau transitoire pour une arme** - *Simulation de foudre*: Voir STANAG 4327.
wear life *Cannons:* The limit that could, if exceeded, result in unstable, inaccurate, inconsistent, or unsafe, performance of the projectile. This limit is dependent on the number of rounds and charges fired, or on actual measurements of the bore diameter. [safe fatigue life, service life] Ref. 4516.	**durée de vie en usure** *Canons*: Limite qui, si dépassée, pourrait résulter en des performances dangereuses, instables, imprécises ou incohérentes du projectile. Cette limite est fonsction du nombre de coups et des charges tirés, ou des mesures directes du diamétre de l'âme. [durée de vie en fatigue du point de vue de la sécurité, durée de vie en service] Réf. 4516.
whole system test - *Lightning tests:* See STANAG 4327.	**essai sur système complet** - *Simulation de foudre*: Voir STANAG 4327
whole weapon test - *Lightning tests:* See STANAG 4327.	**essai sur arme complète** - *Simulation de foudre*: Voir STANAG 4327.
wrench slots *Fuzes*: Those features of a fuze, which in the assembly of the fuze to the projectile, permit tightening of the fuze. Ref: 2916.	**fentes de vissage** *Fusées*: Caractéristiques d'une fusée qui permettent de la fixer au projectile lors du montage. [coulisses de vissage] Réf: 2916.

REFERENCE DOCUMENTS / DOCUMENTS DE RÉFÉRENCE

The documents which have been used for the composition of this AOP and other related glossaries and other glossaries and dictionaries which may be consulted are listed below.

Les documents utilisés pour la composition de la présente AOP et d'autres glossaires et dictionnaires qui pourraient être consultés sont évoqués ci-dessous.

Reference documents / Documents de référence généraux

a. AAP-4: NATO Standardization Agreements and Allied Publications / Accords de standardisation et publications interalliées de l' OTAN.

b. AAP-6: NATO Glossary of Terms and Definitions (English and French) / Glossaire OTAN de termes et définitions (Anglais et Français).

c. AAP-19: NATO Combat Engineer Glossary / Glossaire OTAN du génie de combat.

d. AASTP-3: Manual on the NATO Safety Principles for the Hazard Classification of Military Ammunition and Explosives (Annex A) / Manuel sur les principes de sécurité OTAN applicables au stockage des munitions et des explosifs (Annexe A).

e. ARMP-1 (STANAG 4174): NATO Requirements for Reliability and Maintainability (Annex A) / Exigences OTAN en matière de fiabilité et de maintenabilité (Annexe A).

f. STANAG 3968: NATO Glossary of Electromagnetic Terminology / Glossaire OTAN de terminologie électromagnétique.

g. STANAG 4110: Definition of Pressure Terms and their Inter-relationship for Use in the Design and Proof of Cannons and Ammunitions / Définition des termes relatifs à la pression et leur correlation, à utiliser lors de la conception et de la mise à l'épreuve des canons et des munitions.

h. Handbook on aims, organization and working procedures for the group on safety and suitability for service of munitions and explosives (AC/310) / Manuel sur les objectifs, l'organisation et les méthodes de travail du Groupe sur la sécurité et l'aptitude au service des munitions et des matières et produits explosifs (AC/310).

i. The Concise Oxford Dictionary (UK).

j. Le Petit Robert, dictionnaire alphabétique et analogique de la langue française (FR).

k. Glossary of Terms, compiled by the Ordnance Board (UK) (Ed 1, Aug '86).

l. Dictionnaire de Pyrotechnie, GTPS (FR).

m. MIL-STD 444, Nomenclature and definitions in the ammunition area. (USA)

n. MIL-STD 882, System safety program requirements. (USA)

o. ST-9-152, Ordnance Technical Terminology (US Army)

p. NIMIC Glossary of Terms, NIMIC-RB-407-97, 97.11.06 (with permission of the Steering Committee).

q. H SystSäke, System Safety Manual, Swedish Armed Forces (20 Apr 1998).

r. Weapon and Ammunition Safety Manual (FMV, Sweden)

2. STANAGs and APs developed by AC/ 310 / STANAG et AP développés par l'AC/310.

In the columns are presented the document number and a shortened title (keywords). The full titles are published in AAP-4. The status of documents which have not been promulgated may be found in the decision sheets of AC/310.

Dans les colonnes le numéro du document et le titre raccourci (mots clef) sont présentés. Les titres non-raccourcis sont publiés dans l'AAP-4. Le statut des documents qui ne sont pas encore promulgués se trouveront dans les comptes-rendu de l'AC/310.

SG/1 : Documents concerning explosives and related products / Documents concernant les matières explosives et les produits associés:

4021 CE / Tétryl
4022 RDX / Hexogène
4023 PETN / Pentrite
4024 AN / Nitrate d'ammonium
4025 TNT / Tolite
4026 NGU / Nitroguanidine
4041 DNT / Dinitrotoluène
4117 Propellant stability / Stabilité de propergols
4147 Chemical compatibility - explosive components / Compatibilité chimique - éléments pyrotechniques
4170 Qualification explosives / Qualification de matières explosives
AOP-7 Qualification of explosives - test methods / Essais de qualification de matières explosives
4178 NC / Nitrate de cellulose
4230 HNS / Hexanitrostilbène
4284 HMX / Octogène
4299 AP / Perchlorate d'ammonium
4300 AL powder / Poudre d'aluminium
4397 Explosives catalogue / Catalogue d'explosifs
AOP-26 Explosives catalogue / Catalogue d'explosifs
4443 Mechanical test 1-axial compression / Essai mécanique compression uniaxiale
4487 Friction test / Essai de friction
4488 Shock test / Essai de choc
4489 Impact test / Essai d'impact
4490 Electrostatic discharge test - explosives / Essai de décharge électrostatique
4491 Thermal test / Essai thermique
4506 1-axial tensile test / Essai de traction uniaxial
4507 Relaxation test / Essai de relaxation
4515 Thermal characteristics / Caractéristiques thermiques
4525 Thermomechanical properties / Propriétés thermomécaniques
4527 NC based propellants - stability assessment / Propergols à base de NC - évaluation de la stabilité
4540 Dynamic-mechanical analysis / Analyse mécanique en dynamique
4541 Stability NC-NG based propellants - DPA / Stabilité de propergols à base de NC-NG, DPA
4542 Stability NC-NG based propellants - 2-NDPA / Stabilité de propergols à base de NC-NG, 2-NDPA
4543 NTO / ONTA
4556 Vacuum stability test / Épreuve de stabilité sous vide
4566 CL20 / CL20

SG/2: Documents concerning fuzing/initiation systems / Documents concernant les systèmes de fusée/d'initiation:

2916 Fuze contours / Contours de fusées
4157 Safety testing / Essais de sécurité
AOP-20 Safety tests - Qualification / Essais de sécurité - Homologation
4187 Design / Conception
AOP-16 Design requirements / Exigences de conception
4326 Fuze characteristics / Caractéristiques de fusées
AOP-8 Fuze characteristics / Caractéristiques de fusées
4363 Leads - explosive components / Relais - composants explosifs
AOP-21 Test methods explosive components / Méthodes d'essai de composants explosifs
4368 Design - rocket motor ignition / Conception - allumage de moteurs de roquettes
4369 Design - electronic fuze setting - large calibers / Conception - Réglage de fusées électroniques - grands calibres
AOP-22 Electronic fuze setting / Réglage de fusées électroniques
4547 Design - electronic fuze setting - medium calibers / Conception - réglage de fusées électroniques - calibres moyens
4560 EED characterization / Caractérisation des DEP

SG/3 : Documents concerning environments and environmental testing / Documents concernant les environnements et les essais d'environnement:

2895 Climatic environment / Environnement climatique
2914 Mechanical environment / Environnement mécanique
AECP-1 Mechanical environment / Environnement mécanique

4234 EM / RF environment / Environnement EM / RF
4235 Electrostatic environment / Environnement électrostatique
4236 Lightning environment / Environnement foudre
4238 EMR hardening of munitions / Résistance EMR des DEP de munitions
4239 ESD testing / Essais de munitions aux décharges électrostatiques
AOP-24 ESD testing / Essais de munitions aux décharges électrostatiques
4240 Liquid Fuel Fire / Echauffement rapide (Incendie de carburant liquide)
4241 Bullet Attack / Attaque par balles
4242 Munitions vibration tests, tracked vehicles / Vibration tests- munitions, véhicules à chenilles
AOP-34 Munitions vibration tests, tracked vehicles / Vibration tests- munitions, véhicules à chenilles
4315 Life assessment / Èvaluation de durée de vie
4324 EMR testing / Essais EMR
4327 Lightning test & assessment / Essais et évaluation orage
AOP-25 Lightning test methods / Méthodes d'essais orage
4375 Safety drop / Chute libre
4382 Slow heating / Echauffement lent
4396 Sympathetic reaction / Réaction par influence
4416 NEMP testing of munitions / Essais NEMP de munitons
4496 Fragment impact / Impact d'éclats
4526 Shaped charge jet inpact / Impact de jet de charge creuse

SG / 4 : Documents concerning generic munition systems / Documents concernant les systèmes génériques de munitions :

2818 Demolition materiel / Matériel de destruction
3786 Airborne dispenser weapons - design / Conception d'armes aéroportés
AOP-31 Demolition materiel - design / Conception de matériel de destruction
AOP-32 Demolition materiel - testing / Essais sur le matériel de destruction
4224 Cannon munitions tests / Essais munitions canons > 40 mm
4225 Mortar munitions evaluation / Évaluation de munitions de mortier
4297 Assessment & testing munitions / Évaluations & essais de munitions
AOP-15 Assessment & testing munitions / Evaluations & essais de munitions
4325 ALM testing (air launched munitions) / Essais sur MLA (munitions à lanceur aérien)
4333 Underwater munitions design / Conception de munitions sous-marines
4337 SLM (surface launched munitions) testing / Essais sur MLS (munitions à lanceur de surface)
4338 ULM (underwater launched munitions) appraisal / Évaluation de munitions à lanceur sous-marin
4404 Munitions related SCCS design / Conception de systèmes informatisés critiques - sécurité munitions
4423 Cannon ammunitions 12.7-40 mm evaluation / Évaluation de munitions pour canons 12,7 - 40 mm
4432 Guided ALM (air launched munitions) design / Conception de munitions guidées lancées air
4433 Mortar munitions design / Conception de munitions de mortier
4439 IM / MURAT
AOP-39 IM developpement, assessment & testing / Développement, évaluations & essais de MURAT
4452 Safety critical computing systems (SCCS) assessment / Evaluation SCCS
4493 Tank munitions assessment / Évaluation de munitions pour char
4497 Hand emplaced munitions / Munitions à positionnement manuel
4516 Cannon ordnance >12.7mm / Systèmes d'armes de calibre >12,7mm
4517 Large caliber ordnance >40mm design / Conception de systèmes d'artillerie de grands calibres >40mm
4518 Disposal / Destruction
4519 Gas generators / Générateurs de gaz
4520 Rifle launched grenades / Grenades à fusil

PLAN OF ACTION AND MILESTONES (POA&M)

FOR
MK1, MK2 AND MK22 MINE CLEARANCE SYSTEM (MCS)

FISCAL YEAR 2009-10
UNITED STATES MARINE CORPS
MARINE CORPS SYSTEMS COMMAND

October 2007

Distribution Statement D: Distribution authorized to the Department of Defense (DoD) and U.S. DoD Contractors only. Other requests for this document shall be referred to MCSC, ATTN: Mr. Jerry L. Mazza, Program Manager for Ammunition, 2200 Lester Street, Quantico, VA 22134.

8. FUNDING ACROSS THE FYDP

8.1 IM FUNDING

Table 8-1 and Table 8-2 breaks down funding spent towards IM investment, procurement funding, and associated costs for MK1 and MK2, MCS over the course of the FYDP.

MCS Insensitive Munitions (IM) Investment and Procurement Funding ($K)						
IM Investment Funding	**FY08**	**FY09**	**FY10**	**FY11**	**FY12**	**FY13**
IM Design and Testing	3.466	0.000	0.000	0.000	0.000	0.000
Investment Subtotal	**3.466**	**0.000**	**0.000**	**0.000**	**0.000**	**0.000**
Procurement	**FY08**	**FY09**	**FY10**	**FY11**	**FY12**	**FY13**
Army	0.000	0.000	0.000	0.000	0.000	0.000
Air Force	0.000	0.000	0.000	0.000	0.000	0.000
Marine Corps M58	0.000	6.385	0.000	7.050	0.000	0.000
Marine Corps M59	0.085	0.000	0.000	0.000	0.000	0.000
Marine Corps MK22 MOD 4	0.000	3.684	0.000	0.000	0.000	0.000
Navy	0.000	0.000	0.000	0.000	0.000	0.000
SOCOM	0.000	0.000	0.000	0.000	0.000	0.000
Procurement Subtotal	0.085	10.069	0.000	7.050	0.000	0.000
Total	**3.551**	**10.069**	**0.000**	**7.050**	**0.000**	**0.000**

Table 8-1. MCS IM Investment and Procurement Funding

MCS Insensitive Munitions (IM) Investment Funding & Associated Costs ($K)						
Associated Funding Requirements	**FY08**	**FY09**	**FY10**	**FY11**	**FY12**	**FY13**
Hardware (Assets)	0.750	0.000	0.000	0.000	0.000	0.000
Technology Development	1.466	0.000	0.000	0.000	0.000	0.000
Engineering Assessment	0.500	0.000	0.000	0.000	0.000	0.000
Qualification Testing	0.750	0.000	0.000	0.000	0.000	0.000
Requalification Testing	0.000	0.000	0.000	0.000	0.000	0.000

Table 8-2. MCS IM Investment Funding and Associated Costs

8.2 UNFUNDED REQUIREMENTS

Table 8-3 represents the unfunded requirement associated with the MCS.

Tier II MCS Insensitive Munitions (IM) and Investment Funding ($K)						
Funding	**FY08**	**FY09**	**FY10**	**FY11**	**FY12**	**FY13**
MCS-SD Effort[1]	0.000	0.000	0.000	0.000	0.000	0.000
MCS-SCJ Effort[2]	0.000	0.000	1.000	2.500	1.500	2.000
Total	**0.000**	**0.000**	**1.000**	**2.500**	**1.500**	**2.000**
[1]Funding effort to address SD shortfalls has not been determined.						
[2]Funding effort to address SCJ shortfalls is estimated between $2-7M.						

Table 8-3. MCS IM and Unfunded Investment

Concurrence on MK1, MK2 and MK22 Mine Clearance System (MCS) Insensitive Munitions (IM) Plan of Action and Milestones

Purpose of Plan of Action and Milestones: This Plan of Action and Milestones (POA&M) establishes a baseline plan to improve the IM characteristics of the MK 1, MK 2 and MK22 Mine Clearance System (MCS), to include the MK22 Rocket Motor (RM), when subjected to unplanned stimuli.

Submitter:

Capt Mark L. Hobin
Assistant Program Manager, Linear Charges and Demolition
Marine Corps Systems Command (PMM2041)

Concurrence:

Mr. Troy K. Wright
Division Head, Ammunition Programs and Budget Division (AP&BD)
Marine Corps Systems Command (PMM2041)

Approval:

Mr. Jerry L. Mazza
Program Manager for Ammunition
Marine Corps Systems Command (PM204)

Executive Summary

Mine Clearance System (MCS): Tier II

The Program Manager for Ammunition (PM Ammo), Marine Corps Systems Command (MCSC) has been actively involved with the quest for Insensitive Munitions (IM) technology for several years. Although many of the items used by the Marine Corps are procured through the Single Manager for Conventional Ammunition (SMCA), several are under the direct item configuration control of PM Ammo. Therefore, PM Ammo, MCSC, has a vested interest in developing strategic plans for incorporating current technology into the items under the configuration management of the United States Marine Corps (USMC) as well as working with industry on future efforts to advance safety to our war-fighters.

Marine Air-Ground Task Forces (MAGTFs) must be capable of expeditionary operations across the operational continuum. To project power ashore during a crisis situation, it is critical that the deployed MAGTF be able to conduct an amphibious assault and continue operations ashore. Tactical maneuver capability during the initial assault and during subsequent operations is a key factor toward combat success. To sustain an offensive capacity, a system capable of defeating the enemy's counter-mobility efforts is a must. Currently the Mine Clearance System (MCS) is a rocket-towed, linear demolition charge (LDC) and is the USMC's premier system for this mission and is capable of providing a clear path for combat vehicles during minefield and barrier breaching operations. The MK22 Rocket Motor (RM), which is used to deploy the LDC, is a tractor RM that uses a cartridge loaded, N-5, double base propellant. Together, the MK22 and the LDC make up the MCS capability to clear a path up to 46-feet wide and 350-feet long through a minefield. Though the system has had functional changes made to increase reliability, the main energetic of the systems have remained unchanged since initial fielding in 1968. The MK22 RM propellant transitioned from N-4 to N-5 with the change from MK22 MOD 2 to MK22 MOD 3 in 1983 (the material is still double base in nature). Another change due to the transition of propellant was the MK22 MOD 3 from 2 (1 watt/1 Amp) initiators and a black powder-magnesium igniter to in the MK22 MOD 4 to 1 (1 watt/1 Amp) $BKNO_3$ igniter and Magnesium-Teflon-Viton (MTV) initiator. At present, new technologies have been evaluated to transition into the systems which will improve the IM characteristics incrementally.

The USMC uses Procurement of Ammunition, Navy and Marine Corps (PANMC) dollars to meet the Approved Acquisition Objective (AAO) set forth by the Total Munitions Requirement (TMR) published by Commanding General, Marine Corps Combat Development Command (CG MCCDC). The LDC (M58A3 (M913) or M59A1 (ML25)) and the RM (MK22 MOD 4 (J143)) are procured through the SMCA, Joint Munitions Center (JMC) Rock Island, Illinois. The MCS is a joint program with the Army; however the Marine Corps is the only Procuring Agency at present and has assumed Life Cycle Management for the systems. The program office has no Research and Development (R&D) funds; IM improvements have been limited; forcing PM-Ammo to seek help from various other government entities. PM Ammo has entered into a Technology Transition Agreement (TTA) with the Office of Naval Research (ONR). Execution of the TTA in support of the MCS's Plan of Action and Milestones (POA&M) began in FY2005.

ONR obligated $1.025M in Research and Development (R&D) funds in FY2005 and $1.2M in FY2006, with matching funding of $0.35M for FY2005 and $0.375M for FY2006, $0.8M for FY2007 from PM-Ammo for non-S&T related efforts, to start the initial pursuit of IM alternatives, evaluate these alternative materials and also evaluate other IM solutions. This effort has required 24 months to determine the IM improvements for the LDC that are available and there is still another 6-12 months needed to complete possible technology enhancements to improve the RM's IM characteristics while maintaining or improving functionality for MCS. PM-Ammo will fund the IM technology application and system qualification. For the qualification of these systems and the procurement of the improved IM LDC and IM RM, PM-Ammo funding of $1.3M was received in FY2007 and is expected to fund $3.466M for FY2008/FY2009 for production and qualification of the M58/M59 and the MK22 RM.

It is the goal of the Program Office (PO) for achieving IM compliance at the earliest possible date. The activities and the status of the efforts to attain this goal will be described in detail through this POA&M.

ONR obligated $1.025M in Research and Development (R&D) funds in FY2005 and $1.2M in FY2006, with matching funding of $0.35M for FY2005 and $0.375M for FY2006, $0.8M for FY2007 from PM-Ammo for non-S&T related efforts, to start the initial pursuit of IM alternatives, evaluate these alternative materials and also evaluate other IM solutions. This effort has required 24 months to determine the IM improvements for the LDC that are available and there is still another 6-12 months needed to complete possible technology enhancements to improve the RM's IM characteristics while maintaining or improving functionality for MCS. PM-Ammo will fund the IM technology application and system qualification. For the qualification of these systems and the procurement of the improved IM LDC and IM RM, PM-Ammo funding of $1.3M was received in FY2007 and is expected to fund $3.466M for FY2008/FY2009 for production and qualification of the M58/M59 and the MK22 RM.

It is the goal of the Program Office (PO) for achieving IM compliance at the earliest possible date. The activities and the status of the efforts to attain this goal will be described in detail through this POA&M.

Executive Summary

Mine Clearance System (MCS): Tier II

The Program Manager for Ammunition (PM Ammo), Marine Corps Systems Command (MCSC) has been actively involved with the quest for Insensitive Munitions (IM) technology for several years. Although many of the items used by the Marine Corps are procured through the Single Manager for Conventional Ammunition (SMCA), several are under the direct item configuration control of PM Ammo. Therefore, PM Ammo, MCSC, has a vested interest in developing strategic plans for incorporating current technology into the items under the configuration management of the United States Marine Corps (USMC) as well as working with industry on future efforts to advance safety to our war-fighters.

Marine Air-Ground Task Forces (MAGTFs) must be capable of expeditionary operations across the operational continuum. To project power ashore during a crisis situation, it is critical that the deployed MAGTF be able to conduct an amphibious assault and continue operations ashore. Tactical maneuver capability during the initial assault and during subsequent operations is a key factor toward combat success. To sustain an offensive capacity, a system capable of defeating the enemy's counter-mobility efforts is a must. Currently the Mine Clearance System (MCS) is a rocket-towed, linear demolition charge (LDC) and is the USMC's premier system for this mission and is capable of providing a clear path for combat vehicles during minefield and barrier breaching operations. The MK22 Rocket Motor (RM), which is used to deploy the LDC, is a tractor RM that uses a cartridge loaded, N-5, double base propellant. Together, the MK22 and the LDC make up the MCS capability to clear a path up to 46-feet wide and 350-feet long through a minefield. Though the system has had functional changes made to increase reliability, the main energetic of the systems have remained unchanged since initial fielding in 1968. The MK22 RM propellant transitioned from N-4 to N-5 with the change from MK22 MOD 2 to MK22 MOD 3 in 1983 (the material is still double base in nature). Another change due to the transition of propellant was the MK22 MOD 3 from 2 (1 watt/1 Amp) initiators and a black powder-magnesium igniter to in the MK22 MOD 4 to 1 (1 watt/1 Amp) $BKNO_3$ igniter and Magnesium-Teflon-Viton (MTV) initiator. At present, new technologies have been evaluated to transition into the systems which will improve the IM characteristics incrementally.

The USMC uses Procurement of Ammunition, Navy and Marine Corps (PANMC) dollars to meet the Approved Acquisition Objective (AAO) set forth by the Total Munitions Requirement (TMR) published by Commanding General, Marine Corps Combat Development Command (CG MCCDC). The LDC (M58A3 (M913) or M59A1 (ML25)) and the RM (MK22 MOD 4 (J143)) are procured through the SMCA, Joint Munitions Center (JMC) Rock Island, Illinois. The MCS is a joint program with the Army; however the Marine Corps is the only Procuring Agency at present and has assumed Life Cycle Management for the systems. The program office has no Research and Development (R&D) funds; IM improvements have been limited; forcing PM-Ammo to seek help from various other government entities. PM Ammo has entered into a Technology Transition Agreement (TTA) with the Office of Naval Research (ONR). Execution of the TTA in support of the MCS's Plan of Action and Milestones (POA&M) began in FY2005.

ONR obligated $1.025M in Research and Development (R&D) funds in FY2005 and $1.2M in FY2006, with matching funding of $0.35M for FY2005 and $0.375M for FY2006, $0.8M for FY2007 from PM-Ammo for non-S&T related efforts, to start the initial pursuit of IM alternatives, evaluate these alternative materials and also evaluate other IM solutions. This effort has required 24 months to determine the IM improvements for the LDC that are available and there is still another 6-12 months needed to complete possible technology enhancements to improve the RM's IM characteristics while maintaining or improving functionality for MCS. PM-Ammo will fund the IM technology application and system qualification. For the qualification of these systems and the procurement of the improved IM LDC and IM RM, PM-Ammo funding of $1.3M was received in FY2007 and is expected to fund $3.466M for FY2008/FY2009 for production and qualification of the M58/M59 and the MK22 RM.

It is the goal of the Program Office (PO) for achieving IM compliance at the earliest possible date. The activities and the status of the efforts to attain this goal will be described in detail through this POA&M.

1. INTRODUCTION

1.1 PURPOSE

The purpose of this Plan of Action and Milestones (POA&M) is to establish the Mine Clearance System (MCS) Insensitive Munition (IM) compliance baseline, provide the latest IM information for the current configuration and define the strategy for ensuring future MCS procurements are IM compliant in accordance with (IAW) MIL-STD 2105C.

1.2 BACKGROUND

The United States Marine Corps (USMC) requires a reliable, safe and effective system for clearing mines. The MCS rocket projected explosive line charge provides a "close-in" breaching capability for maneuvering forces. The MCS is effective against conventionally fuzed mines. The MCS has been in production since 1975 and has undergone many product improvements effecting reliability and system performance. During this period, improvements to IM characteristics have not been adequately addressed. The MCS system does not meet the current Department of Defense (DoD) requirements for resistance to IM threats (unplanned stimuli). New technology is required to improve the employment of the MCS and support power projection for current and future Naval operations.

MCS is a Joint Army/Marine Corps program procured through the Joint Munitions Command (JMC) Single Manager for Conventional Ammunition (SMCA), with the life cycle management responsibilities having been assumed by the USMC. MCS have been incorporated in the past two (2) Insensitive Munitions Strategic Plan (IMSP) submission cycles, covering FY2005-06 and FY2007-08.

1.3 SCOPE OF WORK

IM testing is scheduled to be part of the munitions qualification process, in IAW MIL-STD-2105C. However, due to the immaturity of the program at this time, formal test planning has not occurred. Formal test planning will take place after the contract has been awarded which is tentatively scheduled for 2QtrFY2008.

1.3.1 Program Status

The objective of this effort is to significantly improve the IM characteristics, reliability and operational performance of the MCS through a staged, evolutionary product improvement program (PIP). The final result will be a qualified system with a complete Technical Data Package (TDP), which is operationally and technically suitable and producible for continued fielding to the USMC existing programs.

The IM improvements effort has and will continue to come from an Integrated Product Team (IPT), engineering support, and participation by other Government agencies. After reviewing the IM test history for the existing MCS, it is evident the current system needs improvement. These improvements may consist of less sensitive explosives and propellants, improved packaging, other systematic modifications, or a combination of each. The MCS will be evaluated for selected root cause failure analysis and identification of suitable corrective action(s) through detailed Engineering Change Proposals (ECPs) to the existing MCS TDP,

which will be reviewed and approved by the Government. Testing at the component and/or subsystem level to demonstrate improved design characteristics must be identified and executed.

The MCS will be tested to demonstrate compliance with IM requirements; identification of the proposed technologies to be addressed (e.g. explosives, rocket motor (RM), fuze, packaging, containerization, assembly modifications, etc.) and the maturity of the technology (e.g., Technology Readiness Level (TRL)). Explosives proposed for use in this system will be evaluated to ensure they can be, or are, Qualified for Navy use per Naval Sea Systems Command Instruction (NAVSEAINST) 8020.5C and can be approved for MCS.

2. PROGRAM MANAGEMENT

2.1 ORGANIZATION

Table 2-1 represents those Points of Contact (POC) for MCS.

Points of Contact		
Name	Organization	Title
Capt Mark Hobin	MCSC (PMM2041)	Assistant Program Manager for Ammunition
Mr. Troy K. Wright	MCSC (PMM2041)	Head, Ammunition Programs and Budget Division

Table 2-1. Program Management for MCS

2.2 IM POINTS OF CONTACT

Table 2-2 represents those IM POCs for MCS.

IM Points of Contact		
Name	Organization	Title
Mr. Robert S. Hutcheson	NAVSEAIHDIV (E312F)	Fuze and Warhead R&D Engineer
Mr. Scott Allred	MCSC (00T1)	Marine Corps Weapons/Munitions Integrator

Table 2-2. IM POCs for MCS

3. SYSTEM DESCRIPTION

3.1 COMPLETE DESCRIPTION

3.1.1 M59A1 (DODIC ML25) or M58A3 (M913) LDC

The M59A1 (DODIC ML25) or M58A3 (M913) Linear Demolition Charge (LDC), in conjunction with the MK22 MOD 4 (J143) RM, and M1134 Fuze (ML82) (shipped disconnected from the LDC) make up either the MK1 or MK2 MSC systems. Both are a rocket-towed LDC, designed to provide a clear path for combat vehicles during minefield and barrier breaching operations. The MCS is capable of clearing a path up to 46-feet wide and 350-feet long through a minefield.

The total unpacked length of the LDC (M58 or M59) is 555-feet. The demolition section provides the explosive force and is 350-feet long. The arresting cable is a nylon rope providing a standoff distance between the vehicle and the explosion. The arresting cable is 205-feet long.

The demolition section consists primarily of a 3/4-inch nylon core rope, 700 blocks of Composition C4 demolition blocks and eight strands of Pentaerythritol Tetranitrate (PETN) detonating cord. The total explosive weight of the demolition blocks is 1,750 pounds. The blocks are attached to the core rope similar in appearance to a linked sausage. The blocks are sheathed with an outer layer of nylon. The two (2) strands of detonating cord pass through the entire length of the demolition section and use relay cups loaded with PETN at each of the three interfaces and between the fuze and input to the LDC for a total of 18 relay cups for the system. The demolition section and the arresting cable are coiled inside the container. Most of the arresting cable is beneath the demolition section. The fuze, which is packaged, is normally on top of the coiled demolition section.

The only variant between the M59 and M58 is the packaging configuration, as shown in Figure 3-1, and the launch platform. The M58 configuration is loaded onto a MK155 trailer towed behind an armored vehicle or fired from the Assault Breaching Vehicle (ABV). The M59 configuration is loaded onto the Amphibious Assault Vehicle (AAV) for transportation and employment.

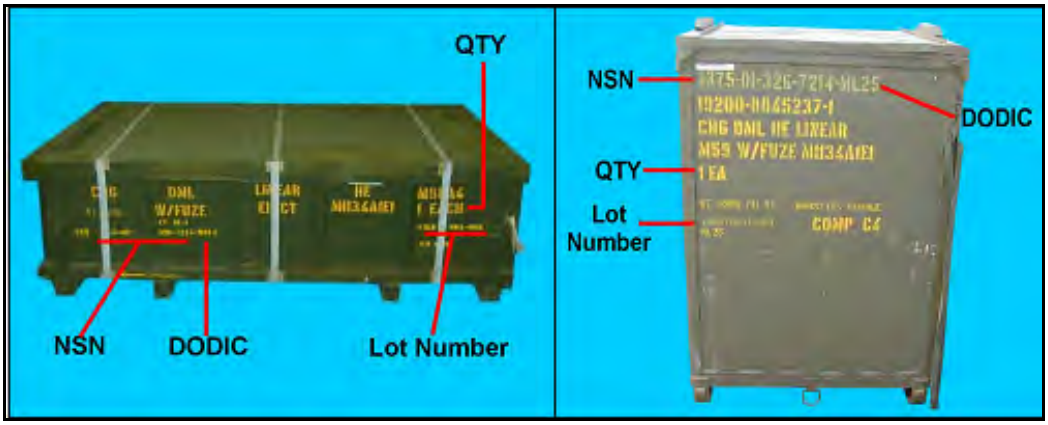

Figure 3-1. Packaged M58A3 (M913) on left and M59A1 (ML25) on right

For Official Use Only

3.1.2 MK22 MOD4 RM Description

The RM, MK22 MOD 4 (DODIC J143) is a solid-fuel motor used for towing M58, M59, M68A2, and M69 LDCs into the air over obstacles or minefields for breaching, training or test applications; see Figure 3-2.

The RM is approximately 77-inches long, 5-inches in diameter, weighs 128 pounds, and contains 42 pounds of N-5 double based propellant. It has a tractor motor design which incorporates two forward mounted, rearward facing, exhaust nozzles which are threaded into the motor head-cap.

There is a MOD 3 RM, which is approximately the same size and weight as the MOD 4 and has virtually identical performance characteristics. The main difference between the two is that MOD3 is a pusher type, having a single rear-mounted exhaust nozzle. The other difference in the two rocket modifications is the MK22 MOD 3 uses two (1 watt/1 Amp) initiators and a black powder-magnesium igniter and the MK22 MOD 4 uses one (1 watt/1 Amp) initiator and $BKNO_3$ igniter. The MOD 3 configuration is obsolete and is used only for training and test applications.

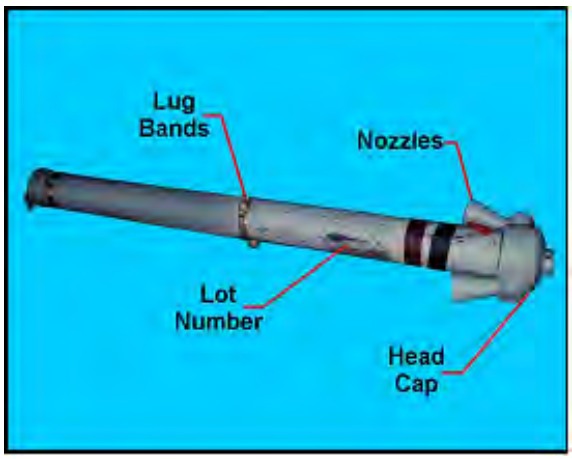

Figure 3-2. MK22 MOD 4 RM

3.1.3 M1134A4 Electric Demolition Fuze

The M1134A4 Fuze is designed to detonate the M58 and M59 series LDC. The fuze is connected between the fuze connector front half on the charge and the fuze connector rear half on the arresting cable. The fuze is placed in the fuze holder container after connections are made. The RM is initiated and pulls the charge out of the container and fuze from the fuze holder. The extraction of the arming pin occurs when the arresting cable halts the forward motion of the charge and RM. The tension on the arming wire, which is woven into the arresting cable, provides the force necessary to break the fuze shear pin and extract the arming pin. Extracting the arming pin enables the fuze rotor to rotate, opening two micro switches completing an electrical circuit to the fuze circuit board.

After the charge has been deployed, the fuze is command initiated using a blast machine or other direct current power supply. The electrical current is applied to the selector switch/assembly control box, which will continue through the arresting cable to the fuze connector. The electrical charge will enter the fuze passing through the closed micro switches to the circuit board timer. The circuit board timer will send a controlled electrical pulse to the explosive bellows motors, which will initiate, expand, and rotate the rotor, aligning the firing leads with the detonators.

The circuit board timer electrical pulses will then initiate the firing leads, which will initiate the fuze detonators, blowing through the base of the fuze, initiating relay cups crimped to detonating cord, and initiating the C-4 blocks on the LDC.

3.2 Energetic Material

Table 3-1 breaks down the main energetic components, Hazard Classification (HC), and packing data associated with the MK1 and MK2, MCS.

Explosive Components Main Charge-MCS (M58A4/M59A1)		
Component	**Explosive**	**Weight**
Main Charge	Composition C-4 Class III	1750 lbs. (nominal)
Detonating Cord	(2) PETN (90 gr/ft@476 ft)	16.35 lbs.
Relay Cups	PETN (390 mg each (16))	6.24 g
Explosive Components Main Charge-MCS (M58A4E1/M59A1E1)		
Component	**Explosive**	**Weight**
Main Charge	Composition C-4 Class III	1750 lbs. (nominal)
Detonating Cord	(2) PBXN-8 (120 gr/ft@477 ft)	16.35 lbs.
Relay Cups	Comp A-5 (390 mg each (4))	1.56 g
Explosive Components Rocket Motor MK22 Mod 4-MCS		
Propellant	N-5, Double Based	42 lbs.
Electrical Initiator	Bridgewire Comp 500486	65 mg
	Initiator ($BKNO_3$)	220 mg
Igniter	Igniter Charge (MTV)	48 g
Explosive Components Rocket Motor EX22 Mod 5-MCS		
Propellant	N-5, Double Based	42 lbs.
Electrical Initiator	Bridgewire Comp 500486	65 mg
	Initiator ($BKNO_3$)	220 mg
Igniter	Igniter Charge (MTV)	48 g
Rita	$BKNO_3$	220 mg
	Primer PVU-1/A (Primer Mix 5086)	21 mg
Explosive Components Fuze-MCS		
Bellows	Ignition Charge (ZPPV)	15 mg
	Gas Producer (Single-base Smokeless Powder)	15.2 mg
Detonators (2)	Ignition Charge (ZPPV)	60 mg each
	Intermediary Charge (Lead Azide, RD)	70 mg
	Output Charge (PETN)	140 mg each
Leads (2)	Charge (Comp A-5)	642 mg each

Table 3-1. Energetic Material and Components for MCS

3.2.1 Packaging

The rocket is stored in a separate wooden container, while the M59 or M58 and the fuze are packed in a metal box. When packed, the fuze is disconnected. According to the doctrine, it could be assembled earlier; if assaulting the beaches. See Figure 3-3 for further information.

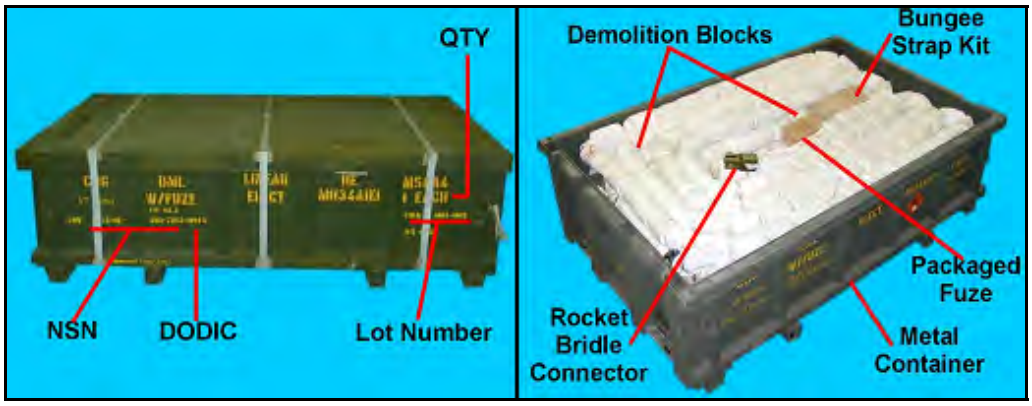

Figure 3-3. M58A3 (M913) Packaging Description

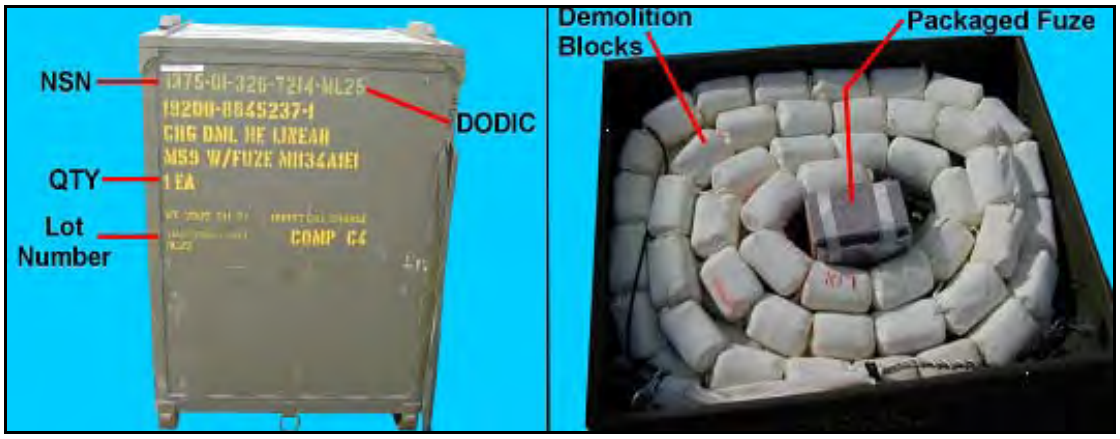

Figure 3-4. M59A1 (ML25) Packaging Description

Figure 3-5. MK22 MOD 4, (J143) RM Packaging Description

Figure 3-6. M1134A4 Electric Demolition Fuze Packaging Description

3.3 FUNCTIONAL DESCRIPTION

The MK1 and MK2, MCS is used to clear a path for tanks, vehicles and personnel through minefields or other obstacles. Its deployment platforms vary based on which MK is being used. The MK1 MOD 0 consists of three (3) rocket-deployed line charges mounted inside an AAV. The MK2 MOD 0 is currently deployed from the ABV and MK155 Trailer towed behind any armored/tracked vehicle. Both MK1 and MK2 use the MK22, J143 RM for towing the line charges into the air, over blast obstacles or minefields for breaching, training or test applications.

3.3.1 Functional Description: MK1 (M59) and MK2 (M58)

The MK1 MOD 0 three shot mine clearance system is an AAV mounted, self-contained system which operates on vehicle slave electrical power and is capable of clearing a path up to 46-feet wide and 350-feet long through a minefield. The LDC is effective against single-impulse, pressure-type, and non-blast hardened antitank mines. The line charge creates an over-pressure, which causes pressure-type fuzes to function. Mines, which have not detonated, will usually be uncovered or blown from the ground after detonation. Major components include the linear demolition charge, RM, launcher, capstan, support rails, and ramps.

The MK2 MOD 0 single shot mine clearance system is capable of clearing a path up to 15 yards wide and 109 yards long through a minefield. Effective against single-impulse, pressure-type, non-blast hardened antitank mines and mechanically actuated antipersonnel mines. The line charge creates an over-pressure, which causes pressure-type fuzes to function. Mines, which have not detonated, will usually be uncovered or blown from the ground after detonation. Major components include: LDC, RM, launcher and trailer. Other than the container, the two (2) MK1 and MK2 LDCs are identical.

3.3.2 Functional Description: MK22 MOD4 RM

The MK22 MOD 4 RM used with the MK2 MOD 0 and MK1 MOD 0 MCS has been specifically designed to tow the tactical M58, M59 and the inert training models; M68 and M69.

3.3.3 Functional Description: M1134A4 Fuze

The M1134A4 fuze initiates the M58 and M59 LDC.

3.4 COMPONENT LIST AND DESCRIPTION

The component list and description of the MCS consists of the following. For further information of energetic components, HC and packaging data associate with MCS, refer to Table 3-1.

- AAV (for MK 1 only)
- Trailer/ABV (for MK 2 only)
- Launcher, MCS, MK154-AAV version and MK155 Trailer Mounted Version
- RM, MK22 MOD4
- Fuze, M1134A4
- LDC, M59 (MK1) or M58 (MK2)

4. THREAT HAZARD ASSESSMENT (THA) SUMMARY

4.1 PROJECTED THREAT ENVIRONMENT

The credible hazardous environments to which the MCS might be exposed are mechanical shock environment produced by drops and rough handling which might occur during loading and handling, thermal environments produced by fires which might occur during transportation and shipboard deployment [Fast Cook-off (FCO) and Slow Cook-off (SCO)], explosive shock environment produced by the detonation of an adjacent weapon [Sympathetic Detonation (SD)], and impact environments produced by Bullet Impact (BI), Fragment Impact (FI) and Shaped Charge Jets (SCJ). Credible hazard environments also include HERO and Electro-static Discharge (ESD). Because of the FTTS and the concept of operation of the MCS, Shaped Charge Spall Impact (SCSI) is not considered to be a credible threat.

4.2 PLANNED LOGISTICAL AND TACTICAL LIFE-CYCLE PROFILE (SUMMARY)

The MCS is deployed by the USMC. Normal operating environments include temperatures ranging from -25ºF to 140ºF and extremes of storage temperature range from -40ºF to 160ºF. The RM requirement for operation is -40ºF to 125ºF and the same for storage. Climates to be encountered during the fielding of this weapon system range from desert to arctic and all conceivable environments in-between.

Some extreme environments are not included in the Factory to Target Sequence due to the extremely remote probability of occurrence. The most extreme of these environments are those concerned with nuclear exposure and fungus growth. There is no guarantee that this weapon will not be exposed to a nuclear environment. However, the likelihood of this is considered to be extremely remote, and, therefore, no nuclear environment testing is planned.

4.3 RECOMMENDED TESTS

Based upon the THA, both the MK1 and MK2 MCS can expect to be exposed to the same IM threats. Three (3) MK1 MCS's are mounted in the AAV. Both the skin of the AAV and the MK1 container are aluminum, offering minimal protection from threat stimuli. The MK2 is either towed as a single unit on a trailer, or two units will be mounted on the ABV. The MK2 container is manufactured from light steel. The fuze is located in the MCS container, but is not connected to the line charge until just prior to deployment. The RM is carried in its wooden crate until configured for launch on the launch rail. There are two (2) basic configurations of the LDC: transportation configuration and usage configuration.

- Transportation: LDC is in its closed container. Fuze is inside the container, but is not attached to the line charge. The RM is in its wooden shipping container, external to the LDC container.
- Usage: LDC is in its open container with the fuze attached. The RM is assembled to the launch rail, above the container, and is physically connected to the LDC by the steel/nylon cable intertwined within the detonating cord.

Based upon the evaluation, credible IM threats include:

- FCO: Because the system is designed to be transported in both the transportation and usage configurations, the MCS can be subjected to a fuel fire in either configuration. The distance from the RM to the LDC is sufficient that the reaction of one is not likely to affect the other. Only during storage, the RM is a couple of feet away from the M58 and M59 LDC.
- SCO: Threat of being exposed to heat generated by a fire during transportation and storage. Credible SCO threat to the MCS is in the transportation configuration.
- BI: Greatest threat is being inadvertently struck by a bullet is in the usage configuration though it may be a credible, though lesser, threat in the transportation configuration. Potential threat is all caliber rifle ammunition.
- FI: Greatest threat is in the usage configuration though it may be a credible, though lesser, threat in the transportation configuration. Most credible threat is 6,000 ft/sec fragment, happening in the usage configuration. Limited exposure to 8,300 ft/sec fragment will be during loading and unloading operations on a ship.
- SD: Threat of exposure to unplanned stimuli is equally likely when the MCS is either in the transportation or usage configurations, though the configuration is similar enough that there is little difference in SD test set-up.
- SCJ: Potential for being exposed to SCJ is highest during the usage configuration, though the probability of being subjected to these stimuli is also possible during transportation and storage.

Based upon this discussion, recommended tests for LDC:

- FCO-In transportation configuration.
- SCO-In transportation configuration.
- BI-.50 Cal AP In transportation configuration.
- FI-8,300 ft/sec fragment in the transportation configuration.
- SD-One test in transportation configuration, layout as in the Anti-Armor Vehicle (AAV).
- Second test in usage configuration, layout as on ABV.
- SCJ-One test, conducted in transportation configuration.

Based upon this discussion, recommended tests for RM:

- FCO-In transportation configuration.
- SCO-In transportation configuration.
- BI-Cal .50 AP into bare RM.
- FI-8,300 ft/sec fragment in the transportation configuration.
- SD-One test with rockets in transportation configuration.
- SCJ-One test, conducted in transportation configuration.

5. IM TEST RESULTS

5.1 IM TEST CONDITIONS

The IM test conditions were previously noted and documented in Paragraph 4.3 of this Plan. The System Safety Program Plan (SSPP) and the test plan were coordinated with the Naval Ordnance Safety and Security Activity (NOSSA) prior to execution. The IM tests were subsequently scored by the NOSSA and concurred with by JSIMTP. The results of the testing were reviewed by the Insensitive Munitions Council on 10 June 2004 and concurred with by that council. The results were then provided to each Service and were concurred with during the IM waiver process. The IM waiver was briefed to the Joint Requirements Panel (JRP) on 19 November 2004 and to the Joint Requirements Board (JRB) on 27 November 2004. The Joint Requirements Oversight Council (JROC) approved the waiver on 5 February 2005.

5.2 TEST RESULT SUMMARY

Table 5-1 represents the IM test result summary as assessed for baseline.

MCS IM Maturation Based on Funded Tier II Program																
	Baseline							Projected								
	FCO	SCO	BI	FI	SD	SCJ	H/C	FCO	SCO	BI	FI	SD	SCJ	Project H/C	Fiscal Year	Remaining IM Invest ($M)
MK1/MK2 (M59/M58)[1]	V	V	I	I	F	(F)[5]	1.1D	V	V	(V)[7]	V[8]	F	(F)[5]	(1.1D)	FY09	$3.46M
M1134A4	V	(V)	V	V	(P)			V	(V)	V	V	(P)	UKN			
MK22 MOD 4[2]	V	III	V[6]	III[4]	P[3]	UKN[5]	1.3C	V	(IV/V)[9]	V[6]	(III/V)[9]	P[3]	UKN[5]	(1.3C)	FY09	

Note: UKN is abbreviated for "Unknown."

[1]M58 and M59 were evaluated by OHEB 22 May 2002 in accordance with "Hazard Assessment Tests for Non-Nuclear Munitions," MIL-STD-2105B.

[2]OHEB did not review test data for the MK 22 Rocket Motor. Testing on the MK 22 Rocket met the requirements of the WR-50 in 1983. Since then, FI were done in accordance with MIL-STD-2105B.

[3]The MK 22 Rocket has a hazard classification of 1.3C and no SD was conducted. Reference Source Data: MIL-STD-2105B 5.2.5.1 SD Description of Test.

[4]FI for the Rocket motor was scored by IMRB on 26 Sept 07.

[5]SCJ for M58/M59 is based on FI. SCJ for Rocket not part of THA but likely to fail.

[6]Rocket passed WR-50 requirement for BI in Mod 3 and DOD-STD-2105 for Mod 4 using 20-mm projectiles.

[7]IMRB scored the test results for the all-up improved M58 as a NO Test due to not meeting the requirements of MIL-STD-2105C, but did score the sub-scale tests w/o detonating cord as Type V reaction. Also FI with the new detonating cord, relay cups and shield was a Type V reaction.

[8]IMRB on 26 Sept 07 scored this test using new detonating cord, relay cups and shield as a Type V reaction

[9]Corrections for SCO and FI for the Rocket motor has not been addressed. The goal would be an improvement of Type III reaction to Type IV-V reaction.

Table 5-1. IM Test Results for MCS

5.3 IM BOARD RECOMMENDATIONS

On 23 January 2007, the MCS brief the JSIMTP on the program status. The board's findings were as follows:

- There is significant potential for improvement demonstrated through the combination of energetics change in the detonation cord and ballistic mitigation.
- The MCS Program should include a SCJ assessment in the scoring summary, to include quantifying RM SCJ reaction.

6. IM TECHNICAL APPROACH

6.1 PREVIOUS IM EFFORTS

MCS is a joint Army/Marine Corps program procured through the JMC SMCA, with the life cycle management responsibilities having been assumed by the USMC. PM Ammo in FY2002 set aside $2M in funding to conduct baseline testing in accordance with MIL-STD 2105B to assess the systems IM responses, these responses are captured in Table 5-1 above. MCS is a legacy system funded for procurement across the Fiscal Year Defense Plan (FYDP). The program office has implemented a Technology Transition Agreement (TTA) to address the systems shortfalls with regard to IM.

On 24 June 2004, the JSIMTP was encouraged with the Marine Corps' effort to be in concert with Office of Naval Research (ONR) and the fact that they are entering into a TTA, which has identified over $1M in FY2005 funding to pursue IM technology enhancements for the MCS. Listed below are actions that have taken place:

- The JSIMTP suggested the Program Office (PO) consider taking a trade study approach to identify IM solutions while executing the TTA.
- JROC 1 February 2005 approved an IM Waiver for production through FY2006.
- MCS was rolled into the Marine Corps IMSP during February 2005 and February 2006 (FY2005/06 and FY2007/08 submissions.

The MCS TTA is nearing the end of its second year of funding. During the In-Process Review (IPR) in May 2006, plans were identified to demonstrate the improved IM characteristics of the system with upgraded features that included a new detonation cord and transfer cup assembly components for the linear demolition charge, a venting design and Rocket Igniter Thermally Actuated (RITA) system for the MK22 RM and improved shielding for the M58 and M59 logistic container. Results of these demonstration tests and the planned IM qualification testing will be provided in the next update to this plan. A Letter Data Package (LDP) with proposed energetic changes will be drafted for consideration by the Weapon System Explosives Safety Review Board (WSESRB).

6.2 FUTURE IM EFFORTS

Due to the lack of Research Development Test and Evaluation (RDT&E) money available at PM Ammo, the program office partnered with the ONR through a TTA. PM Ammo's funding is limited to PANMC funds; restricting the development of IM advancements. ONR has agreed to the proposed Rough Order of Magnitude (ROM) with a project timeline of 24 to 36 months and an estimated cost of $6.65M beginning in FY2005. The ONR funded work will culminate in system demonstration testing conducted in FY2006, FY2007 and possibility early FY2008. Additionally, PM Ammo has $3.466M for the development and procurement of IM Linear Charges for future testing. Results of these T&E activities and implications for system-level IM improvements will be provided in the next plan update.

6.2.1 SD IM Effort

The MCS has struggled with SD since it's initially conception. Due to the size and weight issues associated with the MCS, passing SD will continue to be problem if S&T and IM funding is not received to address such issues. Experts who have done previous work feel that the MCS needs a 2.5 ft gap to prevent detonation between each line charge. Future efforts in the area of SD will continue to be pursued as follow-on funding is received.

6.2.2 SCJ IM Effort

Another area the MCS has struggled in the IM arena is SCJ. Engineers have concluded that in order to pass SCJ a new explosive needs to be qualified and extrudable. To complete such a task it has been estimated to cost between $5-7M, depending on the test program. Such a variation in cost is due to making such major changes to the system; therefore a need for numerous systems to final type qualify the system, which are costly. If the PO determines the need to just find a material which would pass SCJ, meeting system requirements; would likely reduce the cost to $2-3M. A trade-off of system requirements and IM would have to be made to see if we can pass SCJ, but are not initiated by the detonating cord, still meet the current system requirements for input and output.

6.3 Technology Requirements

Initial testing has shown that the MCS will require a change in the explosive transfer mechanism of the system (Detonation Cord) and it is unlikely the energetic main charge can be can be changed due to funding limitations to mitigate unacceptable reactions to BI, and FI hazards. Additionally, the applications of shielding materials to the shipping/storage container to reduce responses to these external stimuli must be included for the LDC to reduce the IM hazard reaction levels for BI and FI.

It is anticipated that the RM will require a venting system and an initiation system to ignite the MK22 RM to reduce the effects of the SCO configuration. Initial testing shows that venting alone will not prevent auto-ignition of the rocket during SCO. An approach to meeting SCO requirements has been devised to allow safe, controlled venting of both ends of the RM and then initiate burning on the bore surface before auto-ignition. This approach will allow the MK22 to meet both the letter and spirit of the SCO requirements.

7. SCHEDULE

7.1 MILESTONE AND PROGRAM STATUS

Below in Table 7-1, is an overview of the various milestones the MK1 and MK2, MCS has accomplished over the programs existence.

MCS Milestones/Program Status	
CDR for M58/M59 Production	2QtrFY08
Contract with Rock Island for M58/M59	2QtrFY08
Qualification of M58/M59[1, 2]	FY08/FY09
PDR for M22 Rocket	4QtrFY07
Demonstration of Mk22 Rocket	2QtrFY08
CDR for Mk22 Rocket (w RITA) Production	2QtrFY08
Production of MK22 for Qualification	3Qtr-4QtrFY08
Qualification of MK22[1, 2]	4QtrFY08-3QtrFY09
[1]Flight tests of the M58/M59 will use the new IM MK22 Rockets for Qualification. Therefore Rocket Qualification may have to wait on LDC production and environmental testing before flight tests occur to finish qualification of M58/M59/MK22.	
[2]Funding availability may also delay the completion of Qualification.	

Table 7-1. Milestone and Program Status for MCS

9. BUYS/PROCUREMENTS

9.1 PROCUREMENT QUANTITIES

The MK1 and MK2, MCS program has no more anticipated procurement quantities in the current budge cycle. Table 9-1 depicts the quantities for the M58, M59 and MK22.

MCS Procurement Quantities						
Procurement Service	**FY08**	**FY09**	**FY10**	**FY11**	**FY12**	**FY13**
Army						
Air Force						
Marine Corps-M59	0	187	0	0	0	0
Marine Corps-M58	0	0	0	0	0	0
Marine Corps-MK22	0	370	0	0	0	0
Navy						
SOCOM						
Total	**0**	**557**	**0**	**0**	**0**	**0**

Table 9-1. MCS Planned Procurement Quantities

10. IMPACT

10.1 CONSEQUENCE OF REACTION

Due to the significant amount of energetic material contained in the MCS, almost any reaction to unplanned stimuli is catastrophic and not something that can be avoided, rather it is stimuli itself. Currently, reaction levels of the LDC to BI, FI and SD are all Type I (full detonations).Also currently, reaction levels for SCO of Type III and Type IV for BI and possibility of something at a higher reaction level than Type V for FI once it has been scored. This is especially significant because in two of the three-system configuration, multiple MCS systems are used together (LAV and ABV). It is very important that the USMC do whatever possible to improve the level of IM compliance for this system.

10.2 OPERATIONAL BENEFITS AND/OR LIMITATIONS

In two of the three operational configurations, multiple MCS systems are directly attached to vehicles, with the potential that Marines will be in the immediate vicinity. In the third configuration, it is attached to the vehicle by a trailer. Thus, the effects of severe reactions to unplanned stimuli can be devastating. Potential improvements, possible at this time, will be limited in their effect on logistics (changing hazard classification), but the potential effect on level of residual risk could be significant.

10.3 LOGISTICAL BENEFITS AND/OR LIMITATIONS

Potential IM improvements technologically available at this time will have little effect of the logistical burden associated with the transportation and storage of the MCS.

10.4 COST BENEFIT AND/OR PENALTIES

With future application of the MCS with the ABV, which is a single platform that will provide deliberate and in-stride breaching capability and the planned improvements to the level of IM compliance of the MCS will have a significant effect on the amount of damage, both to equipment and personnel that occurs should the system ever react to unplanned stimuli. The cost savings associated with this collateral damage will be substantial.

THE UNDER SECRETARY OF DEFENSE
3010 DEFENSE PENTAGON
WASHINGTON, D.C. 20301-3010

ACQUISITION AND
TECHNOLOGY

26 JAN 1999

MEMORANDUM FOR SECRETARIES OF THE MILITARY DEPARTMENTS
ATTN: ACQUISITION EXECUTIVES
SOCOM ACQUISITION EXECUTIVE
JOINT STAFF (J-4)
CHAIRMAN, DOD EXPLOSIVES SAFETY BOARD

SUBJECT: Exemption for Existing Inventory Items to Insensitive Munitions (IM) Requirements

The Services' existing munitions inventories represent a significant investment. It is not economically possible to backfit IM improvements into these weapons, even where mature technology exists to achieve major survivability gains. In recognition of this situation and to document our policy, munitions items currently in Service inventory are exempt from meeting Department of Defense IM requirements.

This exemption applies, in perpetuity, to all munitions in the current inventory, and to all munitions currently in production, including munitions currently under production contracts, in Low Rate Initial Production, and those munitions awaiting acceptance or delivery. The above notwithstanding, the Services should look for every feasible window of opportunity to insert IM technology into weapons continuing in production. Such improvements in existing munitions will aid in achieving the Department's long-term goal of having an IM-compliant inventory. The aforementioned exemption is not transferable to new or modified munitions that use components, groups, sections, or subsystems from exempted munitions. "New munitions" include those that are under development contracts or are new, planned acquisition programs.

In the event of a planned change in an exempted munition's life cycle (for example, a change in the munition's deployment environment or a munition's life extension program), a Service should review the planned change to determine whether the exemption still applies or if a need exists to incorporate insensitive munitions modifications, or to impose restrictions on the munition's use.

This policy is effective as of the date of this memorandum.

J. S. Gansler

Department of Defense
INSTRUCTION

NUMBER 5000.2
May 12, 2003

USD(AT&L)

SUBJECT: Operation of the Defense Acquisition System

References:
(a) DoD Instruction 5000.2, "Operation of the Defense Acquisition System," April 5, 2003 (hereby canceled)
(b) DoD 5000.2-R, "Mandatory Procedures for Major Defense Acquisition Programs (MDAPs) and Major Automated Information System (MAIS) Acquisition Programs," April 5, 2002 (hereby canceled)
(c) DoD Directive 5000.1, "The Defense Acquisition System," May 12, 2003
(d) through (bl), see enclosure 1

1. PURPOSE

This Instruction:

1.1. Reissues reference (a) and cancels reference (b).

1.2. Implements reference (c), the guidelines of references (d) and (e), and current laws.

1.3. Establishes a simplified and flexible management framework for translating mission needs and technology opportunities, based on approved mission needs and requirements, into stable, affordable, and well-managed acquisition programs that include weapon systems and automated information systems (AISs).

1.4. Consistent with statutory requirements and reference (c), authorizes Milestone Decision Authorities (MDAs) to tailor procedures to achieve cost, schedule, and performance goals.

2. APPLICABILITY AND SCOPE

This Instruction applies to:

2.1. The Office of the Secretary of Defense, the Military Departments, the Chairman of the Joint Chiefs of Staff (Joint Staff), the Combatant Commands, the Office of the Inspector General of the Department of Defense, the Defense Agencies, DoD Field Activities, and all other organizational entities within the Department of Defense (hereafter referred to collectively as "the DoD Components").

2.2. All defense technology projects and acquisition programs. Some requirements, where stated, apply only to Major Defense Acquisition Programs (MDAPs) and Major Automated Information System (MAIS) programs.

2.3. In general, highly sensitive classified, cryptologic, and intelligence projects and programs shall follow the guidance in this Instruction and reference (c) for technology projects and acquisition programs of equivalent acquisition category (ACAT).

Figure 1. The Defense Acquisition Management Framework.

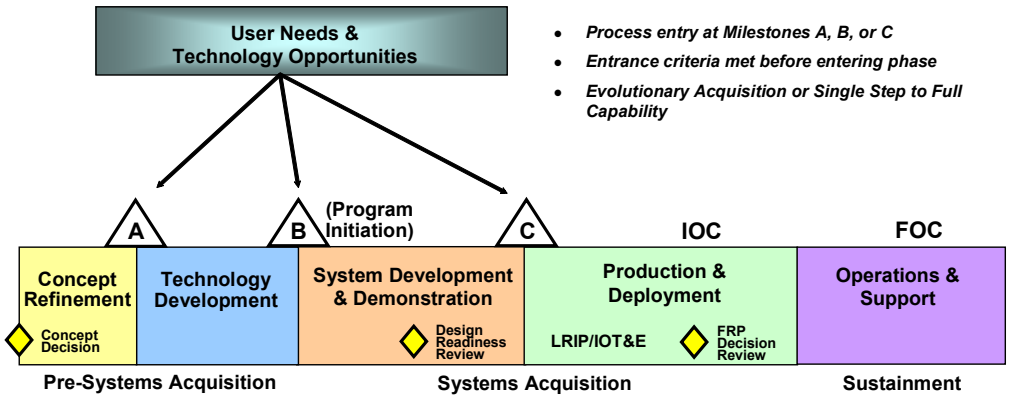

3. PROCEDURES

3.1. Defense Acquisition Management Framework. Figure 1 depicts the Defense Acquisition Management Framework.

3.1.1. Consistent with reference (c), the program manager (PM) and the MDA shall exercise discretion and prudent business judgment to structure a tailored, responsive, and innovative program.

3.1.2. The MDA may authorize entry into the acquisition system at any point, consistent with phase-specific entrance criteria and statutory requirements. Progress through the acquisition life cycle depends on obtaining sufficient knowledge to continue to the next stage of development.

3.1.3. The tables at enclosure 3 identify the statutory and regulatory information requirements of each milestone and decision point. Additional non-mandatory guidance on best practices, lessons learned, and expectations is available in a guidebook at http://dod5000.dau.mil/.

3.2. Requirements and Acquisition Integration

3.2.1. Integrated Architectures

3.2.1.1. The Under Secretary of Defense (Acquisition, Technology, and Logistics) (USD(AT&L)), the Assistant Secretary of Defense for Command, Control, Communications, and Intelligence (ASD(C3I)), the Joint Staff, the Military Departments, the Defense Agencies, Combatant Commanders, and other appropriate DoD Components shall work collaboratively to develop joint integrated architectures for capability areas as agreed to by the Joint Staff. In addition, the Under Secretary of Defense (Comptroller) (USD(C)) is responsible for the development of the Financial Management Enterprise Architecture.

3.2.1.2. Each integrated architecture shall have three views: operational, systems, and technical, as defined in the current Architectural Framework guidance and have direct relationships to DoD Component-developed functional area integrated architectures. The Joint Staff (or Principal Staff Assistant (PSA) for business areas) shall lead development of the operational view, in collaboration with the Services, Agencies, and Combatant Commanders, to describe the joint capabilities that the user seeks and how to employ them. The USD(AT&L) (or PSA for business areas) shall lead development of the systems view, in collaboration with the Services, Agencies, and Combatant Commanders, to characterize available technology and

systems functionality. The systems view shall identify the kinds of systems and integration needed to achieve the desired operational capability. The DoD Chief Information Officer (CIO) shall lead the development and facilitate the implementation of the Global Information Grid Integrated Architecture, which shall underpin all mission area and capability architectures. The Military Departments and Defense Agencies shall participate in the identification of the appropriate technical view consisting of standards that define and clarify the individual systems technology and integration requirements. The standards used to form the Technical Views of integrated architectures shall be selected from those contained in the current approved version of the Joint Technical Architecture, accessible at http://jta.disa.mil/, reference (f).

3.2.2. Integrated Capability Assessments, Capability Roadmaps, and Investment Strategies. Using the integrated architectures, the USD(AT&L) shall lead the development of integrated plans or roadmaps. The Department of Defense shall use these roadmaps to conduct capability assessments, guide systems development, and define the associated investment plans as the basis for aligning resources and as an input to the Defense Planning Guidance, Program Objective Memorandum development, and Program and Budget Reviews.

Figure 2. Requirements and Acquisition Process Depiction.

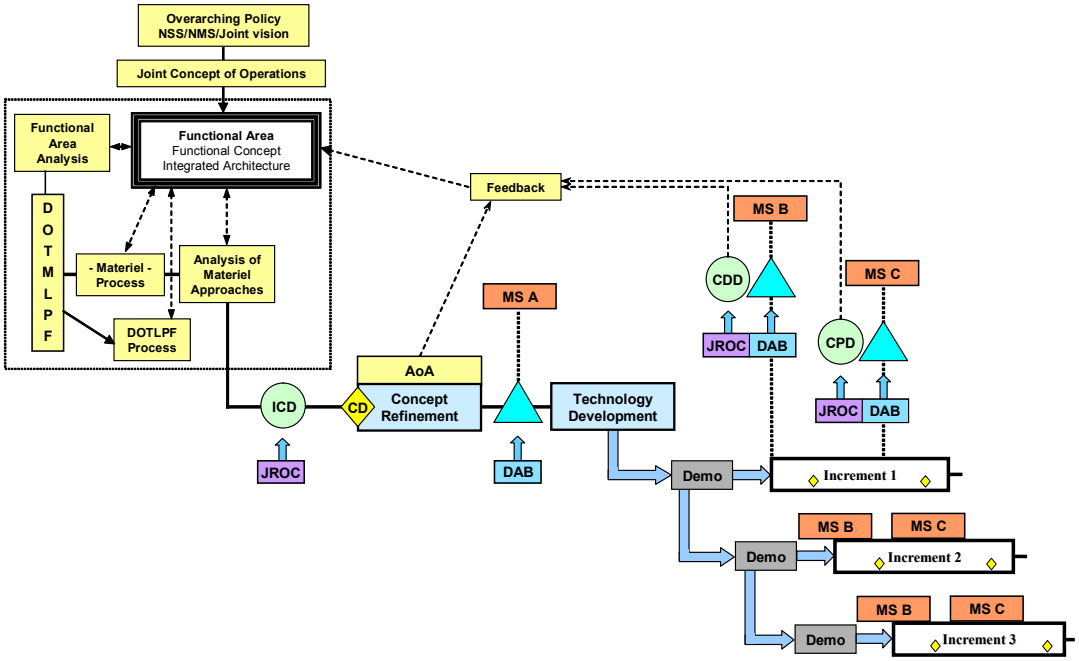

3.3. Evolutionary Acquisition

3.3.1. Evolutionary acquisition is the preferred DoD strategy for rapid acquisition of mature technology for the user. An evolutionary approach delivers capability in increments, recognizing, up front, the need for future capability improvements. The objective is to balance needs and available capability with resources, and to put capability into the hands of the user quickly. The success of the strategy depends on consistent and continuous definition of requirements, and the maturation of technologies that lead to disciplined development and production of systems that provide increasing capability towards a materiel concept. (See Figure 2.)

3.3.2. The approaches to achieve evolutionary acquisition require collaboration between the user, tester, and developer. They include:

3.3.2.1. Spiral Development. In this process, a desired capability is identified, but the end-state requirements are not known at program initiation. Those requirements are refined through demonstration and risk management; there is continuous user feedback; and each increment provides the user the best possible capability. The requirements for future increments depend on feedback from users and technology maturation.

3.3.2.2. Incremental Development. In this process, a desired capability is identified, an end-state requirement is known, and that requirement is met over time by developing several increments, each dependent on available mature technology.

3.4. User Needs and Technology Opportunities

3.4.1. The capability needs and acquisition management systems shall use Joint Concepts, integrated architectures, and an analysis of doctrine, organization, training, materiel, leadership, personnel, and facilities (DOTMLPF) in an integrated, collaborative process to define desired capabilities to guide the development of affordable systems. The Chairman of the Joint Chiefs of Staff, with the assistance of the Joint Requirements Oversight Council, shall assess and provide advice regarding military capability needs for defense acquisition programs. The process through which the Chairman provides his advice is described in Chairman of the Joint Chiefs of Staff Instruction 3170.01(reference (g)). Representatives from multiple DoD communities shall assist in formulating broad, time-phased, operational goals, and describing requisite capabilities in the Initial Capabilities Document (ICD). They shall examine multiple concepts and materiel approaches to optimize the way the Department of Defense provides these capabilities. The examination shall include robust analyses that consider affordability, technology maturity, and responsiveness.

3.4.2. Technologists and industry shall identify and protect promising technologies in laboratories and research centers, academia, and foreign and domestic commercial sources; reduce the risks of introducing these technologies into the acquisition process; and promote coordination, cooperation, and mutual understanding of technology issues. The conduct of Science & Technology (S&T) activities shall not preclude, and where practicable, shall facilitate future competition.

3.5. Concept Refinement

3.5.1. Purpose. The purpose of this phase is to refine the initial concept and develop a Technology Development Strategy (TDS). Entrance into this phase depends upon an approved ICD resulting from the analysis of potential concepts across the DoD Components, international systems from Allies, and cooperative opportunities; and an approved plan for conducting an analysis of alternatives (AoA) for the selected concept, documented in the approved ICD.

3.5.2. Concept Refinement begins with the Concept Decision. The MDA designates the lead DoD Component(s) to refine the initial concept selected, approves the AoA plan, and establishes a date for a Milestone A review. The MDA decisions shall be documented in an Acquisition Decision Memorandum (ADM). This effort shall normally be funded only for the concept refinement work. The MDA decision to begin Concept Refinement DOES NOT mean that a new acquisition program has been initiated. The tables in enclosure 3 identify all statutory and regulatory requirements for the Concept Refinement decision.

3.5.3. The ICD and the AoA plan shall guide Concept Refinement. The focus of the AoA is to refine the selected concept documented in the approved ICD. The AoA shall assess

the critical technologies associated with these concepts, including technology maturity, technical risk, and, if necessary, technology maturation and demonstration needs. To achieve the best possible system solution, emphasis shall be placed on innovation and competition. Existing commercial-off-the-shelf (COTS) functionality and solutions drawn from a diversified range of large and small businesses shall be considered.

3.5.4. The results of the AoA shall provide the basis for the TDS, to be approved by the MDA at Milestone A for potential ACAT I and IA programs. The TDS shall document the following:

3.5.4.1. The rationale for adopting an evolutionary strategy (for most programs) or a single-step-to-full-capability strategy (e.g., for common supply items or COTS items). For an evolutionary acquisition, either spiral or incremental, the TDS shall include a preliminary description of how the program will be divided into technology spirals and development increments, an appropriate limitation on the number of prototype units that may be produced and deployed during technology development, how these units will be supported, and specific performance goals and exit criteria that must be met before exceeding the number of prototypes that may be produced under the research and development program.

3.5.4.2. A program strategy, including overall cost, schedule, and performance goals for the total research and development program.

3.5.4.3. Specific cost, schedule, and performance goals, including exit criteria, for the first technology spiral demonstration.

3.5.4.4. A test plan to ensure that the goals and exit criteria for the first technology spiral demonstration are met.

3.5.5. Concept Refinement ends when the MDA approves the preferred solution resulting from the AoA and approves the associated TDS.

3.6. Technology Development

3.6.1. Purpose. The purpose of this phase is to reduce technology risk and to determine the appropriate set of technologies to be integrated into a full system. Technology Development is a continuous technology discovery and development process reflecting close collaboration between the S&T community, the user, and the system developer. It is an iterative process designed to assess the viability of technologies while simultaneously refining user requirements.

3.6.2. The project shall enter Technology Development at Milestone A when the MDA has approved the TDS. The tables in enclosure 3 identify all statutory and regulatory requirements applicable to Milestone A. This effort normally shall be funded only for the advanced development work. For business area capabilities, commercially available solutions shall be employed. (A toolkit of best practices is available at http://deskbook.dau.mil). A favorable Milestone A decision DOES NOT mean that a new acquisition program has been initiated.

3.6.3. Shipbuilding programs may be initiated at the beginning of Technology Development. The information required in the tables at enclosure 3 shall support program initiation. A cost assessment shall be prepared in lieu of an independent cost estimate (ICE), and a preliminary assessment of the maturity of key technologies shall be provided.

3.6.4. Before requesting a Milestone A decision for an AIS program, DoD Components shall affirmatively answer the following questions:

3.6.4.1. Does the acquisition support core/priority mission functions that need to be performed by the Federal Government?

3.6.4.2. Does the acquisition need to be undertaken by the DoD Component because no alternative private sector or governmental source can better support the function?

3.6.4.3. Does the acquisition support work processes that have been simplified or otherwise redesigned to reduce costs, improve effectiveness, and make maximum use of commercial off-the-shelf technology?

3.6.5. The ICD and the TDS shall guide this effort. Multiple technology development demonstrations may be necessary before the user and developer agree that a proposed technology solution is affordable, militarily useful, and based on mature technology. The TDS shall be reviewed and updated upon completion of each technology spiral and development increment. Updates shall be approved to support follow-on increments.

3.6.6. If an evolutionary strategy is used, the initial capability represents only partial fulfillment of the overall capability described in the ICD, and successive technology development efforts continue until all capabilities have been satisfied. In an evolutionary acquisition, the identification and development of the technologies necessary for follow-on increments continues in parallel with the acquisition of preceding increments, allowing the mature technologies to more rapidly proceed into System Development and Demonstration (SDD). Each increment of an evolutionary acquisition program shall have an associated MDA-approved TDS.

3.6.7. The project shall exit Technology Development when an affordable increment of militarily-useful capability has been identified, the technology for that increment has been demonstrated in a relevant environment, and a system can be developed for production within a short timeframe (normally less than five years); or when the MDA decides to terminate the effort. During Technology Development, the user shall prepare the Capability Development Document (CDD) to support program initiation, refine the integrated architecture, and clarify how the program will lead to joint warfighting capability. The CDD builds on the ICD and provides the detailed operational performance parameters necessary to design the proposed system. A Milestone B decision follows the completion of Technology Development.

3.7. System Development and Demonstration

3.7.1. Purpose

3.7.1.1. The purpose of the SDD phase is to develop a system or an increment of capability; reduce integration and manufacturing risk (technology risk reduction occurs during Technology Development); ensure operational supportability with particular attention to reducing the logistics footprint; implement human systems integration (HSI); design for producibility; ensure affordability and the protection of critical program information (CPI) by implementing appropriate techniques such as anti-tamper; and demonstrate system integration, interoperability, safety, and utility. Development and demonstration are aided by the use of simulation-based acquisition and test and evaluation integrated into an efficient continuum and guided by a system acquisition strategy and test and evaluation master plan (TEMP). The independent planning of dedicated Initial Operational Test and Evaluation (IOT&E), as required

by law, and Follow-on Operational Test and Evaluation (FOT&E), if required, shall be the responsibility of the appropriate operational test agency (OTA). A Director, Operational Test & Evaluation (DOT&E)-approved live-fire test and evaluation (LFT&E) strategy shall guide LFT&E activity.

3.7.1.2. SDD has two major efforts: System Integration and System Demonstration. The entrance point is Milestone B, which is also the initiation of an acquisition program. There shall be only one Milestone B per program or evolutionary increment. Each increment of an evolutionary acquisition shall have its own Milestone B. The tables in enclosure 3 identify the statutory and regulatory requirements that shall be met at Milestone B. For Shipbuilding Programs, the required program information shall be updated in support of the Milestone B decision, and the ICE shall be completed. The lead ship in a class shall normally be authorized at Milestone B. Technology readiness assessments shall consider the risk associated with critical subsystems prior to ship installation. Long lead for follow ships may be initially authorized at Milestone B, with final authorization and follow ship approval by the MDA dependent on completion of critical subsystem demonstration and an updated assessment of technology maturity.

3.7.2. Entrance Criteria. Entrance into this phase depends on technology maturity (including software), approved requirements, and funding. Unless some other factor is overriding in its impact, the maturity of the technology shall determine the path to be followed. Programs that enter the acquisition process at Milestone B shall have an ICD that provides the context in which the capability was determined and approved, and a CDD that describes specific program requirements.

3.7.2.1. Before proposing a new acquisition program, the DoD Components shall affirmatively answer the questions at paragraphs 3.6.4.1. through 3.6.4.3.

3.7.2.2. The management and mitigation of technology risk, which allows less costly and less time-consuming systems development, is a crucial part of overall program management and is especially relevant to meeting cost and schedule goals. Objective assessment of technology maturity and risk shall be a routine aspect of DoD acquisition. Technology developed in S&T or procured from industry or other sources shall have been demonstrated in a relevant environment or, preferably, in an operational environment to be considered mature enough to use for product development in systems integration. Technology readiness assessments, and where necessary, independent assessments, shall be conducted. If technology is not mature, the DoD Component shall use alternative technology that is mature and that can meet the user's needs.

3.7.2.3. Prior to beginning SDD, users shall identify and the requirements authority shall approve a minimum set of key performance parameters (KPPs), included in the CDD, that shall guide the efforts of this phase. These KPPs may be refined, with the approval of the requirements authority, as conditions warrant. Each set of KPPs shall only apply to the current increment of capability in development and demonstration (or to the entire system in a single step to full capability). At Milestone B, the PM shall prepare and the MDA shall approve an acquisition strategy to guide activity during SDD. The acquisition strategy shall include a TDS for the next technology spiral(s) (see paragraph 3.3.2.1, above).

3.7.2.4. In an evolutionary acquisition program, the development of each increment shall begin with a Milestone B, and production resulting from that increment shall

begin with a Milestone C. The requirements of the tables at enclosure 3 shall apply to each increment based on the ACAT level of the entire planned program.

3.7.2.5. Each program or increment shall also have an Acquisition Program Baseline establishing program goals—thresholds and objectives—for the minimum number of cost, schedule, and performance parameters that describe the program over its life cycle.

3.7.2.6. An affordability determination results from the process of addressing cost during the requirements process and is included in each CDD using life-cycle cost or, if available, total ownership cost. Transition into SDD also requires full funding (i.e., inclusion of the dollars and manpower needed for all current and future efforts to carry out the acquisition strategy in the budget and out-year program), which shall be programmed when a system concept and design have been selected, a PM has been assigned, requirements have been approved, and system-level development is ready to begin. In the case of a replacement system, when the Milestone B is projected to occur in the first 2 years of the Future Years Defense Program under review, the program shall be fully funded in that Planning, Programming, and Budgeting System cycle. In no case shall full funding be done later than Milestone B, unless a program first enters the acquisition process at Milestone C. The DoD Components shall fully fund their share of approved joint and international cooperative program commitments.

3.7.3. System Integration. This effort is intended to integrate subsystems, complete detailed design, and reduce system-level risk. The program shall enter System Integration when the PM has a technical solution for the system, but has not yet integrated the subsystems into a complete system. The CDD shall guide this effort. This effort shall typically include the demonstration of prototype articles or engineering development models (EDMs).

3.7.4. Proceeding beyond the Design Readiness Review. The Design Readiness Review during SDD provides an opportunity for mid-phase assessment of design maturity as evidenced by measures such as the number of subsystem and system design reviews successfully completed; the percentage of drawings completed; planned corrective actions to hardware/software deficiencies; adequate development testing; an assessment of environment, safety and occupational health risks; a completed failure modes and effects analysis; the identification of key system characteristics and critical manufacturing processes; an estimate of system reliability based on demonstrated reliability rates; etc. Successful completion of the Design Readiness Review ends System Integration and continues the SDD phase into the System Demonstration effort. MDAs may, consistent with the intent of this paragraph, determine the form and content of the review.

3.7.5. System Demonstration. This effort is intended to demonstrate the ability of the system to operate in a useful way consistent with the approved KPPs. The program shall enter System Demonstration when the PM has demonstrated the system in prototypes or EDMs. This effort shall end when a system is demonstrated in its intended environment, using the selected prototype; meets approved requirements; industrial capabilities are reasonably available; and the system meets or exceeds exit criteria and Milestone C entrance requirements. Successful development test and evaluation to assess technical progress against critical technical parameters, early operational assessments, and, where proven capabilities exist, the use of modeling and simulation to demonstrate system integration are critical during this effort. The completion of this phase is dependent on a decision by the MDA to commit to the program at Milestone C or a decision to end this effort.

3.7.6. The Department of Defense may not conduct operational testing (i.e., operational assessment (OA), IOT&E, or FOT&E) until the DOT&E approves, in writing, the OT&E portions of the combined developmental and operational test plan for programs on the OSD T&E Oversight List, and the adequacy of the plans (including the projected level of funding) for the OT&E to be conducted in connection with that program (reference (h)). Deficiencies encountered in testing prior to Milestone C shall be resolved prior to proceeding beyond Low-Rate Initial Production (LRIP) (at the Full-Rate Production Decision Review) and any fixes verified in FOT&E.

3.8. Production and Deployment

3.8.1. Purpose

3.8.1.1. The purpose of the Production and Deployment phase is to achieve an operational capability that satisfies mission needs. Operational test and evaluation shall determine the effectiveness and suitability of the system. The MDA shall make the decision to commit the Department of Defense to production at Milestone C. Milestone C authorizes entry into LRIP (for MDAPs and major systems), into production or procurement (for non-major systems that do not require LRIP) or into limited deployment in support of operational testing for MAIS programs or software-intensive systems with no production components. The tables at enclosure 3 identify the statutory and regulatory requirements that shall be met at Milestone C.

3.8.1.2. For MDAPs and other DOT&E Oversight programs, Production and Deployment has two major efforts, LRIP and Full-Rate Production and Deployment, and includes a Full-Rate Production Decision Review.

3.8.2. Entrance Criteria. Entrance into this phase depends on the following criteria: acceptable performance in development, test and evaluation and operational assessment; mature software capability; no significant manufacturing risks; manufacturing processes under control (if Milestone C is full-rate production); an approved ICD (if Milestone C is program initiation); an approved Capability Production Document (CPD); acceptable interoperability; acceptable operational supportability; compliance with the DoD Strategic Plan; and demonstration that the system is affordable throughout the life cycle, optimally funded, and properly phased for rapid acquisition. The CPD reflects the operational requirements resulting from SDD and details the performance expected of the production system. If Milestone C approves LRIP, a subsequent review and decision shall authorize full-rate production.

3.8.3. LRIP

3.8.3.1. This effort is intended to result in completion of manufacturing development in order to ensure adequate and efficient manufacturing capability and to produce the minimum quantity necessary to provide production or production-representative articles for IOT&E, establish an initial production base for the system; and permit an orderly increase in the production rate for the system, sufficient to lead to full-rate production upon successful completion of operational (and live-fire, where applicable) testing.

3.8.3.2. LRIP quantities shall be minimized. The MDA shall determine the LRIP quantity for MDAPs and major systems at Milestone B. The LRIP quantity for an MDAP (with rationale for quantities exceeding 10 percent of the total production quantity documented in the acquisition strategy) shall be included in the first Selected Acquisition Report after its determination. Any increase in quantity after the initial determination shall be approved by the

MDA. The LRIP quantity shall not be less than one unit. When approved LRIP quantities are expected to be exceeded because the program has not yet demonstrated readiness to proceed to full-rate production, the MDA shall assess the cost and benefits of a break in production versus continuing annual buys.

3.8.3.3. DOT&E shall determine the number of production or production-representative test articles required for LFT&E and IOT&E of DOT&E Oversight Programs (MDAPs as defined in paragraph a(2)(B) of 10 U.S.C. 139) (reference (i)). For a system that is not a DOT&E Oversight Program, the OTA shall determine the number of test articles required for IOT&E. Modifications to an existing system with an established production base may not require low-rate production to provide production or production-representative articles for operational testing; test articles, if needed, may come from the existing production line.

3.8.3.4. LRIP is not applicable to AISs or software-intensive systems with no developmental hardware; however, a limited deployment phase may be applicable. Software shall have demonstrated the maturity level required in the CPD prior to deploying it to the operational environment. Once the maturity level has been demonstrated, the system or increment is baselined, and a methodical and synchronized deployment plan is implemented for all applicable locations.

3.8.3.5. LRIP for ships and satellites is production of items at the minimum quantity and rate that is feasible and that preserves the mobilization production base for that system.

3.8.4. Full-Rate Production Criteria. An MDAP may not proceed beyond LRIP without approval of the MDA. The available knowledge to support this approval shall include demonstrated control of the manufacturing process and acceptable reliability, the collection of statistical process control data, and the demonstrated control and capability of other critical processes. The decision to continue beyond low-rate to full-rate production, or beyond limited deployment of AISs or software-intensive systems with no developmental hardware, shall require completion of IOT&E, submission of the Beyond LRIP Report for DOT&E Oversight Programs, and submission of the LFT&E Report (where applicable) to Congress, to the Secretary of Defense, and to the USD(AT&L).

3.8.5. Full-Rate Production and Deployment. Continuation into full-rate production results from a successful Full-Rate Production Decision Review by the MDA (or person designated by the MDA). This effort delivers the fully funded quantity of systems and supporting materiel and services for the program or increment to the users. During this effort, units shall attain Initial Operational Capability. The tables at enclosure 3 identify the statutory and regulatory requirements associated with this decision.

3.9. Operations and Support

3.9.1. Purpose. The objective of this activity is the execution of a support program that meets operational support performance requirements and sustains the system in the most cost-effective manner over its total life cycle. When the system has reached the end of its useful life, it shall be disposed of in an appropriate manner. Operations and Support has two major efforts: Sustainment and Disposal.

3.9.2. Sustainment

3.9.2.1. Sustainment includes supply, maintenance, transportation, sustaining engineering, data management, configuration management, manpower, personnel, training,

habitability, survivability, environment, safety (including explosives safety), occupational health, protection of critical program information, anti-tamper provisions, and information technology (IT), including National Security Systems (NSS), supportability and interoperability functions.

3.9.2.2. Effective sustainment of weapon systems begins with the design and development of reliable and maintainable systems through the continuous application of a robust systems engineering methodology. As a part of this process, the PM shall employ human factors engineering to design systems that require minimal manpower; provide effective training; can be operated and maintained by users; and are suitable (habitable and safe with minimal environmental and occupational health hazards) and survivable (for both the crew and equipment).

3.9.2.3. The PM shall work with the users to document performance and support requirements in performance agreements specifying objective outcomes, measures, resource commitments, and stakeholder responsibilities. The Military Services shall document sustainment procedures that ensure integrated combat support.

3.9.2.4. The DoD Components shall initiate system modifications, as necessary, to improve performance and reduce ownership costs.

3.9.2.4.1. PMs shall optimize operational readiness through affordable, integrated, embedded diagnostics and prognostics, and embedded training and testing; serialized item management; automatic identification technology (AIT); and iterative technology refreshment.

3.9.2.4.2. PMs shall ensure that data syntax and semantics for high capacity AIT devices conform to International Organization for Standardization (ISO) 15434 and ISO 15418, references (j) and (k).

3.9.2.5. The Services, in conjunction with users, shall conduct continuing reviews of sustainment strategies, utilizing comparisons of performance expectation as defined in performance agreements against actual performance measures. PMs shall revise, correct, and improve sustainment strategies as necessary to meet performance requirements.

3.9.2.6. Sustainment strategies shall evolve and be refined throughout the life cycle, particularly during development of subsequent increments of an evolutionary strategy, modifications, upgrades, and reprocurement. The PM shall ensure that a flexible, performance-oriented strategy to sustain systems is developed and executed.

3.9.3. Disposal. At the end of its useful life, a system shall be demilitarized and disposed in accordance with all legal and regulatory requirements and policy relating to safety (including explosives safety), security, and the environment. During the design process, PMs shall document hazardous materials contained in the system, and shall estimate and plan for the system's demilitarization and safe disposal.

3.10. Review Procedures

3.10.1. Review of ACAT ID and IAM Programs. The USD(AT&L) shall designate programs as ACAT ID, and the ASD(C3I) shall designate programs as ACAT IAM, when the program has special interest based on one or more of the following factors: technological complexity; Congressional interest; a large commitment of resources; the program is critical to achievement of a capability or set of capabilities; or the program is a joint program. Exhibiting

one or more of these characteristics, however, shall not automatically lead to an ACAT ID or IAM designation.

3.10.2. Defense Acquisition Board (DAB) Review. The DAB shall advise the USD(AT&L) on critical acquisition decisions. The USD(AT&L) shall chair the DAB, and the Vice Chairman of the Joint Chiefs of Staff shall serve as the co-chair. An ADM shall document the decision(s) resulting from the review.

3.10.3. IT Acquisition Board (ITAB) Review. The ITAB shall advise the ASD(C3I)/DoD CIO on critical acquisition decisions. These reviews shall enable the execution of the DoD CIO's acquisition-related responsibilities for IT, including NSS, under the Clinger-Cohen Act (CCA), reference (l), and Title 10 of United States Code, reference (m). An ADM shall document the decision(s) resulting from the review.

3.10.4. Overarching Integrated Product Team (OIPT). An OIPT shall facilitate program communications and issue resolution, and support the MDA, for ACAT I and IA programs.

4. RESPONSIBILITIES

MDAs shall establish mandatory procedures for assigned programs. These procedures shall not exceed the requirements for MDAPs and MAIS acquisition programs established in this Instruction or in reference (c). The Heads of the DoD Components shall keep the issuance of any directives, instructions, policy memorandums, or regulations necessary to implement the mandatory procedures contained in this Instruction and reference (c) to a minimum. Waivers or requests for exceptions to the provisions of this Instruction shall be submitted to the USD(AT&L), ASD(C3I), or DOT&E, as appropriate via the Component Acquisition Executive (CAE). Statutory requirements cannot be waived unless the statute specifically provides for waiver of the stated requirements.

5. EFFECTIVE DATE

This Instruction is effective immediately.

Under Secretary of Defense (Acquisition, Technology, and Logistics)	Assistant Secretary of Defense (Command, Control, Communications, and Intelligence)	Director, Operational Test and Evaluation

Enclosures – 9

E1. References, continued
E2. ACAT and MDA
E3. Statutory and Regulatory Information and Milestone Requirements
E4. IT Considerations
E5. Integrated Test and Evaluation
E6. Resource Estimation
E7. Human Systems Integration
E8. Acquisition of Services
E9. Program Management

E1. ENCLOSURE 1

REFERENCES, continued

(d) OMB Circular A-11, "Preparing, Submitting, and Executing the Budget," June 27, 2002
(e) OMB Circular A-109, "Major Systems Acquisitions," April 1976
(f) Department of Defense Joint Technical Architecture, current version
(g) Chairman of the Joint Chiefs of Staff Instruction 3170.01 Series, "Requirements Generation System," April 15, 2001
(h) Section 2399 of title 10, United States Code, "Operational Test and Evaluation of Defense Acquisition Programs"
(i) Section 139 of title 10, United States Code, "Director of Operational Test and Evaluation"
(j) ISO 15418-1999- "EAN/UCC Application Identifiers and Fact Data Identifiers and Maintenance"
(k) ISO 15434-1999 – "Transfer Syntax for High Capacity ADC Media"
(l) Subtitle III of title 40, United States Code [formerly the Clinger-Cohen Act of 1996 which was repealed and many of its provisions reenacted at 40 U.S.C. 11101 et seq.]
(m) Title 10, United States Code, "Armed Forces"
(n) Section 2430 of title 10, United States Code, "Major Defense Acquisition Program Defined"
(o) Section 2302d of title 10, United States Code, "Major system: definitional threshold amounts"
(p) Section 2302 of title 10, United States Code, "Definitions"
(q) Section 2364 of title 10, United States Code, "Coordination and Communication of Defense Research Activities"
(r) Section 2377 of title 10, United States Code, "Preference for Acquisition of Commercial Items"
(s) Section 644 of title 15, United States Code, "Procurement strategies; contract bundling"
(t) Section 8088, Public Law 107-248, "Department of Defense Appropriation Act for Fiscal Year 2003" (or successor provision)
(u) Section 306 of title 5, United States Code, "Strategic Plans" (part of the Government Performance and Results Act)
(v) Section 11313 of title 40, United States Code, untitled
(w) Section 811 of the "Floyd D. Spence National Defense Authorization Act for Fiscal Year 2001," Public Law 106-398 Appendix
(x) Section 4321 et seq. of title 42, United States Code, "National Environmental Policy Act"
(y) Section 305 of title 47, United States Code, "Government-Owned Stations"
(z) Section 104 of the National Telecommunications and Information Organization Act (Pub. L. 102-538), "Spectrum Management Activities"
(aa) Sections 901, 902, 903, and 904 of title 47, United States Code
(ab) DoD Directive 4650.1, "Management and Use of the Radio Frequency Spectrum," June 24, 1987
(ac) Section 2432 of title 10, United States Code, "Selected Acquisition Reports"
(ad) Section 2433 of title 10, United States Code, "Unit Cost Reports"
(ae) Section 2366 of title 10, United States Code, "Major Systems and Munitions Programs: Survivability and Lethality Testing Required Before Full-Scale Production"
(af) Section 2440 of title 10, United States Code, "Technology and Industrial Base Plans"

(ag) Section 2400 of title 10, United States Code, "Low-Rate Initial Production of New Systems"
(ah) Section 2434 of title 10, United States Code, "Independent Cost Estimates; Operational Manpower Requirements"
(ai) Section 220, Public Law 103-160, as amended by Sec. 214 of Pub.L. 103-337
(aj) Section 2460 of title 10, United States Code, "Definition of Depot-Level Maintenance and Repair"
(ak) Section 2464 of title 10, United States Code, "Core Logistics Capabilities"
(al) Section 2466 of title 10, United States Code, "Limitations on the Performance of Depot-Level Maintenance of Material"
(am) Section 2469 of title 10, United States Code, "Contracts to Perform Workloads Previously Performed by Depot-Level Activities of the Department of Defense: Requirement of Competition"
(an) Section 803, Public Law 107-314, "Bob Stump National Defense Authorization Act for Fiscal Year 2003," "Spiral development under major defense acquisition programs"
(ao) Section 2435 of title 10, United States Code, "Baseline Description"
(ap) Section 2350a of title 10, United States Code, "Cooperative Research and Development Programs: Allied Countries"
(aq) DoD Directive 5105.21, "Defense Intelligence Agency (DIA)," February 18, 1997
(ar) DoD Instruction 4630.8, "Procedures for Interoperability and Supportability of Information Technology (IT) and National Security Systems (NSS)," May 2, 2002
(as) DoD Directive 4630.5, "Interoperability and Supportability of Information Technology (IT) and National Security Systems (NSS)," January 11, 2002
(at) CJCSI 6212.01B, "Interoperability and Supportability of National Security Systems, and Information Technology Systems," May 8, 2000
(au) DoD Directive 5200.39, "Security, Intelligence, and Counterintelligence Support to Acquisition Program Protection," September 10, 1997
(av) American National Standards Institute (ANSI)/Electronic Industries Alliance (EIA) 748-A-1998 (R2002), August 28, 2002
(aw) DoD 5000.4-M-1, "Contractor Cost Data Reporting (CCDR) Manual," April 1999
(ax) Section 1004, Public Law 107-314, "Bob Stump National Defense Authorization Act for Fiscal Year 2003," "Development and Implementation of Financial Management Enterprise Architecture"
(ay) Section 1451 of title 40, United States Code, "Applicability to National Security Systems"
(az) Executive Order 12114, "Environmental Effects Abroad of Major Federal Actions," January 4, 1979
(ba) Office of the Secretary of Defense Memorandum, "Designation of Programs for 200x OSD Test and Evaluation (T&E) Oversight," current edition
(bb) DoD Directive 5000.4, "Cost Analysis Improvement Group (CAIG)," November 16, 1994
(bc) DoD 5000.4-M, "Cost Analysis Guidance and Procedures," December 11, 1992
(bd) DoD Directive 1430.13, "Training Simulators and Devices," August 22, 1986
(be) Section 801(d) of the National Defense Authorization Act for Fiscal Year 2002, Public Law 107-107
(bf) Sections 1701-1764 of title 10, United States Code, "Management policies" [of the Defense acquisition workforce]
(bg) DoD Directive 5015.2, "DoD Records Management Program," March 6, 2000

(bh) Section 3101 et seq. of title 44, United States Code, "Records Management by Federal Agencies"
(bi) "Interim Defense Acquisition Guidebook," October 30, 2002
(bj) DoD Directive 5530.3, "International Agreements," June 11, 1987
(bk) Section 2341 of title 10, United States Code, "Authority to Acquire Logistic Support, Supplies, and Services for Elements of the Armed Forces Deployed Outside the U.S."
(bl) Section 2342 of title 10, United States Code, "Cross-Servicing Agreements"

E2. ENCLOSURE 2

ACAT AND MDA

E2.1. General. A technology project or acquisition program shall be categorized based on its location in the acquisition process, dollar value, and MDA special interest.

E2.2. Pre-ACAT Technology Projects. Advanced Technology Demonstrations, Joint Warfighting Experiments, Advanced Concept and Technology Demonstrations, Concept Refinement, and Technology Development occur prior to acquisition program initiation. The USD(AT&L) shall be the MDA for those projects that, if successful, will likely result in an MDAP. The ASD(C3I)/DoD CIO shall be the MDA for those projects that, if successful, will result in a MAIS.

E2.3. Table E2.T1. contains the description and decision authority for ACAT I through III programs.

Table E2.T1. Description and Decision Authority for ACAT I – III Programs

Acquisition Category	Reason for ACAT Designation	Decision Authority
ACAT I	• MDAP (10 USC 2430, reference (n))) o Dollar value: estimated by the USD(AT&L) to require an eventual total expenditure for research, development, test and evaluation (RDT&E) of more than $365 million in fiscal year (FY) 2000 constant dollars or, for procurement, of more than $2.190 billion in FY 2000 constant dollars o MDA designation • MDA designation as special interest	ACAT ID: USD(AT&L) ACAT IC: Head of the DoD Component or, if delegated, the DoD Component Acquisition Executive (CAE)
ACAT IA	• MAIS: Dollar value of AIS estimated by the DoD Component Head to require program costs (all appropriations) in any single year in excess of $32 million in fiscal year (FY) 2000 constant dollars, total program costs in excess of $126 million in FY 2000 constant dollars, or total life-cycle costs in excess of $378 million in FY 2000 constant dollars • MDA designation as special interest	ACAT IAM: ASD(C3I)/DoD CIO ACAT IAC: CAE, as delegated by the DoD CIO
ACAT II	• Does not meet criteria for ACAT I • Major system o Dollar value: estimated by the DoD Component Head to require an eventual total expenditure for RDT&E of more than $140 million in FY 2000 constant dollars, or for procurement of more than $660 million in FY 2000 constant dollars (10 USC 2302d, reference (o)) o MDA designation[4] (10 USC 2302(5), reference (p)) • MDA designation as special interest	DoD CAE or the individual designated by the CAE
ACAT III	• Does not meet criteria for ACAT II or above • Less-than a MAIS program	Designated by the DoD CAE at the lowest level appropriate

Notes:
1. In some cases, an ACAT IA program, as defined above, also meets the definition of an MDAP. The USD(AT&L) and the ASD(C3I)/DoD CIO shall decide who will be the MDA for such programs. Regardless of who is the MDA, the statutory requirements that apply to MDAPs shall apply to such programs.
2. An AIS program is an acquisition program that acquires IT, except IT that involves equipment that is an integral part of a weapon or weapons system, or is an acquisition of services program.
3. The ASD(C3I)/DoD CIO shall designate programs as ACAT IAM or ACAT IAC. MAIS programs shall not be designated as ACAT II.
4. As delegated by the Secretary of Defense or Secretary of the Military Department.

E2.4. The DoD Component shall notify the USD(AT&L) or the ASD(C3I)/DoD CIO when cost growth or a change in acquisition strategy results in reclassifying a formerly lower ACAT program as an ACAT I or IA program. ACAT-level changes shall be reported as soon as the DoD Component anticipates that the program is within 10 percent of the next ACAT level. ACAT-level reclassification shall occur upon designation by the USD(AT&L) or the ASD(C3I)/DoD CIO.

E2.4.1. The CAE shall request a reclassification of an ACAT I or IA program to a lower ACAT. The request shall identify the reasons for the reduction in category. The category reduction shall become effective upon approval of the request by the USD(AT&L) or the ASD(C3I)/DoD CIO.

E2.4.2. The USD(AT&L) or the ASD(C3I)/DoD CIO may reclassify an acquisition program as a pre-MDAP/MAIS or as an ACAT ID or IAM at any time.

E3. ENCLOSURE 3

STATUTORY, REGULATORY, AND CONTRACT REPORTING INFORMATION AND MILESTONE REQUIREMENTS

E3.1. Tables E3.T1, E3.T2, and E3.T3, below, show the information requirements for all milestones and phases, both statutory and regulatory, to include contract reporting. MDAs may tailor regulatory program information to fit the particular conditions of an individual program. A non-mandatory guidebook shall support this Instruction to provide best practices, lessons learned, and expectations for the information required by these tables. Issues regarding the intent of the expectations described in the guidebook shall be resolved by the MDA. The AT&L Knowledge Sharing System (formerly Defense Acquisition Deskbook) contains a library of mandatory policy and regulations and discretionary practices and advice. The web address is http://deskbook.dau.mil/.

E3.2. The following Statutory Information Requirements Table is divided into sections to indicate which information requirements are applicable to MDAPs, MAIS programs, or both. MAIS programs that are also MDAPs are subject to both sets of statutory requirements.

Table E3.T1. Statutory Information Requirements

INFORMATION REQUIRED	APPLICABLE STATUTE	WHEN REQUIRED
The following information requirements are statutory for both MDAPs and MAIS acquisition programs		
Consideration of Technology Issues	10 U.S.C. 2364, reference (q)	Milestone (MS) A MS B MS C
Market Research	10 U.S.C. 2377, reference (r) 15 U.S.C. 644(e)(2), reference (s)	Technology Opportunities User Needs MS A MS B
CCA Compliance (All IT–including NSS) (See enclosure 4, Table E4.T1.)	40 U.S.C. Subtitle III, reference (l) Sec. 8088, Pub.L. 107-248, reference (t) (or successor appropriations act provision)	MS A (MAIS only) Program Initiation for Ships MS B MS C (if equivalent to Full-Rate Production DR) Full-Rate Production DR
Post-Deployment Performance Review	5 U.S.C. 306, reference (u) 40 U.S.C. 11313, reference (v)	Full-Rate Production DR
Registration of mission-critical and mission-essential information systems, RCS: DD-C3I(AR)2096	Sec. 8088(a), Pub.L. 107-248, reference (t) (or successor appropriations act provision) Pub.L. 106-398, Section 811, reference (w)	Program Initiation for Ships MS B (if Program Initiation) MS C (if Program Initiation or if equivalent to Full-Rate Production DR) Full-Rate Production DR (After initial registration, shall be updated quarterly)
Benefit Analysis and Determination (applicable to bundled acquisitions) (part of acquisition strategy)	15 U.S.C. 644(e), reference (s)	MS B MS C (if no MS B)
Beyond-LRIP Report (OSD OT&E Oversight programs only)	10 U.S.C. 2399, reference (h)	Full-Rate Production DR

Programmatic Environment Safety and Occupational Health Evaluation (PESHE) (Including National Environmental Policy Act (NEPA) Compliance Schedule)	42 U.S.C. 4321, reference (x)	Program Initiation for Ships MS B MS C Full-Rate Production DR
Spectrum Certification Compliance (DD Form 1494) (applicable to all systems/equipment that require utilization of the electromagnetic spectrum)	47 U.S.C. 305, reference (y) Pub. L. 102-538, 104, reference (z) 47 U.S.C. 901-904, reference (aa) DoD Directive 4650.1, reference (ab) OMB Circular A-11, Part 2, reference (d)	MS B MS C (if no MS B)
The following information requirements are statutory but are not applicable to MAIS acquisition programs		
Selected Acquisition Report (SAR)—Reports Control Symbol (RCS): DD-AT&L(Q&A)823 (MDAPs only)	10 U.S.C. 2432, reference (ac)	Program Initiation for Ships MS B and annually thereafter End of quarter following MS C Full-Rate Production DR Breach
Unit Cost Report (UCR)— RCS: DD-AT&L(Q&R)1591 (MDAPs only)	10 U.S.C. 2433, reference (ad)	Quarterly
Live-Fire Waiver & Alternate LFT&E Plan (N/A for AISs) (Covered Systems only)	10 U.S.C. 2366, reference (ae)	MS B
Industrial Capabilities (part of acquisition strategy) (N/A for AISs)	10 U.S.C. 2440, reference (af)	MS B MS C
LRIP Quantities (N/A for AISs)	10 U.S.C. 2400, reference (ag)	MS B
Independent Cost Estimate (CAIG) and Manpower Estimate (reviewed by OUSD(P&R)) (N/A for AISs) (MDAPs Only)	10 U.S.C. 2434, reference (ah)	Program Initiation for Ships (cost assessment only) MS B MS C Full-Rate Production DR
LFT&E Report, RCS: DD-OT&E(AR)1845 (LFT&E-covered programs only)	10 U.S.C. 2366, reference (ae)	Full-Rate Production DR
Electronic Warfare (EW) T&E RCS: DD-AT&L(A)2137 (EW programs on OSD T&E Oversight List)	Sec. 220 of Pub. L. 103-160 as amended by Sec. 214 of Pub. L. 103-337, reference (ai)	Annually
Core Logistics Analysis/Source of Repair Analysis (part of acquisition strategy)	10 U.S.C. 2460, reference (aj) 10 U.S.C. 2464, reference (ak) 10 U.S.C. 2466, reference (al)	MS B MS C (if no MS B)
Competition Analysis (Depot-level Maintenance $3M rule) (part of acquisition strategy)	10.U.S.C. 2469, reference (am)	MS B MS C (if no MS B)
The following information requirements are statutory for MDAPs and are applicable to MAIS acquisition programs by this Instruction		
Technology Development Strategy (TDS)	Sec. 803, Pub.L. 107-314, reference (an)	MS A MS B MS C
Acquisition Program Baseline (APB)	10 U.S.C. 2435, reference (ao)	Program Initiation for Ships MS B MS C (updated, as necessary) Full-Rate Production DR
Program Deviation Report	10 U.S.C. 2435, reference (ao)	Immediately upon a program deviation
Operational Test Plan (DOT&E Oversight Programs only)	10 U.S.C. 2399, reference (h)	Prior to start of operational test and evaluation
Cooperative Opportunities (part of acquisition strategy)	10 U.S.C. 2350a, reference (ap)	MS B MS C

The following information requirements are statutory for MAIS acquisition programs and are not applicable to MDAPs		
Certification of compliance with the Clinger-Cohen Act	Sec. 8088, Pub.L. 107-248, reference (t) (or successor appropriations act provision)	MS A MS B MS C (if equivalent to Full-Rate Production DR) Full-Rate Production DR
Certification of compliance with the Financial Management Enterprise Architecture (Financial Management MAIS acquisition programs only)	Sec. 8088, Pub.L. 107-248, reference (t) (or successor appropriations act provision)	MS A MS B MS C (if equivalent to Full-Rate Production DR) Full-Rate Production DR

Table E3.T2. Regulatory Information Requirements

INFORMATION REQUIRED	SOURCE	WHEN REQUIRED
AoA Plan	This Instruction	Concept Decision
ICD	CJCSI 3170.01, reference (g)	Concept Decision MS A MS B MS C (if Program Initiation)
CDD	CJCSI 3170.01, reference (g)	Program Initiation for Ships MS B
CPD	CJCSI 3170.01, reference (g)	MS C
Acquisition Strategy	This Instruction	Program Initiation for Ships MS B MS C Full-Rate Production DR
Analysis of Alternatives (AoA)	This Instruction *	For MDAPs - MS A - Program Initiation for Ships - MS B - MS C (updated as necessary) For MAIS - MS A - MS B (or equivalent) - Full-Rate Production DR (or equivalent)
System Threat Assessment (AIS programs use published Capstone Information Operations System Threat Assessment) (validated by DIA for ACAT ID programs)	DoD Directive 5105.21, reference (aq)	Program Initiation for Ships MS B MS C
Technology Readiness Assessment	This Instruction	Program Initiation for Ships (preliminary assessment) MS B MS C
Independent Technology Assessment (ACAT ID only) (if required by DUSD(S&T))	This Instruction	MS B MS C
Command, Control, Communications, Computers, and Intelligence Support Plan (C4ISP) (also summarized in the acquisition strategy)	DoD Instruction 4630.8 and DoD Directive 4630.5, references (ar) and (as)	Program Initiation for Ships MS B MS C
Command, Control, Communications, Computers, and Intelligence (C4I) Supportability Certification	CJCSI 6212.01, reference (at) This Instruction	Full-Rate Production DR

Interoperability Certification	CJCSI 6212.01, reference (at) This Instruction	Full-Rate Production DR
Affordability Assessment	This Instruction	MS B MS C
Economic Analysis (MAIS only)	This Instruction *	MS A (may be combined with AoA) MS B (or equivalent) Full-Rate Production DR (or equivalent)
Component Cost Analysis (mandatory for MAIS; as requested by CAE for MDAP)	This Instruction	For MDAPs - Program Initiation for Ships - MS B - Full-Rate Production DR For MAIS - Any time an Economic Analysis is required—either by statute or by the MDA
Cost Analysis Requirements Description (MDAPs and MAIS Acquisition Programs only) (CARDs shall be prepared according to the procedures specified in enclosure 6 of this Instruction)	This Instruction	For MDAPs - Program Initiation for Ships - MS B - MS C - Full-Rate Production DR For MAIS - Any time an Economic Analysis is required—either by statute or by the MDA
Test and Evaluation Master Plan (TEMP)	This Instruction	MS A (test and evaluation strategy only) MS B MS C (update, if necessary) Full-Rate Production DR
Operational Test Agency Report of Operational Test and Evaluation Results	This Instruction	MS B MS C Full-Rate Production DR
Component Live-Fire Test and Evaluation Report (N/A for AISs) (Covered Systems Only)	This Instruction	Completion of Live Fire Test and Evaluation
Program Protection Plan (PPP) (for programs with critical program information) (includes Anti-Tamper Annex) (also summarized in the acquisition strategy)	DoD Directive 5200.39, reference (au)	MS B (based on approved requirements in CDD) MS C
Exit Criteria	This Instruction	Program Initiation for Ships MS A MS B MS C Each Review
Defense Acquisition Executive Summary (DAES) RCS: DD-AT&L(Q)1429	This Instruction	Quarterly Upon POM or BES submission Upon unit cost breach
ADM	This Instruction	Program Initiation for Ships MS A MS B MS C Each Review

Earned Value Management Systems (EVMS)	OMB Circular A-11, Part 7, reference (d)	Implement EVMS guidelines in ANSI/EIA-748-1998 (reference (av)) and conduct Integrated Baseline Reviews (applies to contracts/agreements for RDT&E over $73 million and procurement or O&M over $315 million, both in FY 2000 constant dollars)
* For a MAIS acquisition program, required by Pub.L. 107-248, Section 8088, reference (t), at Milestones A and B, and at the full-rate production decision (or their equivalents).		

Table E3.T3. Contract Reporting Requirements

REQUIRED REPORT	SOURCE	WHEN REQUIRED
Contractor Cost Data Report (CCDR)	DoD 5000.4-M-1, reference (aw) This Instruction	• All major contracts and subcontracts, regardless of contract type, for ACAT I programs valued at more than $50 million (FY 2002 constant dollars) • Not required for contracts priced below $7 million (FY 2002 constant dollars) • The CCDR requirement on high-risk or high-technical-interest contracts priced between $7 and $50 million is left to the discretion of the Cost Working Integrated Product Team (IPT) • Not required for procurement of commercial systems, or for non-commercial systems bought under competitively awarded, firm fixed-price contracts, as long as competitive conditions continue to exist
Software Resources Data Report (SRDR)	This Instruction	All major contracts and subcontracts, regardless of contract type, for contractors developing/producing software elements within ACAT I and ACAT IA programs for any software development element with a projected software effort greater than $25M (FY 2002 constant dollars). Submit data on each software element at the following times: -180 days prior to contract award -60 days after contract award -60 days after start of subsequent software releases -within 120 days after software release or final delivery

E4. ENCLOSURE 4
IT CONSIDERATIONS

E4.1. Mission-Critical/Mission-Essential Information System

E4.1.1. Mission-Critical Information System. A system that meets the definitions of "information system" and "national security system" in the CCA (reference (l)), the loss of which would cause the stoppage of warfighter operations or direct mission support of warfighter operations. (Note: The designation of mission critical shall be made by a Component Head, a Combatant Commander, or their designee. A financial management IT system shall be considered a mission-critical IT system as defined by the USD(C).) A "Mission-Critical Information Technology System" has the same meaning as a "Mission-Critical Information System."

E4.1.2. Mission-Essential Information System. A system that meets the definition of "information system" in reference (l), that the acquiring Component Head or designee determines is basic and necessary for the accomplishment of the organizational mission. (Note: The designation of mission essential shall be made by a Component Head, a Combatant Commander, or their designee. A financial management IT system shall be considered a mission-essential IT system as defined by the USD(C).) A "Mission-Essential Information Technology System" has the same meaning as a "Mission-Essential Information System."

E4.2. IT System Procedures

E4.2.1. The MDA shall not approve program initiation or entry into any phase that requires milestone approval for an acquisition program (at any level) for a mission-critical or mission-essential IT system until the DoD Component CIO confirms or certifies (for MAIS only) that the system is being developed in accordance with reference (l). At a minimum, the DoD Component CIO's confirmation or certification shall include a written description of the three materiel questions of section 3.6.4 and the considerations in Table E4.T1.

E4.2.2. PMs shall prepare a table such as the one illustrated at Table E4.T1. to indicate which acquisition documents correspond to the CCA requirements. DoD Component CIOs shall use the acquisition documents identified in the table to assess CCA compliance. The requirements for submission of written confirmation or certification (for MAIS only) shall be satisfied by the DoD Component CIO's concurrence with the PM's CCA Compliance Table. Issues related to compliance shall be resolved via the IPT process. The cognizant PSA shall coordinate on the CCA Compliance Table. No Milestone A, B, or Full-Rate Production decision (or their equivalent) shall be granted for a MAIS until the DoD CIO certifies that the MAIS program is being developed in accordance with the CCA.

E4.2.3. For MDAP and MAIS programs, the DoD Component CIO's confirmation (for MDAP) and certification (for MAIS) shall be provided to both the DoD CIO and the MDA.

E4.2.4. The DoD Components shall not award a contract for the acquisition of a mission-critical or mission-essential IT system, at any level, until the following have been accomplished:

E4.2.4.1. The DoD Component registers the system with the DoD CIO;

E4.2.4.2. The DoD CIO determines the system has an appropriate information assurance strategy; and

E4.2.4.3. The DoD Component CIO confirms that the system is being developed in accordance with the CCA by complying with paragraph E4.2.1 (above).

E4.2.5. The requirement to confirm or, for MAIS only, to certify CCA compliance applies to milestone decisions for each increment of an evolutionary acquisition. The requirements of

the CCA apply to all IT (including NSS) acquisitions, but subparagraph E4.2.4, above, applies only to mission-critical and mission-essential IT systems.

E4.2.6. At Milestone C, for MAIS, the MDA shall approve, in coordination with DOT&E, the quantity and location of sites for a limited deployment for IOT&E.

E4.2.7. When the use of commercial IT is considered viable, maximum leverage of and coordination with the DoD Enterprise Software Initiative shall be made.

E4.2.8. For financial management MAIS acquisition programs, the MDA shall not grant any milestone or full-rate production approval, or their equivalent, until the USD(C) certifies that the system is being developed and managed in accordance with the DoD Financial Management Enterprise Architecture (reference (t) and Sec.1004 of Pub.L. 107-314 (reference (ax))).

E4.2.9. An amount in excess of $1,000,000 may be obligated for defense financial system improvement (i.e., a new, or modification of, a budgetary, accounting, finance, enterprise resource planning, or mixed (financial and non-financial) information system) only if the USD(C) determines and certifies that the system is being developed or modified, and acquired and managed in a manner that is consistent with both the DoD Financial Management Enterprise Architecture and the DoD Financial Management Enterprise Architecture Transition Plan. The USD(C) shall provide such certification to the MDA before any milestone or full-rate production approval, or their equivalent, is made by the MDA.

Table E4.T1. CCA Compliance Table

Requirements Related to the Clinger-Cohen Act (CCA) of 1996 (reference (l))	Applicable Program Documentation **
*** Make a determination that the acquisition supports core, priority functions of the Department	ICD Approval
*** Establish outcome-based performance measures linked to strategic goals	ICD, CDD, CPD and APB approval
*** Redesign the processes that the system supports to reduce costs, improve effectiveness and maximize the use of COTS technology	Approval of the ICD, Concept of Operations, AoA, CDD, and CPD
* No Private Sector or Government source can better support the function	Acquisition Strategy page XX, para XX AoA page XX
* An analysis of alternatives has been conducted	AoA
* An economic analysis has been conducted that includes a calculation of the return on investment; or for non-AIS programs, a Life-Cycle Cost Estimate (LCCE) has been conducted	Program LCCE Program Economic Analysis for MAIS
There are clearly established measures and accountability for program progress	Acquisition Strategy page XX APB
The acquisition is consistent with the Global Information Grid policies and architecture, to include relevant standards	APB (Interoperability KPP) C4ISP (Information Exchange Requirements)
The program has an information assurance strategy that is consistent with DoD policies, standards and architectures, to include relevant standards	Information Assurance Strategy
To the maximum extent practicable, (1) modular contracting has been used, and (2) the program is being implemented in phased, successive increments, each of which meets part of the mission need and delivers measurable benefit, independent of future increments	Acquisition Strategy page XX
The system being acquired is registered	Registration Database

* For weapons systems and command and control systems, these requirements apply to the extent practicable (40 U.S.C. 1451, reference (ay))

** The system documents/information cited are examples of the most likely but not the only references for the required information. If other references are more appropriate, they may be used in addition to or instead of those cited.

***These requirements are presumed to be satisfied for Weapons Systems with embedded IT and for Command and Control Systems that are not themselves IT systems

E5. ENCLOSURE 5

INTEGRATED TEST AND EVALUATION (T&E)

E5.1. The PM, in concert with the user and test and evaluation communities, shall coordinate developmental test and evaluation (DT&E), operational test and evaluation (OT&E), LFT&E, family-of-systems interoperability testing, information assurance testing, and modeling and simulation (M&S) activities, into an efficient continuum, closely integrated with requirements definition and systems design and development. The T&E strategy shall provide information about risk and risk mitigation, provide empirical data to validate models and simulations, evaluate technical performance and system maturity, and determine whether systems are operationally effective, suitable, and survivable against the threat detailed in the System Threat Assessment. The T&E strategy shall also address development and assessment of the weapons support equipment during the SDD phase, and into production, to ensure satisfactory test system measurement performance, calibration traceability and support, required diagnostics, and safety. Adequate time and resources shall be planned to support pre-test predictions and post-test reconciliation of models and test results, for all major test events. The PM, in concert with the user and test communities, shall provide safety releases to the developmental and operational testers prior to any test using personnel.

E5.2. The PM shall design DT&E objectives appropriate to each phase and milestone of an acquisition program. Testing shall be event driven and monitored by the use of success criteria within each phase, OT&E entrance criteria, and other metrics designed to measure progress and support the decision process. The OTA shall design OT&E objectives appropriate to each phase and milestone of a program, and submit them to the PM for inclusion in the Test and Evaluation Master Plan (TEMP). Completed IOT&E and completed LFT&E shall support a beyond LRIP decision for ACAT I and II programs for conventional weapons systems designed for use in combat. For this purpose, OT&E shall require more than an OA based exclusively on computer modeling, simulation, or an analysis of system requirements, engineering proposals, design specifications, or any other information contained in program documents (10 U.S.C. 2399 and 10 U.S.C. 2366, references (h) and (ae)).

E5.3. T&E Strategy

E5.3.1. Projects that undergo a Milestone A decision shall have a T&E strategy that shall primarily address M&S, including identifying and managing the associated risk, and that shall evaluate system concepts against mission requirements. Pre-Milestone A projects shall rely on the ICD as the basis for the evaluation strategy. For programs on the OSD T&E Oversight List, the T&E strategy shall be submitted to USD(AT&L) and DOT&E for approval.

E5.3.2. The T&E strategy for a program using an evolutionary acquisition strategy shall remain consistent with the time-phased requirements in the CDD/CPD.

E5.4. T&E Planning

E5.4.1. TEMP. The PMs for MDAPs, MAIS Acquisition Programs, and programs on the OSD T&E Oversight List shall submit a TEMP to the USD(AT&L) and the DOT&E for approval to support Milestones B and C and the Full-Rate Production decision. The TEMP shall describe planned developmental, operational, and live fire testing, including measures to evaluate

the performance of the system during these test periods; an integrated test schedule; and the resource requirements to accomplish the planned testing. The MDA or designee shall ensure that IOT&E entrance criteria, to be used to determine IOT&E readiness certification in support of each planned operational test, are developed and documented in the TEMP.

E5.4.2. Planning shall provide for completed DT&E, IOT&E, and LFT&E, as required, before entering full-rate production.

E5.4.3. Test planning for commercial and non-developmental items shall recognize commercial testing and experience, but nonetheless determine the appropriate DT&E, OT&E, and LFT&E needed to ensure effective performance in the intended operational environment.

E5.4.4. Test planning and conduct shall take full advantage of existing investment in DoD ranges, facilities, and other resources, including the use of embedded instrumentation.

E5.4.5. Planning shall consider the potential testing impacts on the environment (42 U.S.C. 4321-4370d and E.O. 12114, references (x) and (az)).

E5.4.6. The concept of early and integrated T&E shall emphasize prototype testing during system development and demonstration and early OAs to identify technology risks and provide operational user impacts.

E5.4.7. Appropriate use of accredited models and simulation shall support DT&E, IOT&E, and LFT&E.

E5.4.8. The DOT&E and the Deputy Director, DT&E/Office of Defense Systems (DS), Office of the USD(AT&L), shall have full and timely access to all available developmental, operational, and live-fire T&E data and reports.

E5.4.9. Interoperability Testing. All DoD MDAPs, programs on the OSD T&E Oversight list, post-acquisition (legacy) systems, and all programs and systems that must interoperate, are subject to interoperability evaluations throughout their life cycles to validate their ability to support mission accomplishment. For IT systems, including NSS, with interoperability requirements, the Joint Interoperability Test Command (JITC) shall provide system interoperability test certification memoranda to the Director, Joint Staff J-6, throughout the system life-cycle and regardless of ACAT.

E5.5. Developmental Test and Evaluation (DT&E). During DT&E, the materiel developer shall:

E5.5.1. Identify the technical capabilities and limitations of the alternative concepts and design options under consideration;

E5.5.2. Identify and describe design technical risks;

E5.5.3. Stress the system under test to at least the limits of the Operational Mode Summary/Mission Profile, and, for some systems, beyond the normal operating limits to ensure the robustness of the design;

E5.5.4. Assess technical progress and maturity against critical technical parameters, to include interoperability, documented in the TEMP;

E5.5.5. Assess the safety of the system/item to ensure safety during OT and other troop-supported testing and to support success in meeting design safety criteria;

E5.5.6. Provide data and analytic support to the decision process to certify the system ready for IOT&E;

E5.5.7. Conduct information assurance testing on any system that collects, stores, transmits, or processes unclassified or classified information.

E5.5.8. In the case of IT systems, including NSS, support the DoD Information Technology Security Certification and Accreditation Process and Joint Interoperability Certification process;

E5.5.9. In the case of financial management, enterprise resource planning, and mixed financial management systems, the developer shall conduct an independent assessment of compliance factors established by the Office of the USD(C); and,

E5.5.10. Prior to full-rate production, demonstrate the maturity of the production process through Production Qualification Testing of LRIP assets.

E5.6. Readiness for IOT&E. The Services shall each establish an Operational Test Readiness Process for programs on the OSD T&E Oversight List, consistent with the following requirements:

E5.6.1. The process shall include a review of DT&E results; an assessment of the system's progress against critical technical parameters documented in the TEMP; an analysis of identified technical risks to verify that those risks have been retired during developmental testing; and a review of the IOT&E entrance criteria specified in the TEMP. Programs shall provide copies of the DT&E report and the progress assessment to USD(AT&L) and DOT&E.

E5.6.2. The Service Acquisition Executive shall evaluate and determine materiel system readiness for IOT&E.

E5.7. Operational Test and Evaluation (OT&E)

E5.7.1. OT&E shall determine the operational effectiveness and suitability of a system under realistic operational conditions, including combat; determine if thresholds in the approved CPD and critical operational issues have been satisfied; and assess impacts to combat operations.

E5.7.2. The lead OTA shall brief the DOT&E on concepts for an OT&E 120 days prior to start. They shall submit the OT&E plan 60 days prior, and shall report major revisions as they occur.

E5.7.3. Typical users shall operate and maintain the system or item under conditions simulating combat stress and peacetime conditions.

E5.7.4. The independent OTAs shall use production or production representative articles for the dedicated phase of IOT&E that supports the full-rate production decision (or for ACAT IA or other acquisition programs, the full-deployment decision).

E5.7.5. Hardware and software alterations that materially change system performance, including system upgrades and changes to correct deficiencies, shall undergo OT&E.

E5.7.6. OTAs shall conduct an independent, dedicated phase of IOT&E before full-rate production to evaluate operational effectiveness and suitability, as required by reference (h).

E5.7.7. All weapon, Command, Control, Communications, Computers, Intelligence, Surveillance, and Reconnaissance (C4ISR), and information programs that are dependent on

external information sources, or that provide information to other DoD systems, shall be tested and evaluated for information assurance.

E5.7.8. The DOT&E shall determine the quantity of articles procured for IOT&E for MDAPs; the cognizant OTA shall make this decision for non-MDAPs (reference (h)).

E5.7.9. The DOT&E shall assess the adequacy of IOT&E and LFT&E, and evaluate the operational effectiveness, suitability, and survivability, as applicable, of systems under DOT&E oversight. DOT&E-oversight programs beyond LRIP, shall require continued DOT&E test plan approval, monitoring, and FOT&E reporting to:

E5.7.9.1. Complete IOT&E activity;

E5.7.9.2. Refine IOT&E estimates;

E5.7.9.3. Verify correction of deficiencies;

E5.7.9.4. Evaluate significant changes to system design or employment; and

E5.7.9.5. Evaluate whether or not the system continues to meet operational needs and retain operational effectiveness in a substantially new environment, as appropriate.

E5.7.10. OT&E Information Promulgation

E5.7.10.1. The responsible test organization shall release valid test data and factual information in as near real-time as possible to all DoD organizations and contractors with a need to know. Data may be preliminary and shall be identified as such.

E5.7.10.2. To protect the integrity of the OTA evaluation process, release of evaluation results may be withheld until the final report, according to the established policies of each OTA. Nothing in this policy shall be interpreted as limiting the statutory requirement for immediate access to all OT&E results by DOT&E.

E5.7.10.3. The primary intent of this policy is to give developing agencies visibility of factual data produced during OT&E, while not allowing the developmental agency any influence over the outcome of those evaluations.

E5.7.11. Use of Contractors in Support of OT&E

E5.7.11.1. Per reference (h), persons employed by the contractor for the system being developed may only participate in OT&E of major defense acquisition programs to the extent that is planned for them to be involved in the operation, maintenance, and other support of the system when deployed in combat.

E5.7.11.2. A contractor that has participated (or is participating) in the development, production, or testing of a system for a DoD Component (or for another contractor of the Department of Defense) may not be involved in any way in establishing criteria for data collection, performance assessment, or evaluation activities for OT&E. The DOT&E may waive such limitation if the DOT&E determines, in writing, that sufficient steps have been taken to ensure the impartiality of the contractor in providing the services. These limitations do not apply to a contractor that has participated in such development, production, or testing, solely in test or test support on behalf of the Department of Defense.

E5.8. OSD T&E Oversight List. The DOT&E and the Director, DS, shall jointly, and in consultation with the T&E executives of the cognizant DoD Components, determine the

programs designated for OSD T&E oversight. The DoD memorandum entitled "Designation of Programs for OSD Test and Evaluation (T&E) Oversight" (reference (ba)) identifies these programs.

E5.9. Live-Fire Test and Evaluation (LFT&E)[1]. Reference (ae) mandates LFT&E and formal LFT&E reporting for all covered systems. The DOT&E shall approve the LFT&E strategy for covered systems prior to Milestone B.

E5.10. Modeling and Simulation (M&S). The PM shall plan for M&S throughout the acquisition life cycle. The PM shall identify and fund required M&S resources early in the life cycle

E5.11. Foreign Comparative Testing (FCT). 10 U.S.C. 2350a(g) (reference (ap)) prescribes funding for U.S. T&E of selected allied and friendly foreign countries' equipment and technologies when such items and technologies have potential to satisfy approved DoD requirements. The USD(AT&L) shall centrally manage FCT and notify the Speaker of the House, the President of the Senate, the House Armed Services Committee, the Senate Armed Services Committee, and the Appropriations Committees of the Senate and the House of Representatives at least 30 days prior to committing funds to start a new FCT evaluation.

E5.12. Testing Increments of an Evolutionary Acquisition Program. The structure of these test activities depends on the program acquisition strategy. In general, all increment testing programs shall:

E5.12.1. Provide for early involvement of the Service OTA/JITC in DT&E and test planning;

E5.12.2. Conduct adequate DT&E, LFT&E, and IOT&E of each new incremental capability;

E5.12.3. Integrate, as appropriate, and without compromising the specific requirements of the different types of testing, successive periods of DT&E, LFT&E, and IOT&E;

E5.12.4. Tailor test content and reporting against earlier test results, evaluating at a minimum the increment of mission accomplishment and survivability required of the new increment, plus whether or not performance previously demonstrated by the previous increment has been degraded;

E5.12.5. The Service shall perform an independent operational assessment prior to release of each successive increment to the user; and

E5.12.6. For programs under OT&E and/or LFT&E oversight, support DOT&E's intended schedule for reporting to the Secretary of Defense and Congressional defense committees, whether through phased submittal of dedicated reports or through DOT&E annual reports to the Congress.

[1] Not applicable to ACAT IA programs.

E6. ENCLOSURE 6

RESOURCE ESTIMATION

E6.1. Cost Analysis Improvement Group (CAIG) Independent Life-Cycle Cost Estimates (LCCEs). The OSD CAIG shall prepare independent LCCEs per 10 U.S.C. 2434 (reference (ah)). The CAIG shall provide the MDA with an independent LCCE at major decision points as specified in statute, and when directed by the MDA. The MDA shall consider the independent LCCE before approving entry into SDD or into Production and Deployment. The CAIG shall also prepare an ICE for ACAT IC programs at the request of the USD(AT&L) or the ASD(C3I). A CAIG ICE is not required for ACAT IA programs. (DoD Directive 5000.4, (reference (bb)))

E6.2. Cost Analysis Requirements Description (CARD). For ACAT I and IA programs, the PM shall prepare, and an authority no lower than the DoD Component Program Executive Officer (PEO), shall approve the CARD. DoD 5000.4-M, reference (bc), specifies CARD content. For joint programs, the CARD shall cover the common program as agreed to by all participating DoD Components, as well as any DoD Component-unique requirements. The teams preparing the program office LCCE, the component cost analysis, if applicable, and the independent LCCE shall receive a draft CARD 180 days, and the final CARD 45 days, prior to a planned OIPT or DoD Component review, unless the OIPT leader agrees to other due dates.

E6.3. CCDR System. The CCDR system is the primary DoD means of collecting data on the costs and resource usage that DoD contractors incur in performing DoD programs. The Chair, CAIG, shall prescribe a format for the CCDR and the SRDR, and establish reporting system policies in DoD 5000.4.M-1, reference (aw). The Chair shall monitor the implementation of policy to ensure consistent and appropriate application throughout the Department of Defense. The Chair may waive the information requirements of Table E3.T3. of enclosure 3.

E6.4. CAIG Procedures. The DoD Component responsible for acquisition of a system shall cooperate with the CAIG and provide the cost, programmatic, and technical information required for estimating costs and appraising cost risks. The DoD Component shall also facilitate CAIG staff visits to the program office, product centers, test centers, and system contractor(s). The process through which the ICE is prepared shall be consistent with the following policies (reference (aw)):

E6.4.1. The CAIG shall participate in IPT meetings (Cost Working-level IPTs/Integrating IPTs/OIPTs);

E6.4.2. The CAIG, DoD Components, and PM shall share data, models and use the same CARD;

E6.4.3. The CAIG, DoD Components, and PM shall raise and resolve issues in a timely manner and at the lowest possible level;

E6.4.4. The CAIG shall brief the preliminary, independent, LCCE to the PM 45 days before the OIPT, and the final estimate 21 days before the OIPT;

E6.4.5. The CAIG, DoD Component, and PM shall address differences between the independent LCCE and the PM/Service estimate;

E6.4.6. The PM shall identify issues projected to be brought to the OIPT to the Chairman, CAIG, in a timely manner.

E6.5. Analysis of Alternatives Procedures. For potential and designated ACAT I and IA programs, the Director, Program Analysis & Evaluation (D,PA&E) shall direct development of the analysis of alternatives by preparing initial guidance, reviewing the analysis plan, and reviewing the final analysis products. The guidance shall be issued to the DoD Component, or for ACAT IA programs, to the office of the PSA responsible for the mission area. The DoD Component or the PSA shall designate responsibility for completion of the AoA, but it may not be assigned to the PM. An analysis plan shall be provided to the Office of the D,PA&E for review prior to the start of the AoA and the final AoA shall be provided to the D,PA&E not later than 60 days prior to the DAB or ITAB meeting for milestone reviews. The D,PA&E shall evaluate the AoA and provide an assessment to the Head of the DoD Component or PSA and to the MDA. In this evaluation, the D,PA&E shall assess the extent to which the AoA:

E6.5.1. Illuminated capability advantages and disadvantages;

E6.5.2. Considered joint operational plans;

E6.5.3. Examined sufficient feasible alternatives;

E6.5.4. Discussed key assumptions and variables and sensitivity to changes in these;

E6.5.5. Assessed technology risk and maturity; and

E6.5.6. Calculated costs.

E7. ENCLOSURE 7
HUMAN SYSTEMS INTEGRATION (HSI)

E7.1. General. The PM shall have a comprehensive plan for HSI in place early in the acquisition process to optimize total system performance, minimize total ownership costs, and ensure that the system is built to accommodate the characteristics of the user population that will operate, maintain, and support the system. HSI planning shall be summarized in the acquisition strategy and address the following:

E7.2. Human Factors Engineering. The PM shall take steps (e.g., contract deliverables and Government/contractor IPT teams) to ensure human factors engineering/cognitive engineering is employed during systems engineering over the life of the program to provide for effective human-machine interfaces and to meet HSI requirements. Where practicable and cost effective, system designs shall minimize or eliminate system characteristics that require excessive cognitive, physical, or sensory skills; entail extensive training or workload-intensive tasks; result in mission-critical errors; or produce safety or health hazards.

E7.3. Personnel. The PM shall work with the personnel community to define the human performance characteristics of the user population based on the system description, projected characteristics of target occupational specialties, and recruitment and retention trends. To the extent possible, systems shall not require special cognitive, physical, or sensory skills beyond that found in the specified user population. For those programs that require skill requirements that exceed the knowledge, skills, and abilities of current military occupational specialties or that require additional skill indicators or hard-to-fill military occupational specialties, the PM shall consult with personnel communities to identify readiness, personnel tempo (PERSTEMPO), and funding issues that impact program execution.

E7.4. Habitability. The PM shall work with habitability representatives to establish requirements for the physical environment (e.g., adequate space and temperature control) and, if appropriate, requirements for personnel services (e.g., medical and mess) and living conditions (e.g., berthing and personal hygiene) for conditions that have a direct impact on meeting or sustaining system performance or that have such an adverse impact on quality of life and morale that recruitment or retention is degraded.

E7.5. Manpower. In advance of contracting for operational support services, the PM shall work with the manpower community to determine the most efficient and cost-effective mix of DoD manpower and contract support. Once the Manpower Estimate is approved by the DoD Component manpower authority, it shall serve as the authoritative source for reporting manpower in other program documentation.

E7.6. Training. The PM shall work with the training community to develop options for individual, collective, and joint training for operators, maintainers and support personnel and, where appropriate, base training decisions on training effectiveness evaluations. The PM shall address major elements of the training system described in DoD Directive 1430.13, reference (bd), and place special emphasis on options that enhance user capabilities, maintain skill proficiencies, and reduce individual and collective training costs. The PM shall develop training system plans to maximize the use of new learning techniques, simulation technology, embedded

training, and instrumentation systems that provide anytime, anyplace training and reduce the demand on the training establishment. Where possible, the PM shall maximize the use of simulation-supported embedded training, and the training systems shall fully support and mirror the interoperability of the operational system. For training programs that require training infrastructure modifications, the PM shall identify technology, schedule, and funding issues that impact program execution.

E7.7. Environment, Safety and Occupational Health (ESOH). As part of risk reduction, the PM shall prevent ESOH hazards where possible, and shall manage ESOH hazards where they cannot be avoided. The acquisition strategy shall incorporate a summary of the Programmatic ESOH Evaluation (PESHE), including ESOH risks, a strategy for integrating ESOH considerations into the systems engineering process, identification of ESOH responsibilities, a method for tracking progress, and a compliance schedule for NEPA (42 U.S.C. 4321-4370d and Executive Order 12114, references (x) and (az)). During system design, the PM shall document hazardous materials used in the system and plan for the system's demilitarization and disposal. The CAE (or for joint programs, the CAE of the Lead Executive Component) or designee, is the approval authority for system-related NEPA and E.O. 12114 documentation. For acceptance of ESOH mishap risks identified by the program, the CAE is the acceptance authority for high risks, PEO-level for serious risks, and the PM for medium and low risks as defined in the industry standard for system safety.

E7.8. Survivability. For systems with missions that might require exposure to combat threats, the PM shall address personnel survivability issues including protection against fratricide, detection, and instantaneous, cumulative, and residual nuclear, biological, and chemical effects; the integrity of the crew compartment; and provisions for rapid egress when the system is severely damaged or destroyed. The PM shall address special equipment or gear needed to sustain crew operations in the operational environment.

E8. ENCLOSURE 8

ACQUISITION OF SERVICES

E8.1. General. Section 801 of the National Defense Authorization Act for Fiscal Year 2002, Pub. L. 107-107, reference (be), required establishment of a management structure for the procurement of services by the Department of Defense. This management structure requires that the acquisition of services shall be based on clear, performance-based requirements, and require identified and measurable outcomes properly planned and administered to achieve the intended results. The following guidance shall apply.

E8.2. Outcomes

E8.2.1. All service acquisitions shall use a strategic approach that includes developing a picture of what the Department of Defense is spending on services; an enterprise-wide approach to procuring services; and developing new ways of doing business.

E8.2.2. All service acquisitions shall be acquired by business arrangements that are in the best interests of the Department of Defense and are entered into or issued and managed in compliance with applicable statutes, regulations, directives, and other requirements, regardless of whether the services are acquired by the Department of Defense or by an official of the United States outside the Department of Defense. PMs shall coordinate with the DoD Component manpower authority in advance of contracting for operational support services to ensure that tasks and duties that are designated as inherently governmental or exempt are not contracted.

E8.3. Decision Authorities shall establish mandatory procedures for assigned service acquisitions.

E8.4. Each DoD Component shall establish a management review process that provides for consistent review and approval of service acquisitions.

E8.5. Each acquisition of services shall have:

E8.5.1. A documented acquisition strategy, updated when changes occur;

E8.5.2. Metrics for cost, schedule and performance;

E8.5.3. An approved data system for the collection and reporting of required data.

E8.6. The Decision Authority shall conduct execution reviews to assess progress against the metrics.

E8.7. Management of the acquisition of services is the responsibility of the USD(AT&L), the ASD(C3I) for information technology, the CAE, the Head of Contracting Activity (HCA) (for those DoD Components without a CAE), or such designated officials in each Service/Agency as identified by the CAE or HCA (for those DoD Components without a CAE). Each of these designated officials can be a Decision Authority, and have the authority to exercise approval over the service acquisition, provided the designated official is independent of the official developing and executing the service acquisition strategy.

E8.8. The acquisition of services may require the execution of multiple contracts or other instruments for committing or obligating funds (e.g. funds transfers; placing orders under existing contracts), therefore, the management level shall be determined using the total planned dollar value (including options, contingencies, funds transfers, provisioning, etc) of the acquisition.

E9. ENCLOSURE 9

PROGRAM MANAGEMENT

E9.1. Assignment of Program Managers. A PM shall be designated for each acquisition program. This designation shall be made no later than program initiation. It is essential that the PM have an understanding of user needs and constraints, familiarity with development principles, and requisite management skills and experience. If the acquisition is for services, the PM shall be familiar with DoD guidance on acquisition of services. A PM and a deputy PM of an ACAT I, IA, or II program shall be assigned to the position at least until completion of the major milestone that occurs closest in time to the date on which the person has served in the position for 4 years in accordance with the Defense Acquisition Workforce Improvement Act (reference (bf)). Upon designation, the PM shall be given budget guidance and a written charter of his or her authority, responsibility, and accountability for accomplishing approved program objectives.

E9.2. Assignment of Program Executive Responsibility

E9.2.1. Unless a waiver is granted for a particular program by the USD(AT&L) or the ASD(C3I)/DoD CIO, CAEs shall assign acquisition program responsibilities to a PEO for all ACAT I, ACAT IA, and sensitive classified programs, or for any other program determined by the CAE to require dedicated executive management.

E9.2.2. The PEO shall be dedicated to executive management and shall not have other command responsibilities.

E9.2.3. The CAE shall make this assignment no later than program initiation; or within 3 months of estimated total program cost reaching the appropriate dollar threshold for ACAT I and ACAT IA programs. CAEs may determine that a specific PM shall report directly, without being assigned to a PEO, whenever such direct reporting is appropriate. The CAE shall notify the USD(AT&L) or the ASD(C3I)/DoD CIO of the decision to have a PM report directly to the CAE.

E9.2.4. Acquisition program responsibilities for programs not assigned to a PEO or a direct-reporting PM shall be assigned to a commander of a systems, logistics, or materiel command. In order to transition from a PEO to a commander of a systems, logistics, or materiel command, a program or increment of capability shall, at a minimum, have passed Initial Operating Capability (IOC), have achieved full-rate production, be certified as interoperable within the intended operational environment, and be supportable as planned.

E9.3. Life-Cycle Management of Information. PMs shall comply with record keeping responsibilities under the Federal Records Act for the information collected and retained in the form of electronic records. (See DoD Directive 5015.2, reference (bg)).) Electronic record keeping systems shall preserve the information submitted, as required by 44 U.S.C. 3101, reference (bh)) and implementing regulations. Electronic record keeping systems shall also provide, wherever appropriate, for the electronic acknowledgment of electronic filings that are successfully submitted. PMs shall consider the record keeping functionality of any systems that store electronic documents and electronic signatures to ensure users have appropriate access to the information and can meet the Agency's record keeping needs.

E9.4. International Cooperative Program Management

E9.4.1. An international cooperative program is any acquisition system, subsystem, component, or technology program with an acquisition strategy that includes participation by one or more foreign nations, through an international agreement, during any phase of a system's life cycle. All AT&L-related international agreements may use the USD(AT&L)-issued streamlined procedures in the Defense Acquisition Guidebook (reference (bi)) for review and approval rather than the procedures in DoD Directive 5530.3, reference (bj). All international cooperative programs shall fully comply with foreign disclosure and program protection requirements. Programs containing classified information shall have a Delegation of Disclosure Authority Letter or other written authorization issued by the DoD Component's cognizant foreign disclosure office prior to entering discussions with potential foreign partners.

E9.4.2. Acquisition and Cross Servicing Agreement (ACSA). PMs and others responsible for the acquisition and reciprocal transfer of logistic support, supplies, and services shall be aware of and understand the legal authority (10 U.S.C. 2341 and 2342, references (bk) and (bl)) for the use of ACSAs and the potential impact that ACSA acquisition and reciprocal transfers may have on their on support strategies.

E9.4.3. Additional Funding Considerations. The DoD Components shall not terminate or substantially reduce participation in international cooperative ACAT ID programs under signed international agreements without USD(AT&L) approval; or in international cooperative ACAT IAM programs without ASD(C3I) approval. A DoD Component may not terminate or substantially reduce U.S. participation in an international cooperative program until after providing notification to the USD(AT&L) or the ASD(C3I). As a result of that notification, the USD(AT&L) or the ASD(C3I) may require the DoD Component to continue to provide some or all of the funding for that program in order to minimize the impact on the international cooperative program. Substantial reduction is defined as a funding or quantity decrease of 25 percent or more in the total funding or quantities in the latest President's Budget for that portion of the international cooperative program funded by the DoD Component seeking the termination or reduced participation.

E9.5. Joint Program Management. The DoD Components shall not terminate or substantially reduce participation in joint ACAT ID programs without Requirements Authority review and USD(AT&L) approval; or in joint ACAT IA programs without Requirements Authority review and ASD(C3I) approval. The USD(AT&L) or the ASD(C3I) may require a DoD Component to continue some or all funding, as necessary, to sustain the joint program in an efficient manner, despite approving their request to terminate or reduce participation. Substantial reduction is defined as a funding or quantity decrease of 50 percent or more in the total funding or quantities in the latest President's Budget for that portion of the joint program funded by the DoD Component seeking the termination or reduced participation.

THE UNDER SECRETARY OF DEFENSE
3010 DEFENSE PENTAGON
WASHINGTON, DC 20301-3010

ACQUISITION,
TECHNOLOGY
AND LOGISTICS

MAR 1 9 2007

MEMORANDUM FOR SECRETARIES OF THE MILTARY DEPARTMENTS
CHAIRMAN OF THE JOINT CHIEFS OF STAFF
COMMANDER, U.S. SPECIAL OPERATIONS COMMAND
DIRECTOR, MISSILE DEFENSE AGENCY

SUBJECT: Insensitive Munitions Strategic Planning

This memorandum modifies the Department of Defense policy for the submission of Insensitive Munitions (IM) Strategic Plans to the Joint Requirements Oversight Council (JROC) and the Office of the Under Secretary of Defense (Acquisition, Technology, and Logistics) (OUSD(AT&L)). IM Strategic Plans will be required biennially beginning with the FY2009/2010 plans. The submission date for the first biennial plan is February 15, 2008. The JROC approval of the FY2007 IM Strategic Plans covers all identified procurement of non-IM compliant munitions through FY2008. Attached is additional guidance for the February 2008 submission—it will improve the quality of the strategic plans and make the review more efficient and effective.

IM Strategic Planning has provided the JROC and OUSD(AT&L) with a comprehensive view of the IM posture of the Department's total munitions portfolio and the IM investment strategies of the Services' Program Executive Officers (PEOs). The knowledge gained through the strategic planning process will assist the Director, Defense Research and Engineering, and other Science and Technology planners, in closing the technology gaps identified by PEOs and users.

The OSD point of contact is Mr. Tony Melita (703-695-1382). The JROC point of contact is: Division Chief, J8 Capabilities and Acquisition Division (703-614-3682).

Kenneth J. Krieg

Attachments:
As stated

cc:
Director, Defense Research and Engineering

INSENSITIVE MUNITIONS STRATEGIC PLANS

Key Elements

Each Strategic Plan should include as a minimum:

- An executive summary that discusses the plan's key points and the methodology used in the development and decision process.

- A complete list of all munitions (e.g. legacy, developmental, in production, awaiting production, Advanced Technology Demonstration (ATD), Foreign Comparative Test (FCT), current inventory) for which that PEO has acquisition and lifecycle responsibility

- For each munition:
    - Munition characteristics including nomenclature, Mark and/or Mod, Net Explosive Weight, and energetic fills of each relevant component.
    - RDT&E and procurement profile (funding and quantity across the Future Years Defense Plan (FYDP))
    - Baseline IM performance (known or predicted) for the IM threats per MIL-STD-2105C and the hazard classification (HC) assigned (interim or final)
    - Ongoing and planned technology integration efforts aimed at IM improvement and HC reduction and the funding supporting such efforts, and
    - New technologies required for achieving full IM compliance and the schedule for technology maturity

- Munition system IM investment priorities and prioritization criteria

- Funded Service-specific and Joint investments to demonstrate and integrate new IM technologies

- All unfunded IM requirements

Definitions.

Term	Definition/ Clarification
ACTD	Advanced Concept Technology Demonstration
ATD	Advanced Technology Demonstration/Development
Baseline IM Reaction	The initial IM reaction or assessment assigned to a munition for the particular IMSP cycle
CM	Configuration Manager - The activity which retains responsibility for the Technical Data Package and which is directly responsible for the configuration management of a munition or item containing energetic material
Developmental Item	Includes any new munition or item containing energetic material, without regard to ACAT level, or source of manufacture, prior to MS C. These shall be evaluated as priority items (categorized as either Tier I or II items).
Energetic Material	Explosive, propellant, or pyrotechnic material per DoD 5000.1
Exempt Munitions	Any munition/item that was on contract or produced prior to 26 January 1999, as established by the criteria of the Gansler Memorandum, and for which there has been no further procurement actions and/or PIP
Funded IM Requirement	Refers to investments for IM characterization and/or improvements
IM Compliant	Passes all IM Tests as specified by a Service/Agency THA. Tests shall be scored or assessed by the appropriate Service/Agency IM Board or Council.
IM-Certified	An IM-compliant item that has been certified by the appropriate authority.
IM Investment	Refers to investments required to achieve IM-compliance, to include S&T, technology insertion, evaluation and qualification.
IM Waivers	An approved deviation from the requirement for munitions containing energetic materials to be IM compliant issued by the JROC.
Intermediate IM Reactions	The IM reaction that is expected as a result of a planned technology insertion effort
Legacy Munition	Legacy munitions are all items in the inventory that are either in procurement or expected to be procured.
OPR	Office of Primary Responsibility infers that the respective PEO has direct oversight responsibilities
Out of Cycle Munition Reviews	Munitions requiring review not included in the current IMSP that requires immediate procurement prior to the next IMSP cycle.
PIP	Product Improvement Program
POA&M	Plan of Action and Milestones

Priority Munition	Shall include all munitions and/or items containing energetic material as determined by the PEO to benefit from IM-improvement, based upon the prioritization criteria contained within the IMSP, All developmental items shall be categorized as Priority Items.
P3I	Preplanned Product Improvement
SDD	System Development and Demonstration
SLEP	Service Life Extension Program
Tier I Munitions	Non IM-compliant priority items that have fully funded POA&Ms.
Tier II Munitions	Non IM-compliant priority items that do not have fully funded POA&Ms.
Tier III Munitions	Non IM-compliant , non-priority items that are being procured by another PEO, such as SMCA as the OPR, in which that activity has retained configuration management authority.
Tier IV Munitions	Non IM-compliant , non-priority items that are or expected to be procured by the reporting PEO.
Tier V Munitions	Non-priority items with no further procurement and no window of opportunity anticipated.
Tier VI Munitions	IM-compliant, non-priority items that are being procured by another PEO, such as SMCA as the OPR, in which that activity has retained configuration management authority (IM-compliant equivalent of Tier III).
Tier VII Munitions	IM-compliant , non-priority items that are or expected to be procured by the reporting PEO (IM-compliant equivalent of Tier IV).
UFR	Unfunded Requirement - The aggregate of funding required, and unavailable, to develop and integrate technology, to include retrofitting, to obtain IM compliance
Window of Opportunity	Potential windows of opportunity include: new contract award, exercise of contract options, PIP, P3I, SLEP, maintenance, and spiral development efforts

Issues	Business Rule
Inconsistency with JROCMs (i.e., waiver duration and specific quantity) and PEOs' interpretation of previous JROCMs for IM waivers and actions required.	Rolling IM Waivers ▪ Previously issued IM waivers will be included in the IMSP. ▪ All Programs' IM efforts will be reviewed and addressed with each IMSP submission.
Inconsistency with the reporting of shaped charge jet (SCJ) testing.	▪ Service PEOs shall assess THA to include assessment of SCJ. ▪ If SCJ threat is not applicable to the munition, the Service PEO should provide justification.
Lack of reporting on multi-Service acquisition and procurement munitions.	▪ The PEO with Configuration Manager authority and the designated Service Acquisition PEO is responsible for addressing the item in each of their respective PEO IMSPs. ▪ The CM of a munition item is responsible for addressing the IM solution regardless if they are buying the round or not.
IMSP submissions did not clearly express action plan for Unfunded Requirements (UFR).	▪ IMSP submissions require PEOs to identify a strategy for addressing UFRs.
Inconsistency of reporting IM investment.	▪ Service PEOs will itemize specific IM investments; separating the cost of technology insertion from IM testing and evaluation to include cost associated with requalification and integration requirements
Reporting for Developmental items is inconsistent across all Service PEOs.	▪ All Service PEOs will address developmental items in their respective IMSP. ▪ A POA&M addressing the IM strategy for all developmental munitions is required. ▪ If the Service PEO is not addressing IM; justification as to why, is required in the IMSP submission.
Inconsistency between PEO IMSP (lack of detail; assumptions not fully described; methodology for drawing the priority line not always described).	▪ Service PEOs will adhere to the terms of reference (i.e., business rules, definitions, IM reactions, tables and executive summary templates) as directed by the FP FCB.

Plan of Action and Milestones (POA&M) Format

Note: POA&Ms, while an integral part of the PEO IMSP, must nevertheless be prepared with sufficient detail to withstand review on their individual merit alone as was the case prior to the IMSP process. As a result of this policy decision, redundancies between the IMSP and individual POA&Ms are expected. POA&Ms are required for **all Priority (Tier I and II, and all developmental)** items.

EXECUTIVE SUMMARY
Address the status of the program, applicable dates (decision and testing), IM approach, what programs are being leveraged, anticipated successes and shortfalls. Include a summary quad chart (discussed in Section 6 of the IMSP Outline).

1. INTRODUCTION
1.1 Purpose
1.2 Background
1.3 Scope of Work
1.3.1 Program Status

2. PROGRAM MANAGEMENT
2.1 Organization
2.2 IM Point of Contact

3. SYSTEM DESCRIPTION
3.1 Complete Description (include variants)
3.2 Complete list of Energetic Material (Table)
3.3 Functional Description
3.4 Component List & Description

4. THREAT HAZARD ASSESSMENT SUMMARY
4.1 Projected Threat Environment
4.2 Summary of Planned Logistical and Tactical Life-Cycle Profile
4.3 Recommended Tests

5. IM TEST RESULTS
5.1 IM Test Conditions Summary
5.2 Test Result Summary
5.3 Summary of Service Insensitive Munitions Board Recommendations

6. IM TECHNICAL APPROACH
6.1 Previous IM efforts (Challenges & Progress vs. Previously approved POA&M)
6.2 Future IM Efforts (Funded vs. Unfunded)
6.3 Technology Requirements
7. SCHEDULE

7.1 Milestone/Program Status (to include: IM Improvement Schedule and Projected Insertion Opportunities)

8. FUNDING ACROSS THE FYDP

8.1 Insensitive Munitions (Development, Integration, Testing, Qualification) and Procurement Funding

8.2 Unfunded Requirements

9. BUYS / PROCUREMENTS

9.1 Procurement Quantities

10. IMPACT

10.1 Consequence of Reaction

10.2 Operational Benefits and/or Limitations

10.3 Logistical Benefits and/or Limitations

10.4 Cost Benefits or Penalties

PEO ABC MUNITIONS PORTFOLIO			
Munitions	Response	Notes	
		Paragraph	Appendix
Items in Portfolio	XXX	5.3	B
Planned Items in Procurement Across FYDP	XXX	5.4	B
Items in Procurement for Current Period	XXX	5.5	B
Items in Development	XX	5.6	B
Items IM-Compliant (how many items total)	XXX	5.7	B
Items with JROC–Approved Waivers	XXX	5.8	A - Refs (h), (n)
Items Obtaining IM Compliance This Period (from this year to the previous year)	XX	5.9	A - Refs (j), (k), (l)
Items with Incremental IM Improvements	X	5.10	
Items Requiring an IM Waiver	XXX	5.11	B
Tier I Munitions (Priority) Funded	XX	5.12	B, F
Tier II Munitions (Priority) Not Fully Funded	X	5.13	B
Tier III Munitions (SMCA or Other Service Procured)	XXX	5.14	B
Tier IV Munitions (Legacy)	X	5.15	B
Tier V Munitions (Exempt)	X	5.16	B
Tier VI Munitions (IM compliant, other PEO/Agency is buying)	XXX	5.17	B
Tier VII Munitions (IM compliant, PM is buying)	XX	5.18	B
Total Obligation Authority (TOA) (Munitions Only) PEO R&D and Procurement	$0	5.19	B
Funded IM Investment ($M)	$0	5.20	
Unfunded IM Investment ($M)	$0	5.21	
Joint IM Investments (Multi-Service Organization)	$0	5.22	
Notes:			

IM Reactions

1. In an effort to clearly articulate to senior leadership the payoff from the IM investment that DoD is making in priority munitions programs, it is recommended that PEOs generate a common table that shows how the IM response of specific munitions will mature and when the munitions will be available for production or procurement. The template provided at Table 1 is required to be submitted for Priority munitions. The table incorporates a stoplight matrix for all munitions in the portfolio that addresses Baseline/Current Status of IM performance (known or predicted for the IM threats per MIL-STD 2105C and the hazard classification (HC) assigned (interim or final). In addition, the activity that scored the IM reactions must be identified. The stoplight matrix also includes intermediate (Future) reactions that address the reaction that is anticipated to be achieved based on current technology advancement and includes the year that the IM improvement is expected to be available. The available (Avail) column is intended to identify when the emerging technology is expected to be mature for insertion.

IM Maturation Based on Funded PEO Tier I Programs																		
Baseline IM Response								Projected IM Response										
Baseline Munition	FCO	SCO	BI	FI	SD	SCJ	H-C	POA&M Munition Program	FCO	SCO	BI	FI	SD	SCJ	Proj. H-C	FY	Total Remaining IM Investment ($M)
Munition XYZ Example	IV	II	III	IV	F	(P)	1.1		V	(VI)	(V)	(V)	(P)	(P)	(1.2.3)	10	$17.65
	IV	II	III	IV	P	(P)	1.1		(IV)	(IV)	(IV)	(IV)	(P)	(P)	(1.2.1)	10	$6.50
	IV	II	III	III	(P)	(F)	1.1		(IV)	(III)	(IV)	(IV)	(P)	(F)	1.1	15	$0.75

DEFINITIONS

Baseline IM Response : The IM response of the munition at the start of the POA&M. In some cases this will be the response of a munition being replaced by a muntion being addressed in the POA&M. For a developmental item this could be either a munition being replaced, or upgraded, or the baseline could be not applicable (N/A) or TBD if this munition is providing a new capability and will not be eliminating another munition from procurement. The latter would apply if based on test or assessment or if a preliminary developmental munition design yielded a baseline IM response. Baseline responses for any munition can be assessed, but assessed values should be replaced if actual IM test results become available during execution of the POA&M.

Projected IM Response: The IM response of the munition at the completion of the POA&M. Relative to the baseline, this will show the incremental improvement of the munition response that is to be gained by the investment in the POA&M.

FY: The Fiscal Year when a munition with the projected IM response could potentially be procured for use.

Total Remaining IM Investment ($M): The total IM imvestment remaining across the POA&M. For a Tier I munition, the POA&M should be fully funded and at the end of the POA&M, the munition should be in a state that it would be qualified and could be procured and used. This should only include those costs that are actually incurred by IM; for example, if a munition is being modfied or qualified for purposes other than IM, those costs need not be addressed, although costs for IM qualification should always be included.

Table 1 – IM Maturation Based on Funded Tier I Programs

2. Table 2 reflects a legend that is to be used for the reporting of all IM reactions:

		Score		IM Test							Score		
Reaction	Response	Tested	Assessed	FCO	SCO	BI	FI		SD	SCJ	Tested	Assessed	Reaction
Type VI	No Reaction	VI	(VI)	Fast Cook Off	Slow Cook Off	Bullet Impact	Fragement Impact		Sympathetic Detonation	Shaped Charge Jet	P	(P)	Type VI
Type V	Burn	V	(V)										Type V
Type IV	Deflagration	IV	(IV)										Type IV
Type III	Explosion	III	(III)										Type III
Type II	Partial Detonation	II	(II)								F	(F)	Type II
Type I	Detonation	I	(I)										Type I

Table 2 – IM Response Reporting Legend

For clarification, the reactions listed in Table 2 are the only entries permitted, i.e., Roman Numerals for FCO, SCO, BI, and FI tests, “P” or “F” for SD and SCJ tests, parenthetical notation when reaction type is assessed, proper color coding. Do not enter the title of the reaction, or an abbreviation thereof, i.e., Type IV – Deflagration, or Defl., or create new colors to suit individual needs. Where a reaction type is projected to cross two different types, use the following example as guidance: IV/V; yellow transitioning to green may be used for the color coding. This is the only deviation to the protocol that will be permitted.

Funding

1. Template for reporting IM funding/Investments:

Tier I Munitions Insensitive Munitions (IM) and Investment Funding ($K)							
Funding	FY07	FY08	FY09	FY10	FY11	FY12	FY13
Munition/Special Interest Programs							
Total							

2. Template for reporting unfunded requirements

Tier II Munitions Insensitive Munitions (IM) and Investment Funding ($K)							
Funding	FY07	FY08	FY09	FY10	FY11	FY12	FY13
Munition/Special Interest Programs							
Total							

3. Template for accessing the cost and impact of IM investment Funding and Associated Cost by Munition Program

Munition Program - (Reported By Munition) IM Investment Funding and Associated Cost							
Associated Funding Requirements	FY07	FY08	FY09	FY10	FY11	FY12	FY13
"Include additional funding streams as appropriate"							
Hardware (Assets)							
Technology Development							
Engineering Assessment							
Qualification Testing							
Requalification Testing							
Total							

Attachment

Considerations for Determining IM Investment for Insensitive Munitions Strategic Planning (IMSP), and Plan of Action and Milestones (POA&M) Development

Reference: (a) OSD (AT&L) Memorandum dated MAR 19 2007 (Subject: Insensitive Munitions Strategic Planning)

1. During the 10-12 September 2007 meeting of the Joint Services Insensitive Munitions Panel (JSIMTP), several discussions took place regarding the reporting of IM investment data. In particular, there were discussions regarding how to report IM investments when they are made as part of an integrated development program. It became clear that additional clarification/guidance was required.

2. The JSIMTP and the DoD IM IPT provide technical and programmatic oversight of the IM programs being executed by the PEOs and PMs and subsequently reported in their biennial IM Strategic Plans. While not directing how the investments are made, these bodies are expected to conduct an informed and detailed review of the plans and POA&Ms, and report their findings to the JROC and OSD. In order to conduct these reviews in an efficient and effective manner, we have established business rules that direct the PEOs and PMs on how certain technical and programmatic data should be presented. These rules allow for easier review and analysis of the information and ease the burden of rolling up the data for reporting to senior leadership. With this in mind, we offer this clarification in order to assist during the preparation of IM Strategic Plans and POA&Ms. Though IM efforts may be part of an integrated development program, we are requesting that a break-out of funding identifying IM investments be made. It is understood that this may create some level of uncertainty; we trust that the PEOs/PMs are in the best position to make the most accurate break-out of IM investments. Once this task has been completed, the program can then report the investments as shown in tables 8.1 and 8.2 (fully funded efforts) or Tables 8.1, 8.2 and/or 8.3 (unfunded or partially funded). Once each task is known by FY, the program can begin to categorize the efforts based on the funding streams shown in Table 8.2.

3. The attachment to reference (a), provides the format for preparing the Plan of Action & Milestones (POA&M) for each Tier I and Tier II program. That format included templates for reporting the IM funding/investments and Unfunded Requirements (UFR) to be included in Section 8 of POA&Ms. Though not provided as a "Template Table", reference (a) requires the POA&M to address procurement funding.

4. Any funding presented in the IMSP or POAM should be defendable and contain justification within subsequent paragraphs with appropriate reference to source and/or rationale. No number should be expected to stand alone.

- **<u>Munitions Program IM Investment/Funding (Table 8.1)</u>**: This table displays the total funding currently budgeted to conduct IM design and testing and, on a separate line within the same table, the procurement funding across the Future Years Defense Program (FYDP). The procurement funding line should always match the Service(s) budget submission for the FYDP being addressed in the IMSP. The following table was formatted subsequent to the 10-12 September 2007 JSIMTP meeting for reporting required data and reflects an acceptable level of detail as identified by the JSIMTP.

"Munitions / Special Interest Programs" Insensitive Munitions (IM) Investment and Service Procurement Funding ($K)						
IM Investment Funding						
	FY08	FY09	FY10	FY11	FY12	FY13
IM Design and Testing						
Investment Subtotal						
Procurement Funding						
	FY08	FY09	FY10	FY11	FY12	FY13
Army						
Air Force						
Marine Corps						
Navy						
SOCOM						
Procurement Sub-Total						
Total	0	0	0	0	0	0

Table 8.1

- **<u>Cost and Impact of IM Investment Funding (Table 8.2)</u>:** This table provides a breakdown of the IM design and testing funding portion of Table 8.1. This is the logical place to identify the available funding. When doing so the program should identify what the available funding is actually being used for. The following is provided as a clarification:
  - Hardware (Assets): This should be the funding required to procure test assets, including any munitions required for IM testing and any expendable equipment required to conduct the test(s) such as steel plating, witness plates, and fuel. Operational assets that will not be consumed during the IM testing evolution(s) should not be included in the table.
  - Technology Development: This should be the funding required to develop new IM technology or to incorporate newly acquired IM technology into the munition. This should include the individual program funding provided to a common pool to develop technology that is being applied across several munition programs, if applicable.

- Engineering Assessment: This should be the funding required to conduct any IM engineering tests for the program, including evaluation of IM testing conducted on similar munitions for possible incorporation into the program.
- Qualification Testing: This should be the funding required to conduct both the formal baseline IM testing and all formal IM testing conducted on all subsequent changes to the munition(s). Any funding required for other-than-IM qualification testing, including Hazard Classification (HC) testing, should be captured separately as a subset to the IM testing.
- Requalification Testing: This should be the funding required to conduct any testing required to requalify the munitions for use. This includes all costs associated with the qualification of an energetic for use within DoD and for use within a specific munition.

The program should carefully analyze the above information as it is being developed and document how it was derived. The funding streams in Table 8.2 should be sub-categorized to reflect fidelity in the data or, as an alternative the program may summarize the information in a narrative form in a paragraph below Table 8.2. Once completed, the funding for each FY of the FYDP is entered into the first line ("IM Design and Testing") of Table 8.1. The program should also consider identifying the type of money be used (i.e, Procurement, O&M, RDT&E, etc.).

Munitions Program - (Reported By Munition) **IM Investment Funding and Associate Cost ($K)**						
Associated Funding Requirement	FY08	FY09	FY10	FY11	FY12	FY13
"Include additional funding streams as approriate"						
Hardware (Assets)						
Technology Development						
Engineering Assessment						
Qualification Testing						
Requalification Testing						
Total ($K)						

Table 8.2

- **Munitions Program Unfunded Requirement (Table 8.3):** This table displays the UFR by FY and should be supported by data and information at the same level reflected in Tables 8.1 and 8.2, above.

Tier II Munitions Insensitive Munitions (IM) and Investment Funding ($K)						
IM Investment Funding						
	FY08	FY09	FY10	FY11	FY12	FY13
IM Design and Testing						
Investment Subtotal						
Procurement Funding						
	FY08	FY09	FY10	FY11	FY12	FY13
Army						
Air Force						
Marine Corps						
Navy						
SOCOM						
Procurement Sub-Total						
Total	0	0	0	0	0	0

Table 8.3

- UFR (Table 8.3): In order to understand how this number was derived a new table (Table 8.4) should be generated. This table should be similar to Table 8.2 but should address the funding required to complete the IM effort vice the funding available to conduct the IM effort. Again, each UFR should include detailed explanations. Once Table 8.4 is completed the aggregate funding for each FY of the FYDP is entered into Table 8.3.
- When the available funding and UFR are known the program should revisit the schedule and address, in narrative form, which tasks on the schedule cannot be completed with the current level of funding, the strategy for addressing the UFR, and the impact on the program if additional funding is not provided.

JROC "Business Rules" for
Clarification of Tier Assignment
Insensitive Munitions Strategic Planning (IMSP), and
Plan of Action and Milestones (POA&M) Development

Reference: (a) OSD (AT&L) Memorandum dated MAR 19 2007 (Subject: Insensitive Munitions Strategic Planning)
(b) OSD (AT&L) Memorandum dated JUL 3 2001 (Subject: Insensitive Munitions Compliance for Small Arms Ammunition)
(c) OSD (AT&L) Memorandum dated 10 OCT 2003 (Subject: Insensitive Munitions (IM) Compliance for Cartridge Actuated Devices and Propellant Actuated Devices (CAD/PAD))

1. The attachment to reference (a) provides discussion and guidance for the ranking of munitions within a PEO's Munitions portfolio. During the 44th DoD IM IPT it was apparent that the criteria established for accounting for munitions in the Tiers were not being applied uniformly by the PEOs. The following information is provided for your consideration.

Priority Munitions: Each PEO is responsible for developing and documenting the criteria and process by which they prioritize all munitions and/or items within their IMSP with regards to obtaining IM compliance for that item. All items deemed as "priority munitions" shall be placed in either Tier I or Tier II. In addition, all items categorized as "developmental items" shall also be categorized as Tier I or Tier II priority munitions.

Developmental Items: As soon as a material solution containing energetics is selected to meet an established requirement the PEO managing that item shall include it in the list of priority items as a Tier I or Tier II item. The item shall remain a developmental item until it reaches Milestone "C", at which point the PEO may re-prioritize the item based on established criteria.

- **Clarification on Documenting Developmental Items:** It is recognized that developing a formal Plan of Action & Milestones (POA&M) on a new developmental item is not normally practical, depending of the level of maturity of the program. However, the planning process to incorporate IM technology into each item must begin early in the acquisition, including during Advanced Concept Technology Demonstration (ACTD)/Advanced Technology Development (ATD) and continue through System Development and Demonstration (SDD). An abbreviated POA&M or "slick sheet" is, therefore, acceptable in lieu of a formal POA&M. The slick sheet should consist of an Executive Summary and Quad Chart, as a minimum. The PEO is expected to mature the program documentation commensurate with the program maturity.

JROC "Business Rules" for
Clarification of Tier Assignment
Insensitive Munitions Strategic Planning (IMSP), and
Plan of Action and Milestones (POA&M) Development

Small Arms Ammunition: In keeping with the guidance contained within reference (b), Small Arms Ammunition currently under development and any developed in the future, with incendiary or high explosive projectiles shall continue to have their IM compliance determined on a case-by-case basis. For the purpose of tracking munitions programs and reporting IM investment, Small Arms ammunition (.50 Caliber and smaller) including shotgun shells without an Explosive Projectile and/or containing Incendiary shall be treated as a developmental/priority munitions programs until the program achieves Milestone C. Small Arms in this category will not be required to develop POA&Ms except under unique circumstances; however, a "slick sheet" should be developed at a minimum and while in development they should generally be assessed to pass applicable IM Tests. Notionally, these small arms ammunition items should be reported as Tier II.

Insensitive Munitions (IM) Compliance for Cartridge Actuated Devices and Propellant Actuated Devices (CAD/PAD): Per the guidance contained within reference (c), items in the CAD/PAD families currently under development, and any developed in the future shall continue to have their IM compliance determined on a case-by-case basis as a part of the CAD/PAD qualification and certification process. CADs/PADs in this category will not be required to develop POA&Ms except under unique circumstances; however, a "slick sheet" should be developed at a minimum and while in development they should be assessed based on applicable IM Tests reactions. Notionally, these CAD/PAD items in develop should be reported as Tier II.

Tier I Items: Items that are developmental and/or categorized as priority munitions utilizing the PEO's established and documented criteria and that have a fully funded POA&M should be placed in Tier I. **Note:** The term fully funded means that funds are available and/or there is a reasonable expectation that the required funding will become available to execute the program plan.

Tier II Items: Items that are developmental and/or categorized as priority munitions utilizing the PEO's established and documented criteria and do not have a fully funded/unfunded POA&M should be placed in Tier II. **Note:** The term unfunded indicates that requirements are identified but there is no expectation that the required funding will become available to execute the program plan without higher headquarters intervention.

- There should be discussion within the POA&M addressing to identify any unfunded requirements (UFR) and a statement as to whether or not a UFR exists.
- If a UFR exists it should be included within the POA&M and discussed in detail within the IMSP including actions taken and/or planned to secure necessary funding to permit execution of the POA&M.

- If a UFR does not exist it should be developed and included as supplemental data.
- Clarification on Tier II Items: If a PEO has exerted maximum effort seeking a solution to obtain IM compliance on a Tier I or II item and existing technology does not exist to make the item fully IM compliant, the respective Service IM Board should be consulted. If the Service IM Board concurs that spending additional funding on that item is not in the best interest of the PEO or the DoD at that time, the program should remain as a Tier II item with an unfunded POA&M. The POA&M should reflect the reason for the decision and document the Service Board's concurrence. The PEO shall review the technology during each IMSP submission cycle to evaluate new technology and annotate the POA&M accordingly.

Tier III Items: Non-IM compliant, non-priority items that are configuration managed and procured by another PEO. This includes items which are configuration managed and procured by the US Army Single Manager for Conventional Ammunition (SMCA), even if they are not being procured for use by the US Army.

Tier IV Items: Non-IM compliant, non-priority items that are being procured or are expected to be procured by the reporting PEO. This should include legacy items that have a likelihood of being placed on a production contract during the FYDP, even if they are not currently funded in the FYDP.

Tier V Items: Non-priority items that are not expected to be procured by the reporting PEO. However, if the reporting PEO expects that an opportunity will arise in the near-term to insert IM technology into an item it should be considered for placement in Tier IV instead of Tier V.

Tier VI Items: IM compliant, non-priority items that are configuration managed and procured by another PEO. This includes items which are configuration managed and procured by the US Army SMCA, even if they are not being procured for use by the US Army. (This is the IM complaint equivalent of Tier III items).

Tier VII Items: IM compliant, non-priority items that are being procured or are expected to be procured by the reporting PEO. This should include legacy items that have a likelihood of being placed on a production contract during the FYDP, even if they are not currently funded in the FYDP. (This is the IM complaint equivalent of Tier IV items).

JROC "Business Rules" for
Clarification on Insensitive Munitions (IM) Reactions
Insensitive Munitions Strategic Planning (IMSP), and
Plan of Action and Milestones (POA&M) Development

Reference: (a) OSD (AT&L) Memorandum dated MAR 19 2007 (Subject: Insensitive Munitions Strategic Planning)

1. During the 35th meeting of the Joint Services Insensitive Munitions Panel (JSIMTP), several discussions took place regarding the presentation of IM Reactions (Baseline and Future) and Hazard Classification predictions. As the Insensitive Munitions Strategic Planning (IMSP) process evolves it becomes apparent that additional clarifications of the "business rules" are necessary. The following clarification is provided for the data provided in the IM Reactions chart previously prescribed for use in the Plan of Actions and Milestones (POA&Ms).

Use of parentheses with reaction type: Reactions that have been formally tested to an approved test plan, using test procedures approved by the respective Service IM Board, and scored by that Board should not use parentheses. All other tests results, including those that were assessed based on an analogy to another program, should be shown in parenthesis.

Predicted IM reactions: These reactions should be predicted based on the Program's realistic expectations on what can be accomplished with available or expected technology insertion. It has been noted that many programs show all current reactions as all Type "I" and "Fails" and predict all future reactions as Type "V" and "Pass" with little or no supporting text in the POA&M on how that will be achieved. While it is recognized by all in the DoD IM community that the goal is to become fully IM compliant, the predicted IM reactions should reflect what is considered possible with the existing technology and funding. All predicted reactions should be assessed based on the IM reactions expected to be achieved by applying the IM Standard Test Criteria.

Predicted Hazard Classification: It has been noted that the approach to predicted hazard classification (HC) shown in the table is almost the exact opposite that of the predicted IM reaction. While many programs predict a change from all "red" to all "green" in the IM reaction the HC does not change. Recognizing that there are some differences in the IM testing and the HC testing it still seems logical that significant improvements in IM would result in at least some improvements in HC. Therefore, the program office is requested to carefully evaluate the improvements in both IM test reactions and HC.

Application of Joint IM Test Standards: It is the policy of the JROC to use the Joint IM Test Standards on all future formal IM testing by all Services and Agencies within the DoD. The exception to this policy is the near-term (less than 6 months) formal IM

testing that has already been approved by the Service IM Board based on a formal test plan that was approved prior to 1 October 2007. While additional IM tests may be conducted based on the Threat Hazard Assessment and/or other program or Service specific applications, testing to the Joint IM Test Standards is required. Note that this policy applies only to future formal IM testing. Retesting of formal IM Baseline tests is not required.

TB 700–2
NAVSEAINST 8020.8B
TO 11A-1-47
DLAR 8220.1

Joint Technical Bulletin

DEPARTMENT OF DEFENSE AMMUNITION AND EXPLOSIVES HAZARD CLASSIFICATION PROCEDURES

Headquarters
Departments of the Army, the Navy,
the Air Force,
and the Defense Logistics Agency
Washington, DC
5 January 1998

Unclassified

SUMMARY of CHANGE

TB 700–2/NAVSEAINST 8020.8B/TO 11A–1–47/DLAR 8220.1
DEPARTMENT OF DEFENSE AMMUNITION AND EXPLOSIVES HAZARD CLASSIFICATION PROCEDURES

This revision--

- Adds UN Test Series 1 through 7 protocol with flow chart. Selects U.S. tests from protocol. States policy to accept alternate UN tests (para 5-1).

- Provides more specific test requirements and pass/fail criteria organized by test, with diagrams (paras 5-2 thru 5-9).

- Adds flash point test for liquid explosives (para 5-9).

- Revises blast measurements procedures and interpretations (para 6-2).

- Revises fragment hazard assessment procedures (para 6-3).

- Incoporates the UN thermal hazards assessment procedures and criteria (para 6-4).

- Replaces Sample Summary Sheet and NATO Data Card (for ammunition) with sample DD forms (para 6-5c and figs 6-7 and 6-8).

- Identifies alternate hazard classification test (with restrictions) that have application for qualification, insensitive munitions, and system vulnerability (para 6-6).

- Provides new Service and DOE addresses for interim hazard classification responsibilities and actions (para 7-2).

- Adds DOT/UN Test Series 3 requirements. States policy that 70-card gap test (or ARDEC solid gun propellant shock sensitivity test) and cap test are required for interim HD 1.3 classification (para 7-3a).

- Gives procedures for obtaining international shipment of iterim hazard classified items with competent authority approval (para 7-3d).

- Revises responsibilities and procedures for managing the Joint Hazard Classification System (JHCS) (para 8-3).

- References the changes in DOT hazard classification procedures (para 8-4).

- Redefines JHCS data input and format (para 8-5).

Headquarters
Departments of the Army, the Navy,
the Air Force,
and the Defense Logistics Agency
Washington, DC
5 January 1998

*TB 700–2
NAVSEAINST 8020.8B
TO 11A–1–47
DLAR 8220.1

Joint Technical Bulletin

DEPARTMENT OF DEFENSE AMMUNITION AND EXPLOSIVES HAZARD CLASSIFICATION PROCEDURES

By Order of the Secretary of the Army:

DENNIS J. REIMER
General, United States Army
Chief of Staff

Official:

JOEL B. HUDSON
Administrative Assistant to the Secretary of the Army

By Order of the Secretary of the Navy:

GEORGE R. STERNER
Vice Admiral, United States Navy
Commander, Naval Sea Systems Command

By Order of the Secretary of the Air Force:

RONALD R. FOGLEMAN
General, United States Air Force
Chief of Staff

Official:

HENRY VICCELLIO, JR.
General, United States Air Force
Commander, AFMC

By Order of the Director, Defense Logistics Agency:

RAUL A. MARTINEZ
DASC Administrator

History. This is a complete revision of TB 700–2, NAVSEAINST 8020.8A, TO 11A-1-47, and DLAR 8220.1.

Summary. This publication sets forth detailed procedures for hazard classifying ammunition and explosives in accordance with Department of Transportation regulations, North Atlantic Treaty Organization guide lines, and United Nations recommendations.

Applicability. This TB applies to the Defense Logistics Agency, the Navy, the Air Force, the Active Army, the Army National Guard, the U.S. Army Reserve.

Proponent and exception authority. The proponent of this TB is the Chairman, Department Of Defense Explosives Safety Board, Room 856C, Hoffman Building 1, 2461 Eisenhower Avenue, Alexandria, VA 22331–0600, Phone: DSN 221–8624, Commercial: (703) 325–8624; Fax: (703) 325–6227.

Suggested Improvements. Users are invited to send comments, corrections, and suggested improvements directly to the Chairman, Department Of Defense Explosives Safety Board, Room 856C, Hoffman Building 1, 2461 Eisenhower Avenue, Alexandria, VA 22331–0600, Phone: DSN 221–8624, Commercial: (703) 325–8624; FAX: (703) 325–6227.

Distribution. To be distributed in accordance with initial distribution number (IDN) 343699 requirements for TB 700-2.

Contents (Listed by paragraph and page number)

Chapter 1
Introduction, *page 1*
Purpose ❗1–1, *page 1*
NATO Standardization Agreement (STANAG) ❗1–2, *page 1*
Use of the procedures ❗1–3, *page 1*
Application ❗1–4, *page 1*
Hazards not determined by these criteria ❗1–5, *page 1*
Predominant hazard ❗1–6, *page 1*
Samples for laboratory examination ❗1–7, *page 1*
Non-Class 1 and non-regulated articles ❗1–8, *page 1*
Transportation of unexploded ordnance (UXO) ❗1–9, *page 1*
Chapter 2
Glossary, *page 2*
AMMONIUM-NITRATE-fuel oil mixture (ANFO) ❗2–1, page 2
AMMUNITION ❗2–2, page 2
AMMUNITION, ILLUMINATING, with or without burster, expelling charge or propelling charge ❗2–3, page 2
AMMUNITION, INCENDIARY ❗2–4, page 2
AMMUNITION, PRACTICE ❗2–5, page 2
AMMUNITION, PROOF ❗2–6, page 2
AMMUNITION, SMOKE ❗2–7, page 2
AMMUNITION, TEAR-PRODUCING, with burster, expelling charge or propelling charge ❗2–8, page 2
AMMUNITION, TOXIC with burster, expelling charge or propelling charge ❗2–9, page 2
ARTICLE, EXPLOSIVE ❗2–10, page 2
ARTICLES, EXPLOSIVE, EXTREMELY INSENSITIVE (ARTICLES, EEI) ❗2–11, page 2
ARTICLES, PYROPHORIC ❗2–12, page 2
ARTICLES, PYROTECHNIC, for technical purposes ❗2–13, page 2
BLACK POWDER (GUNPOWDER) ❗2–14, page 2
BOMBS ❗2–15, page 2
BOOSTERS ❗2–16, page 2
BURNING REACTION ❗2–17, page 2
BURSTERS, EXPLOSIVE ❗2–18, page 2
CARTRIDGES, BLANK ❗2–19, page 3

*This publication supersedes TB 700–2, NAVSEAINST 8020.B, AF TO 11A–1–47, DLAR 8220.1, 5 December 1989.

CARTRIDGES, FLASH • 2–20, *page 3*
CARTRIDGES FOR WEAPONS • 2–21, *page 3*
CARTRIDGES FOR WEAPONS, INERT PROJECTILE • 2–22, *page 3*
CARTRIDGES, POWER DEVICE • 2–23, *page 3*
CARTRIDGES, SIGNAL • 2–24, *page 3*
CARTRIDGES, SMALL ARMS • 2–25, *page 3*
CASES, CARTRIDGE, EMPTY, WITH PRIMER • 2–26, *page 3*
CASES, COMBUSTIBLE, EMPTY, WITHOUT PRIMER • 2–27, *page 3*
CHARGES, BURSTING • 2–28, *page 3*
CHARGES, DEMOLITION • 2–29, *page 3*
CHARGES, DEPTH • 2–30, *page 3*
CHARGES, EXPELLING • 2–31, *page 3*
CHARGES, EXPLOSIVE, COMMERCIAL, without detonator • 2–32, *page 3*
CHARGES, PROPELLING • 2–33, *page 3*
CHARGES, PROPELLING FOR CANNON • 2–34, *page 3*
CHARGES, SHAPED, COMMERCIAL, without detonator • 2–35, *page 3*
CHARGES, SHAPED, FLEXIBLE, LINEAR • 2–36, *page 3*
CHARGES, SUPPLEMENTARY, EXPLOSIVE • 2–37, *page 3*
COMPATIBILITY • 2–38, *page 3*
COMPONENTS, EXPLOSIVE TRAIN, N.O.S. • 2–39, *page 3*
COMPOSITE PROPELLANT • 2–40, *page 3*
CONTRIVANCES, WATER-ACTIVATED, with burster, expelling charge or propelling charge • 2–41, *page 3*
CORD, DETONATING, flexible • 2–42, *page 3*
CORD (FUSE) DETONATING, metal clad • 2–43, *page 3*
CORD, IGNITER • 2–44, *page 4*
CUTTER, CABLE, EXPLOSIVE • 2–45, *page 4*
DEBRIS • 2–46, *page 4*
DEFLAGRATION REACTION • 2–47, *page 4*
DETONATION REACTION • 2–48, *page 4*
DETONATOR ASSEMBLIES, NON-ELECTRIC, for blasting • 2–49, *page 4*
DETONATORS • 2–50, *page 4*
DoD COMPONENT (DODC) • 2–51, *page 4*
DYNAMITE • 2–52, *page 4*
EFFECTIVE EXPLOSIVE WEIGHT (EEW) • 2–53, *page 4*
ENTIRE LOAD AND TOTAL CONTENTS • 2–54, *page 4*
EX NUMBER • 2–55, *page 4*
EXPLODE • 2–56, *page 4*
EXPLOSION REACTION • 2–57, *page 4*
EXPLOSION OF THE TOTAL CONTENTS • 2–58, *page 4*
EXPLOSIVE, BLASTING • 2–59, *page 4*
EXPLOSIVE, BLASTING, TYPE A • 2–60, *page 4*
EXPLOSIVE, BLASTING, TYPE B • 2–61, *page 4*
EXPLOSIVE, BLASTING, TYPE C • 2–62, *page 4*
EXPLOSIVE, BLASTING, TYPE D • 2–63, *page 4*
EXPLOSIVE, BLASTING, TYPE E • 2–64, *page 5*
EXPLOSIVE, DEFLAGRATING • 2–65, *page 5*
EXPLOSIVE, DETONATING • 2–66, *page 5*
EXPLOSIVE, EXTREMELY INSENSITIVE DETONATING SUBSTANCE (EIDS) • 2–67, *page 5*
EXPLOSIVE, PRIMARY • 2–68, *page 5*
EXPLOSIVE, SECONDARY • 2–69, *page 5*
FIREBRAND • 2–70, *page 5*
FIREWORKS • 2–71, *page 5*
FLARES • 2–72, *page 5*
FLASH POWDER • 2–73, *page 5*
FORBIDDEN EXPLOSIVE • 2–74, *page 5*
FRAGMENT • 2–75, *page 5*
FUSE/FUZE • 2–76, *page 5*
FUSE, IGNITER, tubular, metal clad • 2–77, *page 5*
FUSE INSTANTANEOUS, NON-DETONATING (QUICKMATCH) • 2–78, *page 5*
FUSE, SAFETY • 2–79, *page 5*
FUZES • 2–80, *page 5*
GRENADES, hand or rifle • 2–81, *page 5*
HAND-HELD SAFE • 2–82, *page 5*
HAZARDOUS FRAGMENT • 2–83, *page 5*
HAZARDOUS FRAGMENT DENSITY • 2–84, *page 5*
HIGH EXPLOSIVE WEIGHT • 2–85, *page 5*
IGNITERS • 2–86, *page 5*
IGNITION, means of • 2–87, *page 5*
INITIATION, means of • 2–88, *page 6*
LIGHTERS, FUSE • 2–89, *page 6*
MASS EXPLOSION • 2–90, *page 6*
MINES • 2–91, *page 6*
NET EXPLOSIVE WEIGHT (NEW) • 2–92, *page 6*
NET EXPLOSIVE WEIGHT FOR Q–D (NEWQD) • 2–93, *page 6*
NET PROPELLANT WEIGHT (NPW) • 2–94, *page 6*
NON-REGULATED ARTICLES • 2–95, *page 6*
POWDER CAKE (POWDER PASTE) WETTED • 2–96, *page 6*
POWDER, SMOKELESS • 2–97, *page 6*
PRIMERS, CAP TYPE • 2–98, *page 6*
PRIMERS, TUBULAR • 2–99, *page 6*
PROJECTILES • 2–100, *page 6*
PROPELLANTS • 2–101, *page 6*
PROPULSION • 2–102, *page 6*
QUANTITY DISTANCE (Q–D) • 2–103, *page 6*
RELEASE DEVICES, EXPLOSIVE • 2–104, *page 6*
ROCKET MOTORS • 2–105, *page 6*
ROCKETS • 2–106, *page 6*
SIGNALS • 2–107, *page 6*
SOUNDING DEVICES, EXPLOSIVE • 2–108, *page 6*
STERADIAN • 2–109, *page 6*
SUBSTANCE, EXPLOSIVE • 2–110, *page 7*
SUBSTANCE, PYROTECHNIC • 2–111, *page 7*
SUBSTANCES, EXPLOSIVE, VERY INSENSITIVE (SUBSTANCES, EVI) N.O.S. • 2–112, *page 7*
TORPEDOES • 2–113, *page 7*
TRACERS FOR AMMUNITION • 2–114, *page 7*
UNEXPLODED ORDNANCE (UXO) • 2–115, *page 7*
WARHEADS • 2–116, *page 7*
WITH MEANS OF INITIATION • 2–117, *page 7*
WITHOUT MEANS OF INITIATION • 2–118, *page 7*

Chapter 3
Administrative Procedures, *page 7*
Introduction • 3–1, *page 7*
Procedures • 3–2, *page 7*
Notification of classifications • 3–3, *page 9*

Chapter 4
Hazard Classification, *page 11*
Scope • 4–1, *page 11*
DOT hazard classes • 4–2, *page 11*
Hazard Class 1 assignment procedures • 4–3, *page 11*
Hazard Classes 2 through 9 assignment procedures • 4–4, *page 11*
Non-Class 1 and non-regulated • 4–5, *page 11*
Compatibility group assignment procedure • 4–6, *page 11*
Compatibility groups • 4–7, *page 11*
Assignment of DOT identification number (United Nations number) • 4–8, *page 12*
Explosive weights for Class 1 items • 4–9, *page 12*
Storage without interim hazard classification • 4–10, *page 12*

Chapter 5
Tests, *page 12*
Hazard classification test protocol • 5–1, *page 12*
UN Test Series 1 (optional) • 5–2, *page 13*
UN Test Series 2 (optional) • 5–3, *page 15*
Test Series 3 (mandatory) • 5–4, *page 15*
UN Test Series 4 (mandatory where appropriate) • 5–5, *page 17*

UN Test Series 5 (mandatory for Hazard Division 1.5) • 5–6, *page 18*
UN Test Series 6 (mandatory for Hazard Divisions 1.1, 1.2, 1.3 and 1.4) • 5–7, *page 19*
UN Test Series 7 (mandatory for Hazard Division 1.6) • 5–8, *page 21*
Additional test • 5–9, *page 24*

Chapter 6
Instrumentation, interpretation of results and alternate tests, *page 62*
Introduction • 6–1, *page 62*
Blast measurements • 6–2, *page 62*
Fragment hazard assessment • 6–3, *page 63*
Thermal effects assessment • 6–4, *page 64*
Interpretation of results • 6–5, *page 64*
Alternate tests • 6–6, *page 66*

Chapter 7
Interim hazard classification, *page 81*
General • 7–1, *page 81*
Authority • 7–2, *page 81*
Limitations • 7–3, *page 82*
Documentation • 7–4, *page 82*

Chapter 8
Joint hazard classification system, *page 83*
Introduction • 8–1, *page 83*
Background • 8–2, *page 83*
Responsibilities and procedures • 8–3, *page 83*
Department of Transportation (DOT) changes • 8–4, *page 83*
Completion of control record for JHCS revision • 8–5, *page 84*

Table List

Table 3–1: Methods for establishing final hazard classification, *page 8*
Table 4–1: DOT hazard classes designator, *page 11*
Table 4–2: DOT hazard class 1 divisions, *page 11*
Table 4–3: DOT Hazard class 2 thru 9 division, *page 11*
Table 6–2: Fragment data requirements, *page 64*
Table 6–1: Hemispherical TNT surface burst--peak pressure and positive impulse, *page 68*
Table 8–1: Joint Hazard Classification System control record, *page 83*
Table 8–2: JHCS control record data elements, *page 85*
Table 8–3: Department of Transportation (DOT) label codes, *page 89*
Table 8–4: Hazard symbol codes, *page 89*
Table 8–5: Department of Transportation (DOT) class codes, *page 89*
Table 8–6: Department of Transportation (DOT) shipping description codes, *page 90*

Figure List

Figure 3–1: Method for establishing final hazard classification., *page 10*
Figure 5–1: UN hazard classification procedures for articles and substances, *page 25*
Figure 5–1A: UN hazard classification procedures for articles. and substances (cont.), *page 26*
Figure 5–2: Gap test configuration for solid —UN Test 1(a) (iii), *page 27*
Figure 5–3: Gap test configuration for liquid substances—UN Test 1(a) (iii), *page 28*
Figure 5–4: Number eight (USA) detonator, *page 29*
Figure 5–5: Internal ignition test—UN Tests 1(b) (ii) and 2(b) (ii), *page 30*
Figure 5–6: Slow cookoff bomb test device—UN Tests 1(b) (iii) and 2(b) (iv), *page 31*
Figure 5–7: Gap test configuration for solid substances—UN Test 2(a) (iii), *page 32*
Figure 5–8: Cap test configuration for liquid substances—UN Test 2(a) (iii), *page 33*
Figure 5–9: Bureau of explosives impact machine—UN Test 3(a) (i), *page 34*
Figure 5–10: Bureau of explosives impact machine sample assembly for solid substances—UN Test 3(a) (i), *page 35*
Figure 5–11: Bureau of explosives impact machine sample assembly for liquid substances—UN Test 3(a) (i), *page 36*
Figure 5–12: ABL friction test configuration—UN Test 3(b) (iii), *page 37*
Figure 5–13: Termal stability test configuration—UN Test 3(c), *page 38*
Figure 5–14: Small-scale burning test configuration—UN Test 3 (d) (i), *page 39*
Figure 5–15: Termal stability test for articles—UN Test 4(a), *page 40*
Figure 5–16: Steel tube drop test for liquids—UN Test 4(b) (i), *page 41*
Figure 5–17: Twelve meter drop test configuration —UN Test 4(b) (ii), *page 42*
Figure 5–18: Cap sensitivity test configuration—UN Tests 5(a) and 7(a), *page 43*
Figure 5–19: Alternate cap sensitivity test configuration—UN Tests 5(a) and 7(a), *page 44*
Figure 5–20: Deflagration to detonation test configuration—UN Test 4(b) (ii), *page 45*
Figure 5–21: Typical wood fuel arrangement for external fire test for Hazard Division 1.5—UN Test 5(c), *page 46*
Figure 5–22: Prince incendiary spark test arrangement—UN Test 5(d), *page 47*
Figure 5–23: Single package test arrangement —UN Test 6(a), *page 48*
Figure 5–24: Typical stack test arrangement—UN Test 6(b), *page 49*
Figure 5–25: Typical wood fuel arrangement for external fire (bonfire) test—UN Test 6(c), *page 50*
Figure 5–26: EIDS gap test configuration—UN Test 7(b), *page 51*
Figure 5–27: Susan impact test arrangement—UN Test 7(c) (i), *page 52*
Figure 5–28: Susan projectile—UN Test 7(c) (i), *page 53*
Figure 5–29: Friability test configuration—UN Tests 7(c) (ii) and 7(d) (ii), *page 54*
Figure 5–30: Steel plate and recovery box setup for friability test—UN Tests 7(c) (ii) and 7(d) (ii), *page 55*
Figure 5–31: Closed vessel for friability test–UN Tests 7(c) (ii) and 7(d) (ii), *page 56*
Figure 5–32: Steel pipe used for EIDS bullet impact, EIDS external fire test and EIDS slow cookoff test—UN Tests 7(d) (i), 7(e), and 7(f), *page 57*
Figure 5–33: EIDS bullet impact test arrangement—UN Test 7(d) (i), *page 58*
Figure 5–34: EIDS slow cookoff test—UN Test 7(f) and 1.6 article slow cookoff test —UN Test 7(h), *page 59*
Figure 5–35: 1.6 multiple bullet impact test arrangement—UN Test 7(j), *page 60*
Figure 5–36: Tag closed vessel, *page 61*
Figure 6–1: Idea overpressure vs. time history, *page 69*
Figure 6–2: Hemispherical TNT surface burst—peak pressure and positive impulse, *page 70*
Figure 6–3: Velocity/density arena configuration—method 1, *page 71*
Figure 6–4: Fragmentation characterization arena—method 1, *page 72*

Contents—Continued

Figure 6–5: Fragment collection coordinate system—method 1, *page 73*
Figure 6–6: Fragment recovery areas for tests 6(b) and 6(c)—method 2, *page 74*
Figure 6–7: Sample substance data base recording form, *page 75*
Figure 6–7A: Sample substance data base recording form (cont.), *page 76*
Figure 6–8: Sample ammunition data base recording form, *page 77*
Figure 6–8A: Sample ammunition data base recording form (cont.), *page 78*
Figure 6–9: Solid rocket motor card gap test protocol, *page 79*
Figure 6–10: Super large-scale gap test configuration, *page 80*
Figure A: Title, *page 95*

Chapter 1
Introduction

1–1. Purpose

This publication sets forth procedures for determining the reaction of ammunition and explosives (as defined in DoD 6055.9–Standard (STD) (see App A, Ref 1) to specified initiating influences from tests. Based on reactions obtained, it further provides for assignment of appropriate hazard classifications for transportation and storage as specified in Chapter 4. It seeks to assure that under identical conditions, all DoD Components (DODCs) will use identical hazard classifications for ammunition and explosives items.

1–2. NATO Standardization Agreement (STANAG)

In the interest of safety and uniformity of hazard classification of ammunition and explosives, NATO STANAG No. 4123 (see App A, Ref 2) has been developed. The title of this STANAG is "Methods to Determine and Classify the Hazards of Ammunition and Explosives." The United States has ratified this STANAG and is implementing it in this document. Those portions of this document which are indicated as being required by the STANAG must be followed until changed or deleted by formal notification action by the United States to NATO authorities.

1–3. Use of the procedures

a. Procedures herein will be included in any test plan that is developed by the responsible DODC for a specific new item to be tested. They are to be considered as a minimum with regard to the type and number of tests. Additional tests, both in number and type, may be conducted as desired by the responsible DODC or as required to achieve mutual agreement among DODCs.

b. In order to best utilize limited resources and avoid test redundancy, hazard classification test plans should be tailored, to the maximum extent possible within the guidelines contained in this publication, so that tests for hazard classification, qualification, insensitive munitions, and system vulnerability can be organized into one coordinated test program with the minimum number of required assets and tests.

1–4. Application

This publication applies to ammunition and explosives in the condition and form that they are stored and offered for transportation. Usually, this means the packaged item. It will apply for the determination of hazard classifications that arise either from a modification to existing ammunition or its packaging or from the introduction of new ammunition or packaging. It is not intended that this publication will necessarily apply retroactively. However, the responsible DODC will indicate upon request whether or not the classification of a particular item has been determined according to this publication. Where it has not and there are doubts as to the validity of the classification, the responsible DODC will verify its original classification by means prescribed in this publication. Hazard classifications of record for which documentation of test results is not available, and when there is no reason to doubt the validity of the classification, may be submitted for approval according to paragraph 3–2.

1–5. Hazards not determined by these criteria

During the development of these procedures, all types of hazards were considered; however, tests are not included to specifically determine the following:

a. Hazards—

(1) During various stages of manufacture and assembly.

(2) From flight range of guided missiles or rockets.

(3) Associated with launching of a vehicle or tactical missile.

(4) Or associated with any other operations that are not transportation and storage.

b. Susceptibility to accidental initiation by—

(1) Electrostatic and electromagnetic influence.

(2) Rough handling and vibration.

(3) Effects of exposure to hot and cold environments.

(4) Mechanical defects.

(5) Solar radiation.

(6) Temperature shock.

(7) Abnormal functioning.

(8) Or combat exposure.

1–6. Predominant hazard

In the event the ammunition item to be classified contains a hazardous material such as: fuel, oxidizer or compressed gas which presents a greater hazard in transportation than the Class 1 material, then the protocol for the predominant hazard should be used rather than that for Class 1 materials. For instance, if a rocket contains gallons of flammable liquid and a small igniter, then the proper hazard classification may be Class 3, rather than Class 1. See Note in paragraph 3–1*a*.

1–7. Samples for laboratory examination

Transportation of explosives samples authorized in accordance with paragraph 173.56(d), of 49 CFR (see App A, Ref 3) which have not been subjected to tests required for interim hazard classification (para 7–3) are limited to 2.3 kg (5.0 lb) per shipment. The samples are shipped as Hazard Division 1.1 with an appropriate compatibility group specified.

1–8. Non-Class 1 and non-regulated articles

a. Class 1 comprises explosive articles, except devices considered to be "hand-held safe" (see chap 2) which contain explosive substances in such quantity or of such a character that their inadvertent or accidental ignition or initiation during transport shall not cause any effect external to the device either by projection, fire, smoke, heat or loud noise (taken from para 1.11, Chapter 1, of App A, Ref 4). Hand-held safe articles are identified as non-Class 1.

b. Non-Class 1 articles that do not contain any other classes of dangerous goods (Classes 2 through 9) as defined in 49 CFR Part 173, Subpart D (see App A, Ref 3) are identified as non-regulated. Non-Class 1 articles that do contain other classes of dangerous goods may be identified as non-regulated based on further evaluation (see App A, Ref 3).

1–9. Transportation of unexploded ordnance (UXO)

a. Ammunition and explosives are often discovered on current DoD installations, formerly used defense sites (FUDS) and other areas affected by DoD activities. DoD UXO found in such circumstances may be unknown or in a state of deterioration that identification by markings, nomenclature or other characteristics may be impossible. Even when identification is made, the original hazard classification no longer applies. There is a critical need in many cases to transport UXO over public transportation routes. Where possible, transport UXO by military vehicle using military personnel.

b. The following procedure is required:

(1) UXO must be examined by personnel qualified for Explosive Ordnance Disposal (EOD) before transporting it from the installation or FUDS. The EOD unit will attempt to identify the ordnance and affirm in writing that the material is safe for transport.

(2) All unidentified UXO shall be handled, transported and stored as Hazard Division 1.1 and appropriate compatibility group. UXO will be stored as unserviceable ammunition (DoD 6055.9– STD (see App A, Ref 1)).

(3) The cognizant DODC, with local EOD assistance, will determine the appropriate packaging, blocking and bracing, marking and labeling, and any special handling requirements for transporting UXO over public transportation routes. These procedures will include the amount of material to be shipped per vehicle and the assigned compatibility group. Documentation to this effect will accompany each shipment. DD Form 836 is also to accompany each shipment.

(4) When EOD personnel are not available throughout a clean-up operation, the delegation of authority by the DODC, or the assigned EOD unit, shall be documented.

(5) If the UXO must be transported by contract vehicle, in addition to the procedures above, the EOD personnel must affirm in writing that the UXO is not a forbidden explosive under paragraph 173.54 of 49 CFR (see App, Ref 3) A, based on standardized EOD evaluation procedures.

(6) Transportation of UXO described in paragraph 1–9 will be accompanied by EPA Form 8700–22 (8700–22A when necessary) prepared in accordance with 40 CFR paragraph 262.20 (App A, Ref 5). Also, see 49 CFR, paragraph 172.205 (App A, Ref 3).

(7) These requirements do not pertain to the emergency response mission of EOD units, nor to the handling of nuclear, biological or toxic chemical agents. These must be considered on a case-by-case basis.

Chapter 2
Glossary

2–1. AMMONIUM-NITRATE-fuel oil mixture (ANFO)
A blasting explosive containing no essential ingredients other than prilled ammonium nitrate and fuel oil.

2–2. AMMUNITION
Generic term related mainly to articles of military application consisting of all kinds of bombs, grenades, rockets, mines, projectiles and other similar devices or contrivances.

2–3. AMMUNITION, ILLUMINATING, with or without burster, expelling charge or propelling charge
Ammunition designed to produce a single source of intense light for lighting up an area. The term includes illuminating cartridges, grenades and projectiles; and illuminating and target identification bombs. The term excludes the following articles which are listed separately: CARTRIDGES; SIGNAL; SIGNAL DEVICES; HAND SIGNALS; DISTRESS FLARES; AERIAL AND FLARES; SURFACE.

2–4. AMMUNITION, INCENDIARY
Ammunition containing incendiary substance which may be a solid, liquid or gel including white phosphorus. Except when the composition is an explosive per se, it also contains one or more of the following: a propelling charge with primer and igniter charge; a fuze with burster or expelling charge. The term includes—

a. AMMUNITION, INCENDIARY, liquid or gel, with burster, expelling charge or propelling charge.

b. AMMUNITION, INCENDIARY, with or without burster, expelling charge or propelling charge.

c. AMMUNITION, INCENDIARY, WHITE PHOSPHORUS, with burster, expelling charge or propelling charge.

2–5. AMMUNITION, PRACTICE
Ammunition without a main bursting charge, containing a burster or expelling charge. Normally it also contains a fuze and a propelling charge. The term excludes the following article which is listed separately: GRENADES, PRACTICE.

2–6. AMMUNITION, PROOF
Ammunition containing pyrotechnic substances, used to test the performance or strength of new ammunition, weapon component or assemblies.

2–7. AMMUNITION, SMOKE
Ammunition containing smoke-producing substance such as chlorosulphonic acid mixture (CSAM), titanium tetrachloride (FM), white phosphorus or smoke-producing pyrotechnic composition based on hexachloroethane (HC) or red phosphorus. Except when the substance is an explosive per se, the ammunition also contains one or more of the following: a propelling charge with primer and igniter charge, or a fuze with burster or expelling charge. The term includes—

a. AMMUNITION, SMOKE, with or without burster, expelling charge or propelling charge.

b. AMMUNITION, SMOKE, WHITE PHOSPHORUS, with burster, expelling charge or propelling charge.

2–8. AMMUNITION, TEAR-PRODUCING, with burster, expelling charge or propelling charge
Ammunition containing tear-producing substance. It also contains one or more of the following: a pyrotechnic substance; a propelling charge with primer and igniter charge; a fuze with burster or expelling charge.

2–9. AMMUNITION, TOXIC with burster, expelling charge or propelling charge
Ammunition containing toxic agent. It also contains one or more of the following: a pyrotechnic substance; a propelling charge with primer and igniter charge; a fuze with burster or expelling charge.

2–10. ARTICLE, EXPLOSIVE
An article containing one or more explosive substances.

2–11. ARTICLES, EXPLOSIVE, EXTREMELY INSENSITIVE (ARTICLES, EEI)
Articles that contain only extremely insensitive detonating substances and which demonstrate a negligible probability of accidental initiation or propagation (under normal conditions of transport) and which have passed Test Series 7.

2–12. ARTICLES, PYROPHORIC
Articles which contain a pyrophoric substance (capable of spontaneous ignition when exposed to air) and an explosive substance or component. The term excludes articles containing white phosphorus.

2–13. ARTICLES, PYROTECHNIC, for technical purposes
Articles which contain pyrotechnic substances and are used for technical purposes such as heat generation, gas generation, theatrical effects, etc. The term excludes the following articles which are listed separately: all ammunition; CARTRIDGES, SIGNAL, CUTTERS, CABLE, EXPLOSIVE, FIREWORKS, FLARES, AERIAL, FLARES, SURFACE, RELEASE DEVICES, EXPLOSIVE, RIVETS EXPLOSIVE, SIGNAL DEVICES, HAND, SIGNALS, DISTRESS, SIGNALS, RAILWAY TRACK, EXPLOSIVE SIGNALS, SMOKE.

2–14. BLACK POWDER (GUNPOWDER)
Substance consisting of an intimate mixture of charcoal or other carbon and either potassium nitrate or sodium nitrate, with or without sulphur. It may be meal, granular, compressed or pelletized.

2–15. BOMBS
Explosive articles which are dropped from aircraft. They may contain a flammable liquid with bursting charge, a photo-flash composition or a bursting charge. The term excludes torpedoes (aerial) and includes BOMBS, PHOTO-FLASH; BOMBS with bursting charge; BOMBS WITH FLAMMABLE LIQUID, with bursting charge.

2–16. BOOSTERS
Articles consisting of a charge of detonating explosive without means of initiation. They are used to increase the initiating power of detonators or detonating cord.

2–17. BURNING REACTION
The energetic material ignites and burns, non-propulsively. The case may rupture nonviolently, allowing mild release of combustion gases. Debris stays mainly within the area of the fire. The debris is not expected to cause fatal wounds to personnel or be a hazardous fragment beyond 15 m (49 ft).

2–18. BURSTERS, EXPLOSIVE
Articles consisting of a small charge of explosive used to open projectiles, or other ammunition in order to disperse their contents.

2–19. CARTRIDGES, BLANK
Articles which consist of a cartridge case with a center or rim fire primer and a confined charge of smokeless or black powder, but no projectile. Used for training, saluting or in starter pistols, etc.

2–20. CARTRIDGES, FLASH
Articles consisting of a casing, a primer and flash powder, all assembled in one piece ready for firing.

2–21. CARTRIDGES FOR WEAPONS
a. Fixed (assembled) or semi-fixed (partially assembled) ammunition designed to be fired from weapons. Each cartridge includes all the components necessary to function the weapon once. The name and description should be used for military small arms cartridges that cannot be described as "cartridges, small arms." Separate loading ammunition is included under this name and description when the propelling charge and projectiles are packed together (see also CARTRIDGES, BLANK).
b. Incendiary, smoke, toxic and tear-producing cartridges are described in this glossary under AMMUNITION, INCENDIARY, etc.

2–22. CARTRIDGES FOR WEAPONS, INERT PROJECTILE
Ammunition consisting of a projectile without bursting charge but with a propelling charge. The presence of a tracer can be disregarded for classification purposes provided that the predominant hazard is that of the propelling charge.

2–23. CARTRIDGES, POWER DEVICE
Articles designed to accomplish mechanical actions. They consist of a casing with a charge of deflagrating explosive and a means of ignition. The gaseous products of the deflagration produce inflation, linear or rotary motion or activate diaphragms, valves or switches or project fastening devices or extinguishing agents.

2–24. CARTRIDGES, SIGNAL
Articles designed to fire colored flares or other signals from signal pistols, etc.

2–25. CARTRIDGES, SMALL ARMS
Ammunition consisting of a cartridge case fitted with a center or rim fire primer and containing both a propelling charge and solid projectile(s). They are designed to be fired in weapons of caliber not larger than 19.1 mm (0.750 in). Shotgun cartridges of any caliber are included in this description. The term excludes: CARTRIDGES, SMALL ARMS, BLANK; and some military small arms cartridges termed CARTRIDGES FOR WEAPONS, INERT PROJECTILE.
Note: CARTRIDGES, SMALL ARMS which satisfy the provisions of 49 CFR 173.56(h) (see App A, Ref 3) may be assigned Hazard Classification 1.4S by the DODC Hazard Classifier. See NOTE to paragraph 3–2*b*(4).

2–26. CASES, CARTRIDGE, EMPTY, WITH PRIMER
Articles consisting of a cartridge case made from metal, plastics or other non-flammable material, in which the only explosive component is the primer.

2–27. CASES, COMBUSTIBLE, EMPTY, WITHOUT PRIMER
Articles consisting of cartridge cases made partly or entirely from nitrocellulose.

2–28. CHARGES, BURSTING
Articles consisting of a charge of detonating explosive such as RDX, Comp B, hexolite, octolite or plastic-bonded explosive designed to produce effect by blast or fragmentation.

2–29. CHARGES, DEMOLITION
Articles containing a charge of a detonating explosive in a casing of fiberboard, plastics, metal or other material. The term excludes the following articles which are listed separately: bombs, mines, etc.

2–30. CHARGES, DEPTH
Articles consisting of a charge of detonating explosive contained in a drum or projectile. They are designed to detonate under water.

2–31. CHARGES, EXPELLING
A charge of deflagrating explosive designed to eject the payload from the parent articles without damage.

2–32. CHARGES, EXPLOSIVE, COMMERCIAL, without detonator
Articles consisting of a charge of detonating explosive without means of initiation, used for explosive welding, jointing, forming and other metallurgical processes.

2–33. CHARGES, PROPELLING
Articles consisting of a propellant charge in any physical form, with or without a casing, for use in cannon or as a component of rocket motors.

2–34. CHARGES, PROPELLING FOR CANNON
Articles consisting of a propellant charge in any physical form, with or without casing, for use in a cannon.

2–35. CHARGES, SHAPED, COMMERCIAL, without detonator
Articles consisting of a casing containing a charge of detonating explosive with a cavity lined with rigid material, without means of initiation. They are designed to produce a powerful, penetrating jet effect.

2–36. CHARGES, SHAPED, FLEXIBLE, LINEAR
Articles consisting of a V-shaped core of a detonating explosive clad by a flexible metal sheath.

2–37. CHARGES, SUPPLEMENTARY, EXPLOSIVE
Articles consisting of a small removable booster in the cavity of a projectile between the fuze and the bursting charge.

2–38. COMPATIBILITY
Ammunition or explosives are considered compatible if they may be stored or transported together without significantly increasing either the probability of an accident or, for a given quantity, the magnitude of the effects of such an accident.

2–39. COMPONENTS, EXPLOSIVE TRAIN, N.O.S.
Articles containing an explosive designed to transmit the detonation or deflagration within an explosive train.

2–40. COMPOSITE PROPELLANT
A composite propellant, also known as a "fuel-oxidizer type propellant," consists of a finely ground oxidizer (such as an inorganic perchlorate or nitrate) in a matrix of plastic, resinous, or elastomeric material that serves as a fuel. Often other additives are included to assist in grain fabrication or curing, or as burning rate modifiers.

2–41. CONTRIVANCES, WATER-ACTIVATED, with burster, expelling charge or propelling charge
Articles whose functioning depends upon physico-chemical reaction of their contents with water.

2–42. CORD, DETONATING, flexible
Articles consisting of a core of detonating explosive enclosed in spun fabric, with plastics or other covering unless the spun fabric is sift-proof; that is, the spun fabric does not allow the explosive to sift out of the sheath.

2–43. CORD (FUSE) DETONATING, metal clad
Article consisting of a core of detonating explosive clad by a soft metal tube with or without protective covering. When the core contains a sufficiently small quantity of explosive, the words "MILD EFFECT" are added.

2–44. CORD, IGNITER

An article consisting of textile yarns covered with black powder or another fast-burning pyrotechnic composition and a flexible protective covering; or it consists of a core of black powder surrounded by a flexible woven fabric. It burns progressively along its length with an external flame and is used to transmit ignition from a device to a charge or primer.

2–45. CUTTER, CABLE, EXPLOSIVE

Articles consisting of a knife-edged device which is driven by a small charge of deflagrating explosive into an anvil.

2–46. DEBRIS

Any portion of the natural ground or of a structure (rocks, structural materials, fittings, equipment, barricade materials, etc.) which is propelled from the site of an explosion.

2–47. DEFLAGRATION REACTION

a. A chemical reaction proceeding at subsonic velocity along the surface of and/or through an explosive, producing hot gases at high pressures.

b. Ignition and burning of the confined energetic materials leads to nonviolent pressure release as a result of a low strength case of venting through case closures (leading post, fuze wells, etc.). The case might rupture but does not fragment; closure covers might be expelled, and unburned or burning energetic material might be thrown about and spread the fire. Propulsion might launch an unsecured test item, causing an additional hazard. No blast or significant fragmentation damage to the surroundings; only heat and smoke damage from the burning energetic material.

2–48. DETONATION REACTION

The most violent type of explosive event. A supersonic decomposition reaction (detonation) propagates through the energetic material to produce an intense shock in the surrounding medium (e.g., air or water) and very rapid plastic deformation of metallic cases followed by extensive fragmentation. All energetic material will be consumed. The effects will include large ground craters for items on or close to the ground, holing/plastic flow damage/fragmentation of adjacent metal plates, and blast overpressure damage to nearby structures.

2–49. DETONATOR ASSEMBLIES, NON-ELECTRIC, for blasting

Non-electric detonators assembled with and activated by such means as safety fuze, shock tube, flash tube or detonating cord. They may be of instantaneous design or incorporate delay elements. Detonating relays, incorporating detonating cord are included. Other detonating relays are included in "Detonators, non-electric."

2–50. DETONATORS

Articles consisting of a small metal or plastic tube containing explosives such as lead azide, PETN or combinations of explosives. They are designed to start a detonating train. They may be constructed to detonate instantaneously, or may contain a delay element. The term includes: DETONATORS for AMMUNITION and DETONATORS for BLASTING, both ELECTRIC and NON-ELECTRIC. Detonating relays without flexible detonating cords are included.

2–51. DoD COMPONENT (DODC)

A DoD department or agency.

2–52. DYNAMITE

A detonating explosive containing a liquid explosive ingredient (generally nitroglycerin, similar organic nitrate esters, or both) that is uniformly mixed with an absorbent material, such as wood pulp, and usually contains materials such as nitrocellulose, sodium and ammonium nitrates.

2–53. EFFECTIVE EXPLOSIVE WEIGHT (EEW)

See paragraph 6–2*f*.

2–54. ENTIRE LOAD AND TOTAL CONTENTS

The phrases "entire load" and "total contents" mean such a substantial proportion that the practical hazard should be assessed by assuming simultaneous explosion of the whole of the explosive content of the load or package.

2–55. EX NUMBER

A number, preceded by the prefix EX-, which is assigned by the Associate Administrator for Hazardous Materials Safety to identify an explosive which has been approved. See 49 CFR 173.56 (App A, Ref 3).

2–56. EXPLODE

The verb used to indicate those explosive effects capable of endangering life and property through blast, heat and projection of missiles. It encompasses both deflagration and detonation.

2–57. EXPLOSION REACTION

Ignition and rapid burning of the confined energetic material builds up high local pressures leading to violent pressure rupturing of the confining structure. Metal cases are fragmented (brittle fracture) into large pieces that are often thrown long distances. Unreacted and/or burning energetic material is also thrown about. Fire and smoke hazards will exist. Air shocks are produced that can cause damage to nearby structures. The blast and high velocity fragments can cause minor ground craters and damage (breakup, tearing, gouging) to adjacent metal plates. Blast pressures are lower than for a detonation reaction.

2–58. EXPLOSION OF THE TOTAL CONTENTS

The phrase "explosion of the total contents" is used in testing a single article or package or small stack of articles or packages. See definition of ENTIRE LOAD AND TOTAL CONTENTS.

2–59. EXPLOSIVE, BLASTING

Detonating explosive substances used in mining, construction and similar tasks. Blasting explosives are assigned to one of five types. In addition to the ingredients listed, blasting explosives may also contain inert components such as kieselguhr, and minor ingredients such as coloring agents and stabilizers.

2–60. EXPLOSIVE, BLASTING, TYPE A

Substance consisting of liquid organic nitrates such as nitroglycerin or a mixture of such ingredients with one or more of the following: nitrocellulose; ammonium nitrate or other inorganic nitrates; aromatic nitro-derivates, or combustible materials, such as wood-meal and aluminum powder. Such explosives must be in powdery, gelatinous or elastic form. The term includes dynamite, gelatine, blasting and gelatine dynamites.

2–61. EXPLOSIVE, BLASTING, TYPE B

Substances consisting of—

a. A mixture of ammonium nitrate or other inorganic nitrates with an explosive such as trinitrotuluene, with or without other substances such as wood-meal and aluminum powder, or

b. A mixture of ammonium nitrate or other inorganic nitrates with other combustible substances which are not explosive ingredients. Such explosives must not contain nitroglycerin, similar liquid organic nitrates or chlorates.

2–62. EXPLOSIVE, BLASTING, TYPE C

Substances consisting of a mixture of either potassium or sodium chlorate or potassium, sodium or ammonium perchlorate with organic nitro-derivates or combustible materials such as wood-meal or aluminum powder or a hydrocarbon. Such explosives must not contain nitroglycerin or similar liquid organic nitrates.

2–63. EXPLOSIVE, BLASTING, TYPE D

Substances consisting of a mixture of organic nitrated compounds

and combustible materials such as hydrocarbons and aluminium powder. Such explosives must not contain nitroglycerin, similar liquid organic nitrates, chlorates or ammonium nitrate. The term generally includes plastic explosives.

2–64. EXPLOSIVE, BLASTING, TYPE E

Substances consisting of water as an essential ingredient and high proportions of ammonium nitrate or other oxidizers, some or all of which are in solution. The other constituents may include nitro-derivates such as trinitrotoluene, hydrocarbons or aluminium powder. The term includes: explosives, emulsion; explosives, slurry and explosives, watergel.

2–65. EXPLOSIVE, DEFLAGRATING

A substance, e.g., propellant, which reacts by deflagration rather than detonation when ignited and used in its normal manner.

2–66. EXPLOSIVE, DETONATING

A substance which reacts by detonation rather than deflagration when initiated and used in its normal manner.

2–67. EXPLOSIVE, EXTREMELY INSENSITIVE DETONATING SUBSTANCE (EIDS)

A substance which, although capable of sustaining a detonation, has demonstrated through tests that it is so insensitive that there is very little probability of accidental initiation.

2–68. EXPLOSIVE, PRIMARY

Explosive substance manufactured with a view to producing a practical effect by explosion which is very sensitive to heat, impact or friction and which, even in very small quantities either detonates or burns very rapidly. It is able to transmit detonation (in the case of initiating explosive) or deflagration to secondary explosives close to it. Examples of primary explosives are mercury fulminate, lead azide and lead styphnate.

2–69. EXPLOSIVE, SECONDARY

Explosive substance which is relatively insensitive (when compared to primary explosives) which is usually initiated by primary explosives with or without the aid of boosters or supplementary charges. Such an explosive may react as a deflagrating or as a detonating explosive.

2–70. FIREBRAND

A projected burning or hot fragment (or debris) whose contained heat may be transferred to a receptor.

2–71. FIREWORKS

Pyrotechnic articles designed for entertainment.

2–72. FLARES

Articles containing pyrotechnic substances which are designed for use to illuminate, identify, signal or warn. The term includes: FLARES, AERIAL; FLARES, SURFACE.

2–73. FLASH POWDER

Pyrotechnic substance which, when ignited, produces an intense light.

2–74. FORBIDDEN EXPLOSIVE

Explosives unsuitable for transportation in accordance with 49 CFR (App A, Ref 3) "Transportation" because they are not properly classified by procedures in this manual (reference 173.56, 49 CFR (App A, Ref 3)) or present unacceptable hazards as specified in paragraph 173.21. Many forbidden explosives are listed in the third column of Table 172.101 of 49 CFR (App A, Ref 3).

2–75. FRAGMENT

Any complete ammunition item, subassembly, pieces thereof, or its packaging material which is propelled from the site of an explosion.

2–76. FUSE/FUZE

Although these two words have a common origin (French fusee, fusil) and are sometimes considered to be different spellings, it is useful to maintain the convention that fuse refers to a cord-like igniting device whereas fuze refers to a device used in ammunition which incorporates mechanical, electrical, chemical or hydrostatic components to initiate a train by deflagration or detonations.

2–77. FUSE, IGNITER, tubular, metal clad

Articles consisting of a metal tube with a core of deflagrating explosive.

2–78. FUSE INSTANTANEOUS, NON-DETONATING (QUICKMATCH)

Article consisting of cotton yarns impregnated with fine black powder (quickmatch). It burns with an external flame and is used in ignition trains for fireworks, etc.

2–79. FUSE, SAFETY

Article consisting of a core of fine grained black powder surrounded by a flexible woven fabric with one or more protective outer coverings. When ignited, it burns at a predetermined rate without any external explosive effect.

2–80. FUZES

Articles designed to start a detonation or a deflagration in ammunition. They incorporate mechanical, electrical, chemical or hydrostatic components and generally protective features. The term includes: FUZES, DETONATING; FUZES, DETONATING with protective features; FUZES, IGNITING.

2–81. GRENADES, hand or rifle

Articles which are designed to be thrown by hand or to be projected by a rifle.

a. The term includes:

(1) GRENADES, hand or rifle, with bursting charge.

(2) GRENADES, PRACTICE, hand or rifle.

b. The term excludes: grenades, smoke which are listed under AMMUNITION, SMOKE.

2–82. HAND-HELD SAFE

A non-Class 1 article (see para 1–8) which contains explosive substances in such quantity or of such a character that their inadvertent or accidental ignition or initiation during transport shall not cause any effect external to the device either by projection, fire, smoke, heat or loud noise (taken from paragraph 1.11 of Chapter 1 of the UN Recommendations on the Transport of Dangerous Goods (ST/SG/AC.10/1 Rev. 7 (App A, Ref 4)).

2–83. HAZARDOUS FRAGMENT

A fragment having an impact energy of 58 ft-lb or greater.

2–84. HAZARDOUS FRAGMENT DENSITY

The number of hazardous fragments per 600 ft^2.

2–85. HIGH EXPLOSIVE WEIGHT

See paragraph 4–9*a*.

2–86. IGNITERS

Articles containing one or more explosive substances used to start deflagration in an explosive train. They may be actuated chemically, electrically or mechanically. This term excludes the following articles which are listed separately: CORD, IGNITER; FUSE, IGNITER; FUSE, INSTANTANEOUS, NON-DETONATING; FUZES, IGNITING; LIGHTERS, FUSE; PRIMERS, CAP TYPE; PRIMERS, TUBULAR.

2–87. IGNITION, means of

A general term used in connection with the method employed to ignite a deflagration train of explosive of pyrotechnic substances

(for example: a primer for a propelling charge; an igniter for a rocket motor; an igniting fuze).

2–88. INITIATION, means of

a. A device intended to cause the detonation of an explosive (for example: detonator; detonator for ammunition; detonating fuze).

b. The term "with its own means of initiation" means that the contrivance has its normal initiating device assembled to it and this device is considered to present a significant risk during storage and transport but not one great enough to be unacceptable. The term does not apply, however, to a contrivance packed together with its means of initiation provided the device is packaged so as to eliminate the risk of causing detonation of the contrivance in the event of accidental functioning of the initiating device. The means of initiating can even be assembled to the contrivance provided there are protective features such that the device is very unlikely to cause detonation of the contrivance in conditions which are associated with transport.

c. For the purposes of classification any means of initiation without two effective protective features should be regarded as Compatibility Group B; an article with it own means of initiation, without two effective features, would be Compatibility Group F. On the other hand a means of initiation which itself possesses two effective protective features would be Compatibility Group D; and an article with a means of initiation which possesses two effective protective features would be Compatibility Group D or E. Means of initiation adjudged as having two effective protective features must be approved by the responsible DODC. A common and effective way of achieving the necessary degree of protection is to use a means of initiation which incorporates two or more independent safety features.

2–89. LIGHTERS, FUSE

Articles of various design actuated by friction, percussion or electricity and used to ignite safety fuse.

2–90. MASS EXPLOSION

Explosion which affects almost the entire load virtually instantaneously.

2–91. MINES

Articles consisting normally of metal or composition receptacles and a bursting charge. They are designed to be operated by the passage of ships, vehicles or personnel. The term includes "Bangalore torpedoes."

2–92. NET EXPLOSIVE WEIGHT (NEW)

See paragraph 4-9c.

2–93. NET EXPLOSIVE WEIGHT FOR Q–D (NEWQD)

See paragraphs 4–9d and 6–2f(8).

2–94. NET PROPELLANT WEIGHT (NPW)

See paragraph 4–9b.

2–95. NON-REGULATED ARTICLES

See paragraph 1–8.

2–96. POWDER CAKE (POWDER PASTE) WETTED

Substance consisting of nitrocellulose impregnated with not more than 60% of nitroclycerin or other liquid organic nitrates or a mixture of these.

2–97. POWDER, SMOKELESS

Substance based on nitrocellulose used as propellant. The term includes propellants with a single base (nitrocellulose (NC) alone)), those with a double base (such as NC and nitroglycerin (NG)) and those with a triple base (such as NC/NG/nitroguanidine). Cast, pressed or bag charges of smokeless powder are listed under "CHARGES, PROPELLING" or "CHARGES, PROPELLING FOR CANNON."

2–98. PRIMERS, CAP TYPE

Articles consisting of a metal or plastic cap containing a small amount of primary explosive mixture that is readily ignited by impact. They serve as igniting elements in small arms cartridges, and in percussion primers for propelling charges.

2–99. PRIMERS, TUBULAR

Articles consisting of a primer for ignition and an auxiliary charge of deflagrating explosive such as black powder used to ignite the propelling charge in a cartridge case for cannon, etc.

2–100. PROJECTILES

Articles such as a shell or bullet which are projected from a cannon or other artillery gun, rifle or other small arm. They may be inert, with or without tracer, or may contain a burster or expelling charge or a bursting charge. The term includes: PROJECTILES, inert, with tracer; PROJECTILES, with burster or expelling charge; PROJECTILES, with bursting charge.

2–101. PROPELLANTS

Deflagrating explosive used for propulsion.

2–102. PROPULSION

A reaction whereby adequate force is produced to impart flight to the test item.

2–103. QUANTITY DISTANCE (Q–D)

The quantity of explosive material and distance separation relationships that provide defined types of protection. These relationships are based on levels of risk considered acceptable for the stipulated exposures and are tabulated in the appropriate Q-D tables. See DoD 6055.9–STD (App A, Ref 1).

2–104. RELEASE DEVICES, EXPLOSIVE

Articles consisting of a small charge of explosive with means of initiation. They sever rods or links to release equipment quickly.

2–105. ROCKET MOTORS

Articles consisting of a solid, liquid or hypergolic fuel contained in a cylinder fitted with one or more nozzles. They are designed to propel a rocket or a guided missile. The term includes: ROCKET MOTORS; ROCKET MOTORS WITH HYPERGOLIC LIQUIDS, with or without expelling charge; ROCKET MOTORS, LIQUID FUELLED.

Note. This definition also applies to rocket motor shapes other than cylindrical, and to rocket motor sections that do not contain the nozzle(s).

2–106. ROCKETS

Articles consisting of a rocket motor and a payload which may be an explosive warhead or other device. The term includes: guided missiles and ROCKETS, LINE-THROWING; ROCKETS LIQUID FUELLED, with bursting charge; ROCKETS, with bursting charge; ROCKETS, with expelling charge; ROCKETS, with inert head.

2–107. SIGNALS

Articles containing pyrotechnic substances designed to produce signals by means of sound, flame or smoke or any combination thereof. The term includes: SIGNAL DEVICES, HAND; SIGNALS, DISTRESS, SHIP; SIGNALS, RAILWAY TRACK, EXPLOSIVE; SIGNALS, SMOKE.

2–108. SOUNDING DEVICES, EXPLOSIVE

Articles consisting of a charge of detonating explosive. They are dropped from ships and function when they reach a predetermined depth or the sea-bed.

2–109. STERADIAN

A unit of measure of solid angles that is expressed as the solid angle

subtended at the center of the sphere by a portion of the surface whose area is equal to the square of the radius of the sphere.

2–110. SUBSTANCE, EXPLOSIVE

A solid or liquid substance (or a mixture of substances) which is in itself capable by chemical reaction of producing gas at such a temperature and pressure and at such a speed as to cause damage to the surrounding. Pyrotechnic substances are included even when they do not evolve gas.

2–111. SUBSTANCE, PYROTECHNIC

A substance or a mixture of substances designed to produce an effect by heat, light, sound, gas or smoke or a combination of these as the result of non-detonative self-sustaining exothermic chemical reactions.

2–112. SUBSTANCES, EXPLOSIVE, VERY INSENSITIVE (SUBSTANCES, EVI) N.O.S.

Substances which present a mass explosion hazard but which are so insensitive that there is very little probability of initiation, or of transition from burning to detonation (under normal conditions of transport) and which have passed Test Series 5.

2–113. TORPEDOES

Articles containing an explosive or non-explosive propulsion system and designed to be propelled through water. They may contain an inert head or a warhead. The term includes: TORPEDOES, LIQUID FUELLED, with inert head; TORPEDOES, LIQUID FUELLED, with or without bursting charge; TORPEDOES, with bursting charge.

2–114. TRACERS FOR AMMUNITION

Sealed articles containing pyrotechnic substances designed to reveal the trajectory of a projectile.

2–115. UNEXPLODED ORDNANCE (UXO)

Explosive ordnance which has been primed, fuzed, armed, or otherwise prepared for action, and which has been fired, dropped, launched, projected, or placed in such a manner as to constitute a hazard, to operations, installations, personnel or material, and remains unexploded by malfunction, design, or for any other cause.

2–116. WARHEADS

Articles consisting of detonating explosives. They are designed to be fitted to a rocket, guided missile or torpedo. They may contain a burster or expelling charge or bursting charge. The term includes WARHEADS, ROCKET, with burster or expelling charge; WARHEADS, ROCKET with bursting charge; WARHEADS, TORPEDO, with bursting charge.

2–117. WITH MEANS OF INITIATION

The term "with (its own) means of initiation" means that an ammunition item or explosive article has its normal initiating device, such as a detonator or detonating fuze, assembled to it or packed with it, and this device is considered to present a significant risk during storage and transport, but not one great enough to be unacceptable.

2–118. WITHOUT MEANS OF INITIATION

The term "without (its own) means of initiation" means that an ammunition item or explosive article does not have its normal initiating device assembled to it or packed with it. The term also applies to ammunition or an article packed with its initiating device, provided the device is packed so as to eliminate the risk of causing detonation of the ammunition or article in the event of accidental functioning of the initiating device. In addition, the term applies to an ammunition item or explosive article assembled with its initiating device provided there are protective features such that the initiating device is very unlikely to cause detonation of the ammunition or article under conditions that are associated with storage and transport. For hazard classification purposes, a means of initiation that possesses two independent effective protective features is not considered to present a significant risk of causing the detonation of an ammunition item or explosive article under conditions associated with storage and transport.

Chapter 3
Administrative Procedures

3–1. Introduction

a. A final hazard classification forwarded through DoD channels for assignment of an EX number by the DOT is the ultimate approval for both domestic and international transportation and storage within a DODC. This chapter establishes procedures and responsibilities for processing information in support of Hazard Classification. NOTE: DOT EX-numbers are not required for non-Class 1 items. Therefore, if an ammunition item is established to be non-Class 1 based on predominant hazard (See para 1–6) then the Tri-Service coordinated DoD hazard classification procedure of this chapter are followed except that the hazard classification is not submitted to DOT. The hazard classification for non-Class 1 items must be assigned according to the properties of the predominant hazard in accordance with 49 CFR 173 (see App A, Ref 3).

b. As a minimum, all DoD ammunition and explosives (except for limited quantity laboratory samples specified in paragraph 1–7) destined for storage on a DoD installation or for transportation in the public domain must be assigned either a DoD storage hazard classification (for storage only; see para 4–10) or an interim hazard classification (for storage and transportation, see Chapter 7). The use of interim hazard classifications for overseas shipments is limited to military carriers. Otherwise, interim hazard classifications are to be used only for domestic transportation. When ammunition and explosives (without final DoD hazard classifications) require international shipment by commercial carrier, the criteria for obtaining an interim hazard classification must satisfied, the need for the international shipment must be justified, and a DOT Classification of Explosives with EX number assignment is required. The request for a DOT Classification of Explosives with EX number assignment is processed by the DODC, through the DDESB and Military Traffic Management Command (MTMC), to DOT.

c. The Department of Energy (DOE) is authorized by DOT in 49 CFR paragraph 173.56(b)(3) (see App A, Ref 3) to examine, classify and approve explosives in accordance with these hazard classification procedures. Interim hazard classification procedures for DOE are included in Chapter 7, as applicable. Final hazard classifications are submitted to DOT in accordance with applicable DOE orders and manuals.

3–2. Procedures

a. Prior to release of an ammunition item or assembly for operational service, the sponsoring organization must obtain a final hazard classification according to the procedures in Chapters 3 through 6. The organization sponsoring development of, or first adopting for use, an ammunition item or assembly is responsible for developing data to assign an appropriate hazard classification and for forwarding that data to the appropriate DODC Hazard Classifier listed in paragraph 3–3*a*.

b. There are four methods to support the final hazard classification for an item: Hazard classification by test; Hazard classification by analogy; Pre-1980 items; and Not new items. The correct method depends upon the specific history and characteristics of the item to be hazard classified. The forwarding correspondence should specify the method selected for obtaining hazard classification. The essential information required to support a hazard classification under each method is provided in the following paragraphs. A condensed information chart in Table 3–1 identifies the essential supporting data for each method.

Table 3–1
Methods for establishing final hazard classification

Supporting data	By tests	By analogy	Pre-1980 item	Not new item
1. TB 700–2 tests	X			
2. Technical data package	X	X	X	X
a. Chart of hazardous materials				
b. Drawings				
c. Packaging				
d. Functional narrative				
3. Comparison chart (old to new)		X		
4. Summary of tests of item doing analogy to		X		
5. Material release date			X	
6. Parent item in JHCS or final hazard classification				X
7. Explain NSN difference				X
8. Substance and/or ammunition data base recording forms (DD Forms 2738 and 2739)	X	X	X	

Notes:
"X" identifies essential supporting data needed for each method. See paragraph 3–2*b*.

(1) Hazard Classification by Test. This method is generally used when the unique qualities of the developmental item prevent a valid analogy to a current hazard classified item which has been tested. The minimum essential supporting data required includes:

(a) Report of tests conducted in accordance with chapters 5 and 6 (see example data forms in figs 6–7 and 6–8), or conducted under an alternate test plan approved by the Department of Defense Explosives Safety Board (DDESB) following Tri-Service coordination (para 3–2*g*.) Note that use of an alternate test must be referenced in the report of tests.

(b) A technical data package including:

1. A chart of the hazardous materials.

2. Item drawings.

3. Packaging drawings.

4. Functional narrative of the item.

(c) Substance and/or Ammunition Data Base Recording Form (see example data forms in figs 6–7 and 6–8).

(2) Hazard Classification by Analogy. Since thousands of ammunition items were classified using approved test procedures, many new items may be classified by close analogy to one of them. **Only items classified by actual tests may be used as the parent for analogy.**

(a) The following engineering analyses and rationale are mandatory requirements for hazard classification by analogy:

1. Similarities of the chemical and physical properties of all explosives and other chemical components of items under analysis being compared.

2. Item ignition source and out-of-line safety features (mechanical or electrical).

3. Item design concepts, features, properties, etc.

4. Other pertinent hazardous characteristics associated with the items involved.

5. Items may be classified 1.4S by analogy in obvious cases (such as small arms ammunition of identical caliber and net explosive weight (NEW)) or when the new item contains less explosives than the tested item, and there is no valid reason to suspect it will violate 1.4S criteria.

(b) The minimum essential supporting data required to be submitted with a request to hazard classify a new item by analogy includes:

1. A technical data package per paragraph 3–2*b*(1) (b) above.

2. A comparison chart of the parent item to the new item to include the EX number of the parent item.

3. A summary of the tests conducted and the results obtained for the parent item.

4. Substance and/or Ammunition Data Base Recording Form, (see example data forms in figs 6–7 and 6–8).

(3) Pre-1980 Items. These items were properly hazard classified prior to 1980 but were not included in the initial Joint Hazard Classification System (JHCS) database (see chap 8) and were never assigned an EX number by DOT. These items may be forwarded for filing with DOTsupported by the following minimum essential data:

(a) A technical data package per paragraph 3–2*b*(1) (b) above.

(b) The date the item was released for field use.

(c) The hazard classification of record.

(d) Substance and/or Ammunition Data Base Recording Form (see example data forms in figs 6–7 and 6–8.

(4) Not New Items. An item is not always considered new when it is assigned a new National Stock Number (NSN). A new NSN may be assigned to an item due to a change in electronics, hardware, minor elements of packaging such as latches or ties, or other changes without affecting its explosive characteristics. However, alterations of explosive components may require the item to be hazard classified as a new explosive as defined in 49 CFR 173.56 (see App A, Ref 3). The responsible DODC Hazard Classifier (para 3–3*a*) will determine whether or not a new NSN requires hazard classification as a new item. Tri-Service coordination is not required for submitting a not new item through DDESB to DOT. The minimum supporting data required for a not new item submission follows:

(a) A technical data package per paragraph 3–2*b*(1) (b) above.

(b) A comparison chart of the existing (parent) item and the item with a different NSN.

(c) Assurance that the existing, or parent, item is in the JHCS database including the EX number.

(d) An explanation of why the NSN was changed.

NOTE: Not new items include CARTRIDGES, SMALL ARMS that satisfy the provisions of 49 CFR 173.56(h) (see App A, Ref 3), and these not new items may be assigned Hazard Classification 1.4S by the DODC Hazard Classifier.

c. For approval purposes, the DODC Hazard Classifiers in paragraph 3–3*a*, assigning the hazard classification will forward the supporting documentation to the other organizations listed, and the DDESB (para 3–3*b*). The DDESB documentation will include completed data forms (see example data forms in figs 6–7 and 6–8) except for not new items and a memorandum on DDESB letterhead addressed through Military Traffic Management Command (MTMC) to the DOT (see fig 3–1 for sample format). The memorandum must bear the certification that the item has been examined and approved in conformance with the procedures prescribed in this publication for signature by the Chairman, DDESB.

d. Upon receiving the supporting documentation for a proposed hazard classification, each of the DODC Hazard Classifiers will advise the DDESB in writing within 30 days of concurrence or nonconcurrence. Failure to reply within 30 days indicates concurrence. The DDESB will resolve nonconcurrence within 30 days of notification.

e. Upon completion of the DDESB review and concurrence, the cover memorandum (fig 3–1) and the supporting documentation will be forwarded to MTMC. MTMC will supply the DoD file number and forward the package to DOT within seven days providing a copy of the forwarding memorandum (fig 3–1) to the DODC's listed

in paragraph 3–3*b*. MTMC will assure that the responsible DODC and the DDESB are apprised of the EX number assigned by DOT.

f. The responsible DODC should invite other components to observe significant hazard classification tests.

g. When test requirements of this document cannot be met for a specific item, the responsible DODC Hazard Classifier (para 3–3*a*) will forward a proposed alternate test plan to the DDESB for review and approval, and to the other DODC Hazard Classifiers for coordination using the same procedures used for proposed hazard classifications (para 3–2*d*). Alternate test plans may not be used without DDESB approval to avoid delays and potential retesting efforts.

3–3. Notification of classifications

a. The DODC offices of primary responsibility for hazard classification are listed below.

Director
U.S. Army Technical Center for Explosives Safety
ATTN: SIOAC–EST
Savanna, IL 61074–9639

Commander
Naval Ordnance Center
ATTN: N71
Farragut Hall, Building D–323
23 Strauss Avenue
Indian Head, MD 20640–5555

Air Force Safety Center
ATTN: SEWV
9700 Avenue G
Kirtland AFB, NM 87117–5670

b. The DODC responsible for determining the hazard classifications will furnish notifications of classifications assigned and supporting documentation to the following:

(1) For concurrence:

Director
U.S. Army Technical Center for Explosives Safety
ATTN: SIOAC–EST
Savanna, IL 61074–9639

Commander
Indian Head Division
Naval Surface Warfare Center
ATTN: Code 04
101 Strauss Avenue
Indian Head, MD 20640–5035

Air Force Safety Center
ATTN: SEWV
9700 Avenue G
Kirtland AFB, NM 87117–5670

(2) For concurrence and transmittal through MTMC to DOT:

Chairman
Department of Defense Explosives Safety Board
Hoffman Building I, Room 856C
2461 Eisenhower Avenue
Alexandria, VA 22331–0600

c. Figure 3–1 will be used as the format for DDESB signature. The DDESB letterhead stationary is used for this purpose and filled out by the DODC. Request the format be as exact as practicable.

d. For information, following assignment of the EX number, MTMC will furnish notification of final hazard classification (supporting documentation need not be furnished).

Commandant
U.S. Coast Guard
ATTN: Hazardous Cargo Division
2100 Second Street, S.W.
Washington, DC 20593–0001

Director
Defense Logistics Agency
ATTN: AQCOI
Cameron Station
Alexandria, VA 22304–6190

DEPARTMENT OF DEFENSE EXPLOSIVES SAFETY BOARD
2461 EISENHOWER AVENUE
ALEXANDRIA, VIRGINIA 22331-0600

DDESB-KT

MEMORANDUM THRU COMMANDER, MILITARY TRAFFIC MANAGEMENT COMMAND, ATTN: MTOP-OPS, 5611 COLUMBIA PIKE, FALLS CHURCH, VA 22041-5050

FOR ASSOCIATE ADMINISTRATOR FOR HAZARDOUS MATERIALS SAFETY, MATERIAL TRANSPORTATION BUREAU, RSPA/DOT, 400 7TH STREET, S.W., WASHINGTON, DC 20590

SUBJECT: Final Hazard Classification for Fuze, Grenade, M219A2, Pre-1980/Not New Item for EX Number XXXXXXX/by Analogy to EX Number XXXXXXX/by Test

1. Reference memorandum, USATCES, SIOAC-EST, 1 Oct 92, same subject as above (encl).

2. Based on the information submitted in referenced memorandum, the following hazard classification is submitted in accordance with 49 CFR 173.56(b). Request these items be placed on file with the Department of Transportation (DOT).

DODC	Nomenclature/NSN	Shipping Description	HD/CG	UN
USA/ USN/ USAF	Fuze, Grenade, M219A2 NSN 1330-01-278-8976	Fuzes, Detonating	1.4B	0257

3. This item has been examined and approved in conformance with the procedures of TB 700-2.

4. Request a copy of the DOT letter assigning the EX number for the above item be provided to this office and the following address: Director, U.S. Army Technical Center for Explosives Safety, ATTN: SIOAC-EST, Savanna, IL 61074-9639.

Attachments
as
cc (w/o encl):
USATCES (SIOAC-EST)
HQ AFSA/SEWV
IHDIVNAVSURFWARCEN (041)

FIRST NAME MI LAST NAME
Colonel, USA/USAF or Captain, USN
Chairman

DoD File # _____

See Paragraph 3-2.*e*

Figure 3-1. Method for establishing final hazard classification.

Chapter 4
Hazard Classification

4–1. Scope

a. The purpose of this chapter is to assure that DODCs employ standard procedures for the assignment of the hazard classifications to ammunition and explosives based on the predominant hazard. Resultant assessments provide a means of readily identifying the hazard characteristics of ammunition (containing Class 1 material) and explosives through assignment of hazard categories established for storage and transport as explained in paragraphs 4–2 through 4–7.

b. The Department of Energy (DOE) is authorized by DOT 49 CFR paragraph 173.56(b)(3) (App A, Ref 3) to examine, classify and approve explosives in accordance with these hazard classification procedures as described in applicable DOE orders and manuals.

c. If an ammunition item is established to be non-Class 1 based on predominant hazard (see para 1–6), then the tri-service coordinated DoD and DOE hazard classification must be assigned according to the properties of the predominant hazard in accordance with 49 CFR 173 (App A, Ref 3). See NOTE in paragraph 3–1*a*.

4–2. DOT hazard classes

a. The hazard classes listed in Table 4–1 below are DOT designators (based on United Nations (UN) recommendations, (see App A, Ref 4)) to denote the type of material.

Table 4–1
DOT hazard classes designator

Hazard class	Material
Class 1	Explosives
Class 2	Gases
Class 3	Flammable liquids
Class 4	Flammable solids
Class 5	Oxidizing substances, organic peroxides
Class 6	Poisonous (toxic) and infectious substances
Class 7	Radioactive material
Class 8	Corrosive substances
Class 9	Miscellaneous dangerous substances

Notes:

[1] If a material is not in Class 1, then procedures in 49 CFR 173 (App A, Ref 3) are to be followed for hazard classification.

[2] Within Class 6, only one division is utilized for ammunition, Hazard Division 6.1, which denotes poisonous (toxic) substances.

b. The hazard division is a designator assigned to denote the character and predominance of the associated hazards and the potential for causing personnel casualties or property damage.

4–3. Hazard Class 1 assignment procedures

a. Test procedures and other information prescribed in Chapter 5 of this publication should be used to determine the appropriate hazard division for ammunition and explosives (Hazard Class 1).

b. Within Class 1 (explosives), there are six divisions (given in Table 4–2 below) which indicate the type of hazards expected.

Table 4–2
DOT hazard class 1 divisions

Hazard division	Hazard
1.1	Mass explosion
1.2	Non-mass explosion, fragment producing
1.3	Mass fire, minor blast, or fragment
1.4	Moderate fire, no blast, or fragment
1.5	Explosive substance, very insensitive (with mass explosion hazard)
1.6	Explosive article, extremely insensitive

c. Supplementing the above, a numerical designator in parentheses will be placed to the left of the hazard division for 1.1 through 1.3, such as (12)1.1, (08)1.2, or (06)1.3 when required to properly describe the hazard. This number is used to designate the minimum separation distance (in hundreds of feet) to provide specified levels of protection from hazardous fragments or firebrands produced by ammunition and explosive items. A minimum distance number will be used for all items in Hazard Division 1.2. For items in Hazard Division 1.1 and 1.3, a minimum distance number will be used where minimum separation distances from limited quantities are greater than that specified by the applicable explosives safety quantity-distance table in DoD 6055.9–STD (App A, Ref 1).

4–4. Hazard Classes 2 through 9 assignment procedures

a. While classifying an ammunition item, if the predominant hazard is determined to be other than Class 1 (i.e., Classes 2 thru 9), definition and criteria for these classes can be found in Title 49–Transportation, Code of Federation Regulations (see App A, Ref 3).

b. The available hazard divisions for Classes 2 through 9 items are given in Table 4–3 below.

Table 4–3
DOT Hazard class 2 thru 9 division

Hazards Divisions	Materials
Class 2	
2.1	Flammable gas
2.2	Non-flammable, non-poisonous compressed gas
2.3	Gas poisonous by inhalation
Class 3	Flammable liquids
Class 4	
4.1	Flammable solid
4.2	Spontaneously combustible material
4.3	Dangerous when wet material
Class 5	
5.1	Oxidizer
5.2	Organic peroxide
Class 6	
6.1	Poisonous material
6.2	Infectious substance
Class 7	Radioactive material
Class 8	Corrosive material
Class 9	Miscellaneous hazardous materials

4–5. Non-Class 1 and non-regulated

When function testing (at least three repetitions) of an unpackaged article demonstrates that explosive effects are contained within the item itself (as is frequently the case with certain devices such as thermal batteries, and some aircraft escape system components), that item may be assigned as "non-Class 1" or "non-regulated" (or classified by predominate hazard) for transportation and storage and considered to be hand-held safe taking into account thermal and mechanical effects (see para 1–8 and footnote to para 5–7*c*(4)(f)*1)*.

4–6. Compatibility group assignment procedure

Assignment of the appropriate compatibility group is by definition. It is usually obvious from the description of the ammunition. Where there is doubt about the interpretation of the definitions of the compatibility groups (para 4–7), it may be helpful to consult a list of classifications of existing types of ammunition. Compatibility Group S is an exception in that testing is a prerequisite for assignment to this group; except for those instances classified by analogy described in paragraph 3–2*b*(2) (a)5. Testing is also a prerequisite for assignment to Compatibility Group N.

4–7. Compatibility groups

Ammunition and explosives are assigned to the appropriate one of 13 transportation and storage compatibility groups (A through H, J, K, L, N, and S).

a. Group A—initiating explosives. Packaged initiating explosives that have the necessary sensitivity to heat, friction, or percussion to make them suitable for use as initiating elements in an explosive train. Examples are lead azide, lead styphnate, mercury fulminate, tetracene, and PETN.

b. Group B—detonators and similar initiating devices. Items containing initiating explosives that are designed to initiate or continue the functioning of an explosive train. Examples are detonators, blasting caps, small arms primers, and fuzes without two or more safety features.

c. Group C—packaged propellants, propelling charges, and devices containing propellant with or without their means of ignition. Items that upon initiation will deflagrate or explode. Examples are single-, double-, triple-base, and composite propellants, rocket motors (solid propellant), and ammunition with inert projectiles.

d. Group D—black powder, secondary high explosives (HE), and ammunition containing secondary HE without its own means of initiation and without propelling charge, or ammunition containing a primary explosive and two or more effective features. Ammunition and explosives that can be expected to explode or detonate when any given item or component thereof is initiated. Examples are: bulk TNT, Composition B, black powder, wet RDX, bombs, projectiles, cluster bomb units (CBUs), depth charges, torpedo warheads, and fuzes with two or more safety features.

e. Group E—ammunition containing HE without its own means of initiation and with propelling charge (other than liquid). Ammunition or devices containing HE and containing propelling charges. Examples are artillery ammunition, rockets, or guided missiles.

f. Group F—ammunition containing HE with its own means of initiation and with a propelling charge (other than liquid) or without propelling charge. HE ammunition or devices (fuzed) with or without propelling charges. Examples are grenades, sounding devices, and similar items having an in-line explosive train in the initiator.

g. Group G—pyrotechnic substances, fireworks, illuminating, incendiary, smoke including HC, or tear-producing munitions other than those munitions that are water activated or which contain white phosphorus (WP) or flammable liquid or gel. Ammunition that, upon functioning, results in an incendiary, illumination, lachrymation, smoke, or sound effect. Examples are flares, signals, incendiary or illuminating ammunition, and other smoke- or tear-producing devices and pyrotechnic substances.

h. Group H—ammunition containing both explosives and white phosphorus. Ammunition in this group contains white phosphorus fillers that are spontaneously flammable when exposed to the atmosphere. Examples are ammunition containing WP and PWP.

i. Group J—ammunition containing both explosives and flammable liquids or gels. Ammunition in this group contains flammable liquids or gels other than those that are spontaneously flammable when exposed to water or the atmosphere. Examples are liquid- or gel-filled incendiary ammunition, fuel-air explosive (FAE) devices, flammable liquid-fueled missiles, and torpedoes.

j. Group K—ammunition containing both explosives and toxic chemical agents. Ammunition in this group contains chemicals specifically designated for incapacitating effects more severe than lachrymation. Examples are artillery or mortar ammunition, fuzed or unfuzed, grenades, and rockets or bombs filled with a lethal or incapacitating chemical agent.

k. Group L—ammunition and explosives not included in other compatibility groups. Ammunition or explosives having characteristics that do not permit storage with other types of ammunition or kinds of explosives or dissimilar ammunition of this group. Examples are water-activated substances, phosphides, and pyrophoric substances and devices containing these substances; hypergolics and hypergolic prepackaged liquid-fueled rocket engines; TPA (thickened TEA) and damaged or suspect ammunition of any group.*

l. Group N—ammunition containing only extremely insensitive detonating substance (EIDS). Examples are bombs and warheads. If dissimilar Group N munitions are mixed together and have not been tested to assure non-propagation, then the mixed munitions are considered to be Hazard Division 1.2, compatibility Group D for purposes of transportation and storage.

m. Group S—ammunition presenting no significant hazard. See paragraphs 3–2*b*(4), 5–7*c*(4)(e) and (f), and 6–5*b*(7). Ammunition that is packaged or designed so that any hazardous effects arising from accidental functioning are confined within the package. That is unless the package has been degraded by fire, in which case all blast or projection effects are limited to the extent that they do not significantly hinder firefighting or other emergency response efforts in the immediate vicinity (i.e., 5 meters) of the package. Examples are thermal batteries, explosive switches or valves, and other ammunition items packaged to meet the criteria of Group S items.

*Ammunition/explosives presenting same or similar hazards within this group may be stored together. However, items with dissimilar hazards within this group must be kept separate and apart from all other items.

4–8. Assignment of DOT identification number (United Nations number)

A four-digit Arabic number for transport identification of an item is to be assigned. These numbers are listed in 49 CFR 100 TO 177 paragraph 172, (see App A, Ref 3) which is for sale by the Superintendent of Documents, U.S. Government Printing Office, Mail Stop SSOP, Washington, DC 20402–9328. These numbers are also given in the UN publication entitled "Recommendations on the Transport of Dangerous Goods," (see App A, Ref 4), which is available from the United Nations Sales Section, New York, NY 10017.

4–9. Explosive weights for Class 1 items

a. High Explosive Weight (HEW). The total weight of all Hazard Division 1.1 material contained in an item.

b. Net Propellant Weight (NPW). The total weight of Hazard Division 1.3 material contained in an item.

c. Net Explosive Weight (NEW). NEW = HEW + NPW. The total weight of all Class 1 material in an item, stack of items, ship, vehicle, aircraft, cubicle or building. For instance, the NEW of an entire ship's cargo is required on the manifest for shipment under the International Maritime Dangerous Goods Code (IMDG).

d. Net Explosive Weight for Q-D (NEWQD). NEWQD = NEW unless testing has been conducted (see paras 6–1*a* and 6–2). Based on testing, the NEWQD may include a contribution (less than or equal to 100%) from Hazard Division 1.3 material when the Hazard Division 1.1 material has been functioned. The test protocol and the determination of NEWQD requires approval by the DDESB. The NEWQD may not be acceptable for transportation over the highways or aboard ships. The value of applying NEWQD occurs in storage configurations and when items are deployed.

NOTE: Quantity distance (Q–D) is defined in Chapter 2.

4–10. Storage without interim hazard classification

Occasions may arise, particularly in manufacturing and laboratory environments, that dictate storage of explosive samples or items without interim hazard classifications. In such circumstances, the cognizant DODC Hazard Classifier will establish procedures for assigning hazard classification and compatibility group for storage. This material will not be transported from the installation or development location until the necessary interim hazard classifications are received. See paragraph 1–7 for an exception for transporting small explosive samples.

Chapter 5
Tests

5–1. Hazard classification test protocol

a. Introduction. This chapter prescribes the tests that are required by 49 CFR (App A, Ref 3) for transport purposes and by STANAG 4123, (App A, Ref 2) and DoD 6055.9–STD (App A, Ref 1) for the

establishment of storage hazard classifications. The test requirements described conform to the tests recommended by the United Nations (UN) Committee of Experts on the Transport of Dangerous Goods which are documented in Recommendations on the Transport of Dangerous Goods, Tests and Criteria (see App A, Ref 6). The tests are divided into seven series which are described below:

(1) UN Series 1—Detonability tests for new substances.

(2) UN Series 2—Insensitivity tests for new substances.

(3) UN Series 3—Hazard tests for handling and transporting new substances.

(4) UN Series 4—Hazard tests for handling and transporting new articles, packaged articles and packaged substances.

(5) UN Series 5—Hazard Division 1.5 tests (very insensitive explosive substance (with a mass explosion hazard)).

(6) UN Series 6—Hazard Classification tests (Hazard Divisions 1.1, 1.2, 1.3, and 1.4).

(7) UN Series 7—Hazard Division 1.6 tests (extremely insensitive explosive articles which contain extremely insensitive detonating substances (EIDS)).

b. Test protocol. The general scheme for hazard classifying explosive substances and articles is given in Figure 5–1. United States test options are selected from the UN recommendations for the DoD and DOT test protocol. All hazard classification tests referenced in this document are referred to by the UN designation (numbering system), such as Test 1(a) (iii). Use of optional tests in the UN protocol is acceptable. Note that a "negative (-)" response to a test indicates a "pass"response whereas a "positive (+)" response indicates a "fail"response.

(1) Optional substance tests. UN Series 1 and Series 2 tests listed below are not required for DoD substances manufactured with the view to producing a practical explosive or pyrotechnic effect (see Box 2 in fig 5–1).

(a) Test 1(a) (iii)—Gap Test for Solids and Liquids (para 5–2*a*).

(b) Test 1(b) (ii)—Internal Ignition Test (para 5–2*b*).

(c) Test 1(b) (iii)—Slow Cookoff Bomb (SCB) Test (para 5–2*c*).

(d) Test 2(a) (iii)—Gap Test for Solids and Liquids (para 5–3*a*).

(e) Test 2(b) (ii)—Internal Ignition Test (para 5–3*b*).

(f) Test 2(b) (iv)—Slow Cookoff Bomb (SCB) (para 5–3*c*).

(2) Mandatory substance tests. The acceptance procedure for any substance designed to have an explosive effect begins with the application of UN Test Series 3. Note that Test Series 1 and 2 are not required for substances designed to have an explosive effect. **A substance is forbidden for transport if a positive (+) response is obtained with any of the following tests:**

(a) Test 3(a) (i)—Bureau of Explosives Impact Machine Test (para 5–4*a*).

(b) Test 3(b) (iii)—ABL Friction Test (para 5–4*b*).

(c) Test 3(c)—Thermal Stability Test at 75°C (para 5–4*c*).

(d) Test 3(d) (i)—Small-Scale Burning Test (para 5–4*d*).

(3) Explosive article, packaged or unpackaged, or a packaged explosive substance tests.

(a) Substances that fail Test 3(c) (thermal stability) are forbidden. For this reason, it is recommended that test 3 (c) be the first test conducted. Substances that fail Test 3(a) (i) (impact), Test 3(b) (iii) (friction), and/or Test 3(d) (i) (small-scale burn) may be encapsulated and/or packaged (Box 13, fig 5–1) and subjected to Test 4(b) (ii) (12 meter drop test) for possible acceptance into Class 1.

(b) New articles must be subjected to Test Series 4, when appropriate, for possible acceptance into Class 1. Items are forbidden for transport if the appropriate Series 4 tests (listed below) are not conducted, or if a positive (+) test response is obtained.

Note. It is appropriate (mandatory) to conduct 4(a) on an article or packaged article when a substance used in the article has not passed Test 3(c). It is appropriate (mandatory) to conduct Test 4(b)(i) (for liquids) or 4(b)(ii) (for solids) on articles, packaged articles, or packaged substances when substances in the items have not passed Tests 3(a)(i), 3(b)(iii), and 3(d)(i), or equivalent tests.

1. Test 4(a)—Thermal Stability Test for Articles and Packaged Articles (para 5–5*a*)—does not apply to packaged substances. Thermal stability testing of an article or packaged article is appropriate if the new article contains a substance that has not been subject to Test 3(c), or if the chemical compatibility of explosive substances and the materials with which they are in contact has not been established.

2. Test 4(b)(i)—Steel Tube Drop Test for Liquids (para 5–5*b*).

3. Test 4(b) (ii)—Twelve Meter Drop Test for Articles and Solid Substances (para 5–5*c*).

(4) Hazard Division 1.5 explosives tests. A substance may not be classified as a Hazard Division 1.5 explosive if a positive (+) response is obtained with any of the tests in Series 3 (listed above) or with any of the following tests in Series 5:

(a) Test 5(a)—Cap Sensitivity Test (para 5–6*a*).

(b) Test 5(b) (ii)—DDT Test (para 5–6*b*).

(c) Test 5(c)—External Fire Test for Hazard Division 1.5 (para 5–6*c*).

(d) Test 5(d)—Princess Incendiary Spark Test (para 5–6*d*).

(5) Hazard Divisions 1.1, 1.2, 1.3, and 1.4 tests. Explosive articles, packaged or unpackaged or packaged explosive substances are classified among Hazard Divisions 1.1, 1.2, 1.3 and 1.4 according to their responses in Test Series 6 as described in paragraph 5–7. The tests in Series 6 are:

(a) Test 6(a)—Single Package Test (para 5–7*a*).

(b) Test 6(b)—Stack Test (para 5–7*b*).

(c) Test 6(c)—External Fire (Bonfire) Test (para 5–7*c*).

(d) Approved alternate test procedures for Hazard Division 1.2 and for classifying solid rocket motors are provided in paragraphs 6–6*b*and 6–6*c*, respectively. Also, guidance on airblast data collection, airblast hazard evaluation and interpretation, fragment collection, fragment hazard evaluation and interpretation, and thermal effects data collection, evaluation and interpretation is given in Chapter 6.

(e) For purposes of hazard classification for DoD storage of liquid explosives, an additional test is required; The Flash Point Test (para 5–9). Liquid explosives with a flash point below 95°C (positive (+) response)) are forbidden for storage.

(6) Hazard Division 1.6 tests.

(a) A substance intended for use as an explosive load of a Hazard Division 1.6 article may not have a positive (+) response with any of the substance tests in Test Series 3 (listed above) or Test Series 7 and is classified as an extremely insensitive detonating substance (EIDS). The UN, DOT, and the DoD consider bulk EIDS as a Hazard Division 1.5 substance.

Note. If the EIDS is stored or transported separately as Hazard Division 1.5, then the EIDS must be pass Test Series 5. See comments below for storage of packaged EIDS "articles." The Series 7 substance tests are listed below (note that the Friability Test is an approved alternate test for both the Susan Impact Test and the EIDS Bullet Impact Test):

1. Test 7(a)—EIDS Cap Test (para 5–8*a*).

2. Test 7(b)—EIDS Gap Test (para 5–8*b*).

3. Test 7(c) (i)—Susan Impact Test (para 5–8*c*); or,

4. Test 7(c) (ii)—Friability Test (para 5–8*d*).

5. Test 7(d) (i)—EIDS Bullet Impact Test (para 5–8*e)*) or,

6. Test 7(d) (ii)—Friability Test (para 5–8*d*).

7. Test 7(e)—EIDS External Fire Test (para 5–8*f*).

8. Test 7(f)—EIDS Slow Cookoff Test (para 5–8*g*).

(b) An article intended to be a Hazard Division 1.6 article must contain only EIDS and may not have a positive (+) response with any of the Test Series 7 article tests. **Note that packaged bulk EIDS that satisfies these same criteria may be classified as a Hazard Division 1.6 article for storage.**The Series 7 article tests are listed below.

1. Test 7(g)—1.6 Article External Fire Test (para 5–8*h*).

2. Test 7(h)—1.6 Article Slow Cookoff Test (para 5–8*i*).

3. Test 7(j)—1.6 Article Bullet Impact Test (para 5–8*j*).

4. Test 7(k)—1.6 Article Propagation Test (para 5–8*k*).

(7) Lethal and incapacitating chemical munitions. These items will be tested under criteria unique to chemical weapons.

5–2. UN Test Series 1 (optional)

These tests are conducted to answer the question "Is it an explosive

substance?" The test series includes shock and combustion or thermal tests. Note that the Internal Ignition Test—1(b) (ii) (para 5–2*b*) and the Slow Cookoff Bomb (SCB) Test—1(b) (iii) (para 5–2*c*) are alternate tests.

Note. Test Series 1 results cannot be used to remove a "substance manufactured with the view to producing a practical explosive or pyrotechnic effect"from Class 1 (see fig 5–1).

a. Gap test for solids and liquids—(UN Test 1(a) (iii)).

(1) Introduction. This test is designed to determine whether a liquid or solid substance will maintain a stable detonation and, if it does, measure its shock sensitivity. The sample is loaded in a steel tube of specific dimensions and is subjected to the shock wave generated by the detonation of a pentolite booster.

(2) Apparatus and materials.

(a) Solids. The apparatus for the Gap Test for solids is shown in Figure 5–2. The test sample is contained in a seamless carbon steel cylinder. Spacers are used to separate a mild steel witness plate from the sample tubing at the upper end. The bottom of the cylinder is closed with two layers of polyethylene sheets held in place with gum rubber bands and polyvinylchloride electrical insulating tape. There is no other gap between the pentolite booster and the test sample. A continuous velocity of detonation probe (see App A, Ref 7) made of thin aluminum tube with an axial resistance wire having a resistance of 3.0 ohms/cm (7.6 ohms/in) is mounted on the wall of the sample tubing. The outer tubing of the probe is crimped against the inner wire at the lower end forming a resistor. As a detonation wave moves up the tubing, the outer wall crushes against the inner wire, shortening the effective length and changing the resistance of the wire. If a constant current (usually 0.06 amperes) is made to flow between the outer and inner conductors, the voltage between them is proportional to the effective length and can be recorded as a function of time using an oscilloscope. The slope of the oscilloscope trace is thus proportional to the velocity of the shock wave.

(b) Liquids. The apparatus for the Gap Test for liquids is the same as that for solids except that a better method of sealing the bottom of the tube must be used. The recommended method is to fuse a 0.05 to 0.08 mm (0.002 to 0.003 inch) thick sheet (thicker sheets may adversely affect results) of fluorocarbon or other compatible plastic to the tube. Any suitable technique may be used, however, each tube should be checked for leaks before use. The experimental setup is shown in Figure 5–3. For liquids which may be sensitive to adiabatic compression of bubbles, the tests should be conducted with air bubbles being injected near the bottom of the sample at the time of test. Air is supplied at a pressure of 30 to 100 kPa (4.4 to 14.5 psi) to obtain a flow rate of 1.2 liters/minute (7.1 x 10^{-4}cubic feet/second). The bubbles may be created by a small plastic frit or by holes punched in a loop of vinyl plastic tubing. The tubing supplying the frit or forming the loop should be about 2.0 mm (0.08 in) OD such as for medical catheterization. Holes may be made by perforating the tubing forming the loop with a 1.3 mm (0.051 in) diameter needle and allowing the elastic nature of the tubing to contract the hole. The number of holes and amount of bubbling should be consistent for all tests of a sample or for a sufficient number of tests to establish repeatability. The submerged end to the bubbler shall be plugged with a suitable cement. The air supply tubing may be introduced from the top of the sample tube or through a hole through the side near the bottom and sealed with a suitable cement. Where it is suspected the sample may react with the metal of the test gap tube, the interior of the tube should be coated with suitable material such as fluorocarbon resin spray.

(3) Procedure. The sample is loaded to the top of the steel tube. For liquid samples, adequate ullage should be allowed. Solid samples are loaded to the density attained by tapping the cylinder until further settling becomes imperceptible. The sample is tested at ambient conditions (25 +/- 2°C) and is subjected to the shock wave generated by the detonation of a 165 g (2550 grain) pentolite (50/50 PETN/TNT) pellet. The pentolite pellet is in intimate contact with the bottom of the test sample and initiated with a standard No. 8 detonator shown in Figure 5–4. The detonator is held in place by a cork detonator holder. Three tests should be performed on each sample.

(4) Criteria and method of assessing results.

(a) The criteria for propagation are:

1. A stable propagation velocity greater than the velocity of sound in the substance.

2. A hole is punched through the witness plate.

3. The sample tube is fragmented along its entire length.

(b) The overall test results are considered positive (+) if any two of the three criteria listed above are met.

b. Internal ignition test (UN Test 1(b)(ii)).

(1) Introduction. The Internal Ignition Test is designed to determine the response of substances to rapidly rising temperatures and pressures.

(2) Apparatus and material.

(a) The experimental arrangement is shown in Figure 5–5. The sample of the substance to be tested is contained in a steel pipe which is capped on both ends. An igniter consisting of black powder (100% passed through a No. 20 sieve, 0.84 mm (0.033 in) and 100% retained by a No. 50 sieve, 0.297 mm (0.0117 in)) is located at the center of the sample vessel.

(b) The igniter assembly consists of a cylindrical container made with 0.54 mm (0.021 in) thick cellulose acetate held together by two layers of nylon filament reinforced cellulose acetate tape. The igniter capsule contains a small loop formed from a 25.4 mm (1.0 in) length of nickel-chromium alloy wire 0.3 mm (0.012 in) in diameter and having a resistance of 0.35 ohms. This loop is attached to two insulated tinned copper leading wires. The tinned copper wires are 0.66 mm (0.026 in) in diameter with a 1.3 mm (0.051 in) outside diameter (including insulation). These wires are installed through small holes in the pipe which are sealed with epoxy resin.

(3) Procedure. The sample is loaded into the pipe to a height of 230 mm (9 in). A 20 g (310 grain) igniter is inserted into the center of the pipe, the leads are pulled taut and then sealed with epoxy resin. The remainder of the sample is then loaded and the top cap screwed on. The igniter is fired by applying a 20 V, 15 ampere current. Three tests are performed on each substance.

(4) Criteria and method of assessing results. The criteria for the Internal Ignition Test are:

(a) Positive (+) result if either the pipe or one of the end caps is fragmented into at least two distinct pieces separated from the pipe.

(b) Negative (-) result if the reaction is no more violent than the pipe is either just split (laid open, not fragmented) or the end caps are only distorted.

c. Slow cookoff bomb (SCB) test (UN Test 1(b) (iii)).

(1) Introduction. The Slow Cookoff Bomb (SCB) Test simulates transport and storage situations which could expose substances to slow external heating.

(2) Apparatus and material. The experimental arrangement is shown in Figure 5–6. The sample of substance to be tested is contained in a steel vessel. Two 400-watt electric heaters are fastened to the steel vessel. The vessel has a steel cover with two feedthrough fittings for the thermocouple leads and for a pressure takeoff. The mounting frame consists of two steel witness plates with four bolts that clamp the SCB vessel between them. The vessel is instrumented with one or two plate-type thermocouples; one is spot welded to the center of the vessel wall, and another, if needed, is placed in the center of the substance that is tested. The plate-type thermocouples consist of a 0.3 mm (0.01 in) thick nichrome ribbon approximately 10 mm (0.4 in) square, with the thermocouple wires fanned out and individually spot welded to the nichrome. Plate-type rather than bead-type thermocouples are used in the SCB since plate-type thermocouples give faster response and more representative measurement of the temperature of the interfaces.

(3) Procedure. Test substance in the form of a solid, liquid, slurry or powder is loaded to capacity of the steel vessel of the SCB unit. Sufficient ullage should be allowed so that the vessel will not be liquid full at 400°C. The SCB unit is assembled and placed in a safe testing bay; it is heated by connecting the two 400 watt heaters to 120 VAC or 120 VDC. Strip-chart recorders can be used to record the temperature of the SCB unit and the time to cookoff. The

heating rate is maintained at 3°C/min. The test is started at 25° +/− 3°C and continued until a reaction occurs or a temperature of 400°C is reached.

(4) Criteria and method of assessing results. Time and temperature of a substance reaction (cookoff) are taken from the chart records (for information purposes only), and an assessment of the severity of the reaction is made from the number and condition of the vessel fragments and the condition of the witness plate. Levels of reaction to be identified are:

(a) The result of the test is considered negative (-) if the SCB is in one piece (not ruptured or fragmented) and the witness plates are not deformed or punctured;

(b) The result of the test is considered positive (+) if any of the following occurs:

1. SCB apparatus is ruptured.
2. SCB apparatus is fragmented.
3. Witness plate is deformed.
4. Witness plate is punctured.

5–3. UN Test Series 2 (optional)

These tests are conducted to answer the question "Is the substance too insensitive for acceptance into Class 1?" The test series includes shock and combustion or thermal tests used in Test Series 1 with less stringent pass/fail criteria. Note that the Internal Ignition Test—2(b) (ii) (para 5–3*b*) and the Slow Cookoff Bomb (SCB) Test—2(b) (iv) (para 5–3*c*) are alternate tests.

Note. Test Series 2 results cannot be used to remove a "substance manufactured with the view to producing a practical explosive or pyrotechnic effect" from Class 1 (see fig 5–1).

a. Gap test for solids and liquids (UN Test 2(a) (iii)).

(1) Introduction. The test is designed to measure the shock sensitivity and detonation propagation of a solid or liquid substance to determine whether the substance may be too insensitive for acceptance into Class 1. The sample is loaded in a steel tube of specific dimensions and is subjected to the shock wave generated by the detonation of a pentolite booster with a 5.08 cm (2.0 in - 200 cards) cast PMMA (polymethyl methacrylate) gap (plexiglass or equivalent) between the booster and the test sample.

(2) Apparatus and materials. The apparatus for solid substances is shown in Figure 5–7 and for liquid substances in Figure 5–8. This test is identical to the test of paragraph 5–2*a* except for the addition of a 5.08 cm (2.0 in) diameter by 5.08 cm (2.0 in) thick plexiglass buffer between the 165 g (2550 grain) pentolite donor and substance sample. For more details refer to paragraph 5–2*a*(2).

(3) Procedure. The procedure is the same as that described for paragraph 5–2*a*(3).

(4) Criteria and method of assessing results.

(a) The criteria for propagation are as follows:

1. A stable propagation velocity greater than the velocity of sound in the substance;
2. A hole is punched through the witness plate;
3. The sample tube is fragmented along its entire length.

(b) The overall test results are considered positive (+) if any two of the three criteria are met.

b. Internal ignition test (UN Test 2(b) (ii)).

(1) Introduction. The Internal Ignition Test for Test Series 2 uses the same apparatus as Test 1(b) (ii) with the exception that a 10 g (154 grain) instead of a 20 g (310 grain) fffg black powder igniter is used.

(2) Apparatus and materials. The test configuration (fig 5–5 and para 5–2*b*(2) with an igniter capsule of 3.2 cm (1.25 in) long is used.

(3) Procedure. The procedure of paragraph 5–2*b*(3) is used.

(4) Criteria and method of assessing results. The criteria for the Internal Ignition Test are:

(a) Positive (+) result if either the pipe or one of the end caps is fragmented into at least two distinct pieces separated from the pipe.

(b) Negative (-) result if the pipe is either split (laid open) or the end caps are distorted.

c. Slow cookoff bomb (SCB) (UN Test 2(b) (iv)).

(1) Introduction. The Slow Cookoff Bomb (SCB) Test experimental arrangement is shown in Figure 5–6.

(2) Apparatus and materials. The test is conducted with the apparatus described in paragraph 5–2*c*(2).

(3) Procedure. The test is conducted in accordance with the procedures described in paragraph 5–2*c*(3).

(4) Criteria and method of assessing results. Time and temperature of a substance reaction (cookoff) are taken from the chart records and an assessment of the severity of the reaction is made from the number and condition of the vessel fragments and the condition of the witness plates. Levels of reaction to be identified are:

(a) The result of the test is considered negative (-) if the SCB apparatus is in one piece. The apparatus may be ruptured but the witness plates cannot be deformed or punctured.

(b) The result of the test is considered positive (+) if any of the following occurs:

1. SCB apparatus is fragmented.
2. Witness plate is deformed.
3. Witness plate is punctured.

5–4. Test Series 3 (mandatory)

These tests are conducted to answer the question "Is the substance too hazardous for transport (in the form tested)?" The test series includes substance sensitivity tests for mechanical stimuli (impact and friction) and for heat and flame.

a. Bureau of Explosives impact machine (UN Test 3(a) (i)).

(1) Introduction. This test is designed to measure the sensitivity of the substance to mechanical stimuli involving normal impact to determine if the substance is too hazardous to transport. It is applicable to solid and liquid substances by using two different sample assemblies.

(2) Apparatus and materials. A drawing of the apparatus for the impact test is shown in Figure 5–9. The apparatus is designed so that a weight is free to fall between two parallel cylindrical guide rods from variable heights. The weight strikes a plunger-and-plug assembly which is in contact with the substance sample. The substance sample is placed on a die-and-anvil assembly confined in a cylindrical casing whose inside diameter is just sufficient to permit free movement of the plunger and plug. The plunger, plug, die, casing and anvil are hardened tool steel of hardness 50-55 on the Rockwell C scale and the mating surfaces and the surfaces in contact with the sample have a finish of 0.8 microns (32 micro-inches). The sample holder diameter is 5.1 mm (0.20 inches).

(a) Solid substances. The sample assembly for a solid substance is shown in Figure 5–10.

(b) Liquid substances. The sample assembly for liquid substances is shown in Figure 5–11.

(3) Procedure.

(a) Solids. Ten milligrams of the solid substance is loaded onto the die. The anvil and die are placed in the sample housing and the casing screwed down over them. The plug and plunger are then inserted on top of the sample. The drop weight is raised to the desired height and released. Ten measurements are performed at the specified drop height for each test sample. Either RDX or HMX is used as the reference explosive for evaluating the test results for each test series. Report the RDX or HMX calibration results along with the sample test results.

(b) Liquids. The rebound sleeve, the intermediate pin, and the striker are assembled in the striker housing. A copper cup is placed in a cup positioning block (not shown in fig 5–11) and one drop of the liquid substance is placed in the cup. The housing and its components are placed over the top of the cup positioning block. The end of the striker slips partway into the cup, but is prevented by the cup positioning block from actually touching the liquid in the cup. When the striker housing is lifted from the positioning block, the cup is held on the end of the striker by friction. The striker housing is then screwed down into the anvil housing and the dimensions of the tools are such that the bottom of the copper cup just touches the anvil when the striker housing is screwed in hand-tight. The whole unit is then placed in the same drop weight mechanism

which is used with the Bureau of Explosives' solid impact tester. For liquids, only one drop height is used. This is 25.40 cm (10 inches). The test is also conducted with the liquid absorbed in a piece of filter paper placed in the copper cup. Ten measurements are performed for each sample.

(4) Criteria and method of assessing results.

(a) Solids. The criteria used in the interpretation of this test for solids is that a measurement is considered positive if either an audible report or flame is observed. A sample is considered impact sensitive at a specific drop height if a flame or report is observed in at least 50% of the test trials. A sample which shows impact sensitiveness at a drop height of 10.16 cm (4.0 inches) or less (a positive (+) response) is considered too sensitive for transport.

(b) Liquids. The criterion used in the interpretation of this test for liquids is that a measurement is considered positive if either an audible report or smoke is observed in one of 10 test trials. Any liquid explosive which fails this test at a drop height of 25.4 cm (10.0 inches) or less (a positive (+) response) is considered too sensitive for transport.

b. ABL friction test (UN Test 3(b) (iii)).

(1) Introduction. This test determines the sensitivity of substances to friction. The test substance is subjected to vertical compression force under a non-rotating wheel, while the substance is moved in a horizontal direction on a sliding anvil. It is intended for both liquid and solid substances.

(2) Apparatus and materials. Figure 5–12 illustrates the apparatus. The wheel and anvil are constructed of steel with a finish of 1.52 micron (60 micro-inches). Force is applied hydraulically through the non-rotating wheel to the sample which rests on the anvil. A pendulum impacting on the edge of the anvil propels the anvil at a known velocity, perpendicular to the compressive force that is applied to the sample. Normally, the anvil slides 2.54 cm (1.0 in). The compressive force is measured by a gauge. The initial velocity is determined by calibration.

(3) Procedure. A sample of test substance at 25°C, and in a thin uniform layer (equivalent to one particle thickness for solids based on largest particle size in distribution) is placed on the anvil, under the wheel, 0.64 cm (0.25 in) wide, and extending 2.54 cm (1.0 in) along the sliding contact surface. The wheel is lowered onto the substance and force is applied to the wheel. An initial force of 4450 N (1,000 lb) is typical. In practice the force is changed in increments where the lower value is 75% of the higher value. Maximum values of 8000 N (1,800 lb) and minimum of 44 N (10 lb) are used. A velocity of 0.9 m/sec (3 ft/sec) is a typical choice, although increasing or decreasing velocity in increments of 0.3 m/sec (1 ft/sec) or more may be found useful in additional comparisons. The velocity is changed simply by altering the pendulum angle from vertical from which the pendulum is released. (Thirty degree approximates to 0.9 m/sec (3 ft/sec) slide velocity.)) A new sample is used on each trial, with cleaning of the anvil done between trials. An iterative procedure is used to determine the highest compressive force at which no positive (+) results are obtained in 20 trials. This value is considered the Threshold of Initiation (TIL). Dry pentacrythrite lentranitrate (PETN) is used as a reference explosive for evaluating the test results. Report the PETN results along with the sample results.

(4) Criteria and method of assessing results.

(a) A trial is considered positive (+) if any one of the following results is obtained:

1. Visible sparks.

2. Visible flame.

3. Audible explosion.

4. Loud crackling noise.

5. Detection of reaction products by a gas analyzer.

(b) Discoloration of the sample holder, crepitation (i.e., subdued cracking due to crumbling of the sample), or slight odor in the absence of indicators given by paragraph 5–4*b*(4) (a) above, are not considered positive (+) results.

(c) A substance with friction sensitivity equal to or greater than dry PETN, i.e., lower compressive force, is considered a positive (+) result and is too sensitive for transport. PETN has a TIL of 184 N (41.4 lb) at 0.9 m/sec (3 ft/sec).

c. Thermal stability test at 75°C (UN Test 3 (c)).

(1) Introduction. This test is designed to measure the stability of the substance when subjected to elevated thermal conditions to determine if the substance is too hazardous to transport in the state in which it was tested.

(2) Apparatus and materials.

(a) Apparatus. An oven is required for this test. If an electric oven is used, the heating elements shall be isolated from the test volume. The oven should be equipped with dual controls or a high temperature cutoff feature to preclude thermal runaway if the primary control fails. The control system should maintain the oven temperature at 75 +/- 2°C. The oven should be vented to allow vapors to escape. If it becomes necessary to run the second part of the test, additional apparatus as shown in Figure 5–13 is required. The additional apparatus is two flat bottomed glass tubes equipped with pressure resisting stoppers, three thermocouples and a recorder.

(b) Materials. For the second part of the test, an inert material with physical and thermal properties similar to those of the test substance will be used for the reference material.

(3) Procedure. The test is divided into two parts. The first part is used to determine if a sample shows obvious thermal instability by visual evidence of ignition, explosion, significant color change indicating some reaction or weight loss. The second part is used only in those cases where the first part does not provide a definite conclusion regarding the stability. In the second part, the thermocouple and recorder apparatus described is used to measure any self-heating of the sample.

(a) Thermal stability. A substance sample of up to 50 g (770 grains) is transferred to the tared beaker, covered and weighed. The beaker with cover is placed in the oven and heated at 75°C for 48 hours. Unless an ignition or explosion occurs in the sample and terminates the test, the beaker is removed after the heating period, cooled and weighed. The volatility (weight loss as a percentage of the sample weight) is calculated. Any loss greater than expected from loss of moisture shall be regarded as possible evidence of instability requiring testing for severity of instability (para 5–4*c*(3)(b)). In dealing with an unknown substance, several screening tests with a sample size much less than 50 g (770 grains) are performed to understand the behavior of the substance.

(b) Severity of instability. A 100 g (or 100cm^3) (1,540 grain (6.1 in^3)) sample is placed in one tube and the same quantity of reference substance is placed in the other. Thermocouples $T_1$and $T_2$are inserted into the tubes at half-height of the materials. If the thermocouples are not inert with respect to both the substance being tested and the reference substance, they must be enclosed in sheaths which are inert. Thermocouple $T_3$and the covered tubes are placed in the oven as shown in Figure 5–13. The temperature difference (if any) between test sample and reference is measured for 48 hours after the sample and reference substance reach 75°C. Unless an ignition or explosion occurs, the sample tube is removed, cooled in the desiccator and weighed. Evidence of decomposition of the sample is noted.

(4) Criteria and method of assessing results.

(a) Thermal instability. A test result is considered failing (positive (+)) if ignition or explosion occurs and passing (negative (-)) if no decomposition has occurred. Any decomposition other than minor surface discoloration from oxidation requires the second part of the test to be conducted.

(b) Severity of instability. The sample is considered thermally unstable (positive (+) response - failing) if a temperature difference (i.e., self-heating) of +3°C of the sample (for a minimum time of ten seconds) is recorded. If no ignition or explosion of self heating of 3°C or greater is recorded in the test, but self-heating of less than 3°C is noted, additional tests and/or evaluation may be required to determine thermal stability.

d. Small-scale burning test (UN Test 3(d) (i)).

(1) Introduction. A Small-Scale Burning Test is used to determine if small quantities of substances transition from deflagration to detonation when unconfined.

(2) Apparatus and materials. Figure 5–14 shows the kerosene-soaked sawdust bed and plastic beaker to hold the substance. Ignition of the sawdust bed is accomplished with an appropriate electric igniter.

(3) Procedure. One hundred and twenty-five grams (1930 grains) of the substance under test (liquid or solid) is placed in a 200 cm^3(12.2 in^3) plastic beaker which is compatible with the test substance. The contained sample is placed on the bed of kerosene-soaked sawdust and the sawdust is ignited with the appropriate electric igniter. Three samples should be tested.

(4) Criteria and method of assessing results. A test result is considered positive (+) if explosion or detonation occurs. The substance is judged to be too hazardous for transport (in the form in which it is tested) if any results are positive (+).

5–5. UN Test Series 4 (mandatory where appropriate)

These tests are conducted to answer the question "Is this article, packaged article or packaged substance too hazardous for transport?" The test series includes thermal stability and drop tests for products. The tests are carried out on the packaged substance, packaged article(s), and, if intended to be transported unpackaged, on the article itself. See note for paragraph 5–1*b*(3)(b) for guidance on when Test Series 4 is mandatory.

a. Thermal stability test for articles and packaged articles (UN Test 4(a)).

(1) Introduction. This test is designed to evaluate the thermal stability of articles and packaged articles when subjected to elevated thermal conditions to determine whether the unit being tested is too hazardous for transport. Several criteria are used to evaluate the results of the test. This test does not apply to packaged substances. The minimum size acceptable for this test is the smallest packaged unit.

(2) Apparatus and materials. This test requires an oven equipped with ventilation, explosion-proof electrical features and thermostatic control to maintain the temperature at 75 +/- 0.5°C. Figure 5–15 presents a suggested test configuration. It is desirable that the oven should have dual thermostats or similar protection against excessively high temperatures in the event of a thermostat malfunction. The oven must also be fitted with a temperature recorder to assess any exothermic temperature increase.

(3) Procedure. Depending on the unit being tested, a thermocouple is placed either on the outside casing of the unpackaged article or on the outside casing of an article which is located near the center of its package. The thermocouple is attached to a temperature recorder. The unit to be tested (together with the thermocouple) is placed in the oven, heated to 75°C and maintained at that temperature for 48 hours. The unit is then removed from the oven, cooled and inspected. In dealing with an unknown article, proper precautions should be taken in carrying out the test. Temperatures are recorded and the visual examinations noted.

(4) Criteria and method of assessing results.

(a) A test result is considered positive (+) if any of the following occurs:

1. It explodes.

2. It ignites.

3. It generates colored fumes or odor.

4. It experiences a temperature rise exceeding 3°C.

5. The outside casing of the article or the outside packaging is damaged.

(b) An article or packaged article(s) which gives a positive (+) test result is judged to be too hazardous for transport.

b. Steel tube drop test for liquids (UN Test 4(b) (i)).

(1) Introduction. This test determines the sensitivity to drop of a liquid substance. The test liquid substance is subjected to an impact upon a steel plate while encapsulated in a steel tube. The objective is to determine the maximum drop height at which there is no detonation.

(2) Apparatus and materials. The steel tube, shown in Figure 5–16, is filled with the liquid substance to be tested. The upper end of the tube is closed with a cast iron threaded pipe cap sealed with Teflon (PTFE) tape. A maximum of twenty units will be tested.

(3) Procedure. The liquid substance should be agitated for 10 seconds prior to the drop test. No more than one hour should elapse between the agitation and the test. The liquid substance is dropped in a vertical orientation onto the steel plate. The drop height should be varied by steps of 0.25 m (9.8 in) up to a maximum height of 5 m (197 in). The drop height is increased until the liquid substance detonates or the maximum height is reached. The following information is recorded:

(a) Name of liquid sample.

(b) Density of liquid sample.

(c) Temperature of liquid sample.

(d) Maximum drop height (m) tested at which there was no detonation.

(4) Criteria and method of assessing results.

(a) The phenomena observed should be categorized as follows:

1. Detontation with fragmentation;

2. A reaction causing the tube to burst;

3. No reaction with little damage to the tube;

4. Bursting of the tube.

(b) A test result is considered positive (+) and the liquid substance is considered unsuitable for transport in any form of packaging if a detonation occurs below 5 m (197 in) drop height.

(c) A test result is considered negative (-) and the liquid substance is suitable for transport in metal (or other material) containers if there is no reaction at the maximum drop height of 5 m (197 in).

(d) Transport of the liquid substance in metal packaging should be prohibited if there is a local reaction at 5 m (197 in) without detonation, unless suitability for transport can be demonstrated to the satisfaction of the DoD Hazard Classifiers and the DOT.

c. Twelve meter drop test for articles and solid substances (UN Test 4(b) (ii)).

(1) Introduction. This test determines whether a test unit (packaged substance or article) can withstand a free-fall impact without producing any fire or explosion hazard. It is not intended as a test to evaluate whether the package will withstand the impact.

(2) Apparatus and materials.

(a) Impact surface. The impact surface is a solid base, with a hard reasonably smooth surface. An example of such a surface is shown in Figure 5–17. The length and width of the surface should not be less than one and one-half times the dimension of the unit being tested.

(b) Other apparatus. Photographs or other visual recording devices should be used to verify impact attitude and results. Where impact attitude may be considered to be a significant factor, the test agency may use guidance devices to obtain the desired impact attitude. Such a device should not significantly restrain drop velocity, nor impede rebound after impact. In certain cases, some of the explosive articles in a package of articles under test may be replaced with inert articles. These inert articles should be of the same mass and volume as the explosive articles they replace.

(3) Procedure. The test unit is dropped from a height of 12 meters (40 ft) as measured from the lowest point of the test unit to the impact surface. A safe waiting period following impact prescribed by the test agency should be observed, even if no visible initiation or ignition occurs at impact. The test unit should then be further examined to determine if any ignition or initiation occurred. Data should include package description and observations indicated below. Recorded results should include photographs and recorded visual and audible evidence of initiation of ignition, time of occurrence (if any), and indication of severity of the results in terms such as mass detonation or deflagration. Attitude of test unit at impact should be recorded. Rupture of the package may be noted but does not affect the conclusion. Three drop tests are made on the packaged substance or article. However, each test unit is dropped only once.

(4) Criteria and method of assessing results. A test is considered positive (+) if a fire or explosion resulted from impact. Rupture of the package is not considered a positive result.

5–6. UN Test Series 5 (mandatory for Hazard Division 1.5)

These tests are conducted to answer the question "Is it a very insensitive explosive substance (with a mass explosion hazard); that is, does the behavior of the substance correspond closely to the criteria for Hazard Division 1.5?" The test series includes shock, thermal, fire and flame tests for substances. To be classified as Hazard Division 1.5 a substance must pass all Test Series 5 tests (5(a) Cap Sensitivity Test, 5(b) (ii) DDT Test, 5(c) External Fire Test for Hazard Division 1.5 and 5(d) Princess Incendiary Spark Test).

a. Cap sensitivity test (UN Test 5(a)).

(1) Introduction. The test is designed to determine the sensitivity of a substance to the shock from a standard detonator or blasting cap. The test yields quantitative and unambiguous results and can be used as one of the criteria in Test Series 5 to classify a very insensitive explosive substance in Hazard Division 1.5.

(2) Apparatus and materials. The experimental set up for the Cap Sensitivity Test consists of a cardboard tube filled with the substance. The substance is initiated with a standard detonator (fig 5–4) inserted coaxially in the top of the explosive in the tube to a depth equal to its length. Below the tube is the witness, which consists of either a steel witness plate (illustrated in fig 5–18) or, alternatively, a lead cylinder (illustrated in fig 5–19). The above apparatus is placed onto a square shaped steel plate.

(3) Procedure. The substance under test is filled into the tube in three equal increments. For free-flowing granular substances the tube is dropped from a height of 50 mm (2 in) after filling each increment. Gel-type substances are carefully hand-packed to eliminate voids. In all cases the final density of the explosive in the tube must be equal to or less than its shipping density. For special high-density cartridged explosives, the original cartridge is used instead of the hand-filled tube. Where such original cartridges are inconveniently large for testing, a portion of the cartridge not less than 160 mm (6.3 in) long may be cut off and used for testing. In such cases the detonator is inserted into the end in which the substance has not been disturbed by the action of cutting the cartridge. Those explosives whose cap sensitivity could be temperature dependent must be stored for at least 30 hours at a temperature of 28 - 30°C prior to testing. Explosives containing prilled ammonium nitrate, which have to be shipped in regions of high ambient temperatures must be temperature cycled as follows: 25°C — 40°C — 25°C— 40°C— 25°C prior to testing. The tube is placed onto the witness and steel base plate and the standard detonator inserted coaxially into the top of the explosive. The detonator is then fired from a safe position and the witness examined. The test is conducted three times on each sample or until detonation occurs, whichever occurs first.

(4) Criteria and method of assessing results. The substance is deemed to be "cap sensitive"(a positive (+) response) if in at least one trial—

(a) The lead cylinder is compressed from its initial length by an amount of 3.18 mm (1/8 in) or greater, or

(b) The witness plate shows a total penetration (dents, cracks or lappings in the witness plate do not show "cap sensitivity").

b. DDT test (UN Test 5(b) (ii)).

(1) Introduction. The Deflagration-to-Detonation Transition (DDT) Test is conducted to determine if the substance will easily transition from deflagration to detonation when confined. The test is similar to the Internal Ignition Tests (Test 1(b) (ii) and Test 2(b) (ii)) except that a 5 g (77 grain) igniter is used and a witness plate is used to record the occurrence of detonation.

(2) Apparatus and materials. The experimental arrangement is shown in Figure 5–20. The sample substance to be tested is contained in a steel pipe capped at one end with a forged steel pipe cap, and at the other with a "3000 lb" (13,000 N) mild steel witness plate which is welded to the pipe. An igniter consisting of black powder (100% passed through No. 20 sieve, 0.84 mm (0.033 in), and 100% retained by No. 50 sieve, 0.297 mm (0.0177 in)) is located at the center of the sample vessel. The igniter assembly consists of a cylindrical container which is made from 0.54 mm (0.021 in) thick cellulose acetate and is held together by two layers of nylon filament reinforced cellulose acetate tape. The igniter capsule contains a small loop formed from a 25.4 mm (1.0 in) length of nickel-chromium alloy resistance wire, 0.30 mm (0.012 in) in diameter having a resistance of 0.343 ohms. This loop is attached to two insulated tinned copper leading wires 0.66 mm (0.026 in) in diameter.The overall wire diameter including insulation is 1.27 mm (0.5 in). These lead wires are fed through small holes in the wall of the pipe and are sealed with epoxy resin.

(3) Procedure. After the sample, at 25°C, is loaded into the pipe to a height of 230 mm (9 in), the igniter (with its leads inserted through small holes in the pipe wall) is inserted into the center of the pipe and the leads pulled taut and sealed with epoxy resin. The remainder of the sample is then loaded, and the top cap screwed on. For gelatinous samples, the substance is packed as nearly as possible to its normal shipping density. For granular samples, the substance is loaded to the density obtained by repeated tapping of the pipe against a hard surface. The igniter is fired by a current of 15 amperes obtained from a 20-volt transformer. Three tests shall be performed on each sample. Three samples shall be tested.

(4) Criteria and method of assessing results. The criteria used in the interpretation of this test is that for a positive (+) result a hole should be blown through the witness plate.

c. External fire test for Hazard Division 1.5 (UN Test 5(c)).

(1) Introduction. This test is conducted to determine whether a substance can be classified as a Division 1.5 substance by subjecting it to an external fire test in its packaging.

(2) Apparatus and materials. Firewood or liquid fuel and a suitable support (such as a metal grid) to hold the package are required.

(3) Procedure.

(a) The test shall apply to a package (or packages) of explosive substance in the condition and form in which it is offered for transport. The total volume of the package (or packages) to be tested shall not be less than 0.15 m^3(5.3 ft^3), but the mass need not exceed 200 kg (440 lb) of explosive substance. The package (or packages) must be placed on an incombustible support (such as a metal grid) and exposed to an external fire large enough to engulf the bottom of the package. The flames must reach at least halfway up all sides of the package (or packages). If necessary, the packages may be encircled with a steel strip to support them during the test. The rate of heating must be credible in relation to what might occur in an accident during transportation, but it is not necessary to reproduce precisely all the conditions of a realistic fire. Suitable methods include a bonfire using brushwood, a crib fire using a lattice of wooden laths, a liquid fuel fire, a propane burner and a brazier. An acceptable method to produce a wood fire which has a balanced air/fuel ratio, thereby avoiding too much smoke which would obscure the events, and which burns with sufficient intensity and duration to bring many kinds of packaged explosives to reaction in 10 to 30 minutes is illustrated in Figure 5–21 and described below:

1. Pile air dried wood in the form of a lattice beneath the support grid.

2. Surround the package (or packages) with wood. Figure 5–21 shows a lattace arrangement. Other configurations are acceptable.

3. Saturate the wood with a suitable liquid fuel.

4. Ignite the pile simultaneously on two sides.

(b) A receptacle filled with liquid fuel or a combination of wood and liquid fuel may be used as alternatives to the stack of wood beneath and around the support grid. The surface area of the fuel receptable should be greater than that of the stack of wood on the support grid. The distance between the grid platform and the receptacle should be approximately 0.5 m (1.5 ft). Before using this method, consideration should be given to whether any quenching action or adverse interaction between explosives and fuel can occur such as might bring the results into question.

(4) Criteria and method of assessing results. A material which explodes (positive (+) result) in this test may not be classed as Hazard Division 1.5. An explosion is indicated by observations of events such as a loud noise and/or projections of fragments from the fire area.

d. Princess incendiary spark test (UN Test 5(d)).

(1) Introduction. This test is used to determine the ease of ignition of an explosive substance by incendiary sparks produced by a length of safety fuse. If a substance ignites in the test it must be assumed that it is not a very insensitive explosive substance.

(2) Apparatus and materials. The apparatus consists of a borosilicate test tube suitably clamped in a vertical position open end upwards. The fuse is a gunpowder filled time delay fuse, burning velocity 10 +/- 1 mm/sec (0.4. +/- 0.04 in/sec). (See fig 5–22.)

3. Procedure. The substance is normally tested in powder form. If necessary, it may be crushed and passed through an 850 μm (0.0335 in) sieve. Propellants are either ground and passed through a 1 mm (0.04 in) perforated plate sieve or discs 4 mm (0.16 in) diameter by 2 mm (0.08 in) thick are cut from the solid. Three grams (46 grains) of the substance under test are weighed into the test tube which is then gently tapped to flatten the surface of its contents. The fuse with one square cut end is placed with that end resting centrally on the surface of the sample. The other end is lit by suitable means. The event is observed visually and the response is recorded.

(4) Criteria and method of assessing results. A negative (-) result occurs if the substance fails to ignite on five consecutive trials with different samples for each trial. A positive (+) result occurs if the substance either ignites and burns (mildly or vigorously) or explodes at any time.

5–7. UN Test Series 6 (mandatory for Hazard Divisions 1.1, 1.2, 1.3 and 1.4)

These tests are conducted to answer the question "Which Hazard Division (1.1, 1.2, 1.3 and 1.4) corresponds most closely to the behavior of the product?" The test series includes internal ignition or initiation, propagation of burning or explosion, and fire tests of products. The geometrical arrangement of the products should be realistic in regard to the packing method and the conditions of transport and storage should be such as to produce the most disadvantageous test results. Note that airblast data collection, evaluation and interpretation; fragment collection, fragment hazard evaluation and interpretation; and thermal effects data collection, evaluation and interpretation guidelines are provided in Chapter 6. Note that testing can be curtailed if the product is expected to be Hazard Division 1.1 and the fragment hazard range does not exceed the default value (para 6–5*a*(3)(a)).

a. Single package test (UN Test 6(a)).

(1) Introduction. This test is conducted three times with single packages for the purpose of determining:

(a) Whether initiation or ignition in the package causes burning or explosion and whether burning or explosion is propagated within the package, and

(b) In what way the surroundings could be endangered by these effects.

Note. If reaction effects are expected to propagate outside the packaging, then the Single Package Tests (Test 6(a)) are not required. In this case, proceed directly to the Stack Tests (Test 6(b)).

(2) Apparatus and materials. A detonator or an igniter sufficient to ensure ignition of the substance or article to be tested is required, together with suitable confining materials. Figure 5–23 illustrates the use of a steel plate beneath the package which can be used to witness the event. Blast measuring equipment may be used. No other specific apparatus or materials are needed.

(3) Procedure.

(a) For packaged substances:

1. If the substance is intended to function by detonation, it is tested with a standard detonator (see fig 5–4).

2. If the substance is intended to function by deflagration, it is tested first with a standard detonator (see fig 5–4). If it doesn't detonate, then the subsequent two tests are conducted with an igniter sufficient (but not more than 30 g (460 grains) of fffg black powder or the same type and weight of igniter material designed to ignite the substance in the propulsion charges to achieve the deflagration function, whichever is the more energetic one) to ensure ignition of the substance within the package.

3. Substances not intended for use as explosives, but provisionally accepted into Class 1, are tested first with a standard detonator as in 1. above (three tests) and, if no explosion occurs, with an igniter as in 2. above (three tests).

(b) For packaged articles:*

1. Articles provided with their own means of initiation or ignition: The functioning of an article near the center of the package is stimulated by the article's own means of initiation or ignition. Where this is impractical, the article's own means of initiation or ignition is replaced by another form of device which provides similar input stimulus.

2. Articles not provided with their own means of initiation or ignition:

• An article near the center of the package is caused to function in the designed mode, or

• An article near the center of the package is replaced by another article which can be caused to function with the same effect.

Note. *Subject to the proviso that in the case of articles containing a very small quantity of substance(s) Compatibility Group A only, a sufficient number of these or equivalent items are initiated simultaneously to cause not less than 0.2 g (3 grains) of primary explosive to explode.

(c) The package is placed on a steel witness plate on the ground. The preferred method of confinement consists of containers, similar in shape and size to the test package, completely filled with earth or sand and placed as closely as possible around the test package to a minimum thickness of confinement in every direction of 0.5 m (1.5 ft) for a package not exceeding 0.15 m^3(5.3 ft^3) or 1 m (3 ft) for a package greater than 0.15 m^3(5.3 ft^3). Alternative methods of confinement are to use boxes or bags filled with earth or sand placed around and on top of the package or to use loose sand.

(d) Observations are made on the following: Evidence of thermal effects, detonation, deflagration or explosion of the total contents of the package.

(4) Criteria and method of assessing results.

(a) Explosion of the total contents indicates a candidate for Hazard Division 1.1. Evidence of such an indication includes:

1. A crater at the test site.

2. Damage to the witness plate beneath the package.

3. Measurement of a blast.

4. Disruption and scattering of most of the confining material.

(b) If the product is accepted as Hazard Division 1.1 and the fragment hazard range does not exceed the default value of 381 m (1250 ft) (para 6–5*a*(3)(a)), for example, fragments from Test 6(a) do not travel beyond 381 m, or they are asessed to be non-hazardous, further testing is not necessary, otherwise proceed to Test 6(b).

(c) If reaction effects are contained within the packaging then the Stack Tests (Test 6(b)) are not required. In this case, proceed to the External Fire (Bonfire) Test 6(c).

b. Stack test (UN Test 6 (b)).

(1) Introduction.

(a) This test is conducted three times with stacks of packages of an explosive product or stacks of non-packaged articles (if that is how they are transported/stored) for the purpose of determining:

1. Whether burning or explosion in the stack is propagated from one package to another or from one non-packaged article to another; and

2. In what way the surroundings could be endangered by this event.

(b) A variant of the stack test may be substituted for one of the three tests to characterize the fragment hazard for Hazard Division 1.1 ammunition. Method 1 (para 6–3*d*(1)) is the preferred replacement test series. Note that Method 1 consists of two tests with the stack raised off the ground, which employs ricochet barricades and the use of steel witness panels (fragment velocity/density) and collection bundles (fragment collection).

(2) Apparatus and materials. A detonator or an igniter just sufficient to ensure ignition of the substance or article to be tested is required, together with two or more samples of the product and suitable confining materials. A sheet, such as 3 mm (1/8 in) mild

steel, is required as a witness plate beneath the stack. Blast measuring and video equipment may be used. No other specific apparatus or materials are needed.

(3) Procedure.

(a) The test is applied to a stack of packages of an explosive product or a stack of non-packaged articles in the condition and form in which they are offered for transport. Sufficient packages or articles to give a total volume of 0.15 m^3(5.3 ft^3) are stacked on a steel witness plate on the ground. If the volume of an individual package (or non-packaged article) exceeds 0.15 m^3(5.3 ft^3) then the test is performed with at least one package or article (acceptor) placed in the position most likely to result in communication between the individual products (see para 5–7). If this position is not known, several acceptors are used. The preferred method of confinement consists of containers, similar in shape and size to the test packages completely filled with earth or sand and placed as closely as possible around the test package to create a minimum thickness of confinement in every direction of 1 m (3 ft). Alternative methods of confinement are to use boxes or bags filled with earth or sand placed around and on top of the stack or to use loose sand. If loose sand is used for confinement, the stack should be covered or protected to ensure that no sand falls into the interstices between adjacent packages or non-packaged articles. Articles carried without packaging are confined in a manner analogous to that used for packaged articles. Figure 5–24 presents a typical test arrangement.

(b) The decision to use either an initiating stimulus or an igniting stimulus is based on the following considerations:

1. For packaged substances:

• If the substance is intended to function by detonation, it is tested with a detonator (see fig 5–4).

• If the substance is intended to function by deflagration and the Test 6(a) series have not been conducted with the packaged substance, it is tested first with a standard detonator (see fig 5–4). If it doesn't detonate, then the subsequent two tests are conducted with an igniter as described below. If the substance is intended to function by deflagration and the Test 6(a) series have been conducted with the packaged substance, it is tested with an igniter just sufficient (but no more than 30 grams (460 grains) of fffg black power or of the same type and weight of igniter material designed to ignite the substance in the propulsion charges to achieve the deflagration function, (whichever is the more energetic one) to ensure ignition of the substance within one individual package.

• Substances not intended for use as explosives, but provisionally accepted into Class 1, are tested first with a detonator as above (three tests) and, if no explosion occurs, with an igniter as above (three tests).

2. For packaged articles and non-packaged articles:*

• Articles provided with their own means of initiation or ignition: The functioning of an article near the center of the package near the center of the stack is stimulated by the article's own means of initiation or ignition. Where this is impracticable, the article's own means of initiation or ignition is replaced by another form of stimulus having the required effect.

• Articles not provided with their own means of initiation or ignition:

•• An article near the center of the package near the center of the stack is caused to function in the designed mode, or

•• An article near the center of the package near the center of the stack is replaced by another article which can be caused to function with the same effect.

• The point of ignition or initiation is situated in a package near the center of the stack. Articles carried without packaging are tested in a manner analogous to that used for packaged articles

. • Observations are made on the following: Evidence of thermal effects, detonation and deflagration or explosion of the total contents of the packages.

Note. *Subject to the proviso that in the case of articles containing a very small quantity of substance(s) of Compatibility Group A only, a sufficient number of these or equivalent items are initiated simultaneously to cause not less than 0.2 g (3 grains) of primary explosive to explode.

(4) Criteria and method of assessing results. If in Test 6(b) explosion of virtually the entire contents occurs practically instantaneously, then the product is assigned to Hazard Division 1.1. Evidence of such an occurrence include:

(a) A crater at the test site appreciably larger than that given by a single package;

(b) Damage to the witness plate beneath the stack which is appreciably greater than that from a single package;

(c) Measurement of blast which significantly exceeds that from a single package;

(d) Violent disruption and scattering of most of the confining material.If the product is accepted as Hazard Division 1.1 and the fragment hazard range does not exceed the default value of 381 m (1250 ft) (para 6–5*a*(3)(a)), further testing is not required; otherwise proceed to Test 6(c).

Note. If two or less acceptor packages detonate in a confined stack test with four acceptor packages, then the packaged article can be hazard classified as Hazard Division 1.2; otherwise, it is hazard classified as Hazard Division 1.1.

c. External fire (bonfire) test (UN Test 6(c)).

(1) Introduction. This is a test on a stack of packages of an explosive product or a stack of articles (as configured for transport and storage) for the purpose of determining:

(a) How the packages or non-packaged articles in the stack behave when involved in an external fire; and

(b) Whether and in what way the surroundings are endangered by blast waves, thermal effects and/or fragment projection.

(2) Apparatus and materials. Firewood or liquid fuel is required and a suitable support (such as a metal grid) to hold the product together with three or more samples of the product and suitable means of ignition (for example sufficient liquid fuel to ensure ignition of a wood fire, 2 kg (4.5 lb) waste propellant, an electric igniter and a few grams of black powder). Three sheets, such as aluminum 200 x 200 x 0.2 cm (80 x 80 x 5/64 in), are required as witness screens together with suitable supports to hold them vertically. Regular video cameras are required to record events. Blast gauges, radiometers and associated recording equipment are also required.

(3) Procedure.

(a) The test is applied to a stack of packages of an explosive product or a stack of articles in the condition and form in which they are offered for transport. Where explosive articles are to be carried without packaging, the test is applied to the non-packaged articles. See paragraph 6–6 for alternate test procedures.

(b) Sufficient packages or articles to give a total volume, as packed, of not less than 0.15 m^3(5.3ft^3) or a minimum of three packages, whichever is the greater, are stacked together on a grid and exposed to external heating of sufficient intensity and duration as to bring the explosive substance contained in the packages or articles to reaction.

(c) The rate of heating should be credible in relation to what might occur in an accident during transportation, but it is not necessary to reproduce precisely all the conditions of a realistic fire. Suitable methods include a bonfire using brushwood, a wood fire using a lattice of wooden laths, a liquid fuel fire, a propane burner and a brazier.

(d) A proven method to produce a wood fire which has a balanced air/fuel ratio, thereby avoiding too much smoke which would obscure the events, and which burns with sufficient intensity and duration to bring many kinds of packaged explosives to reaction in 10 to 30 minutes is as follows: Air-dried pieces of wood (not more than 25-50 mm (1 in to 2 in) thick) are piled to form a lattice beneath the grid and around the stack of packages over a width of at least 50 cm (20 in) in every direction. The lateral distance between the laths should be about 10 cm (4 in). The whole should be drenched with suitable liquid fuel and the pile should be ignited on two sides simultaneously. Figure 5–25 shows the lattace arrangement. Other configurations are acceptable. It is recommended that enough fuel should be used to keep the fire burning for at least 30 minutes or for the time considered necessary.

(e) Test 6(c) is normally performed once; but, if the wood or

other fuel used for the fire is all consumed leaving a significant quantity of unconsumed explosive substance in the remains or in the vicinity of the hearth, then this test should be performed again using more fuel or a different method to increase the intensity and/or duration of the fire.

(f) The stack shall be supported with steel straps to retain this configuration during the test. It is usually necessary to place the stack of packages on a metal grid or scaffolding tubes between 0.5 m (1.5 ft) and 1 m (3 ft) above the ground to ensure adequate heating from below. Fuel is placed beneath the grid so that the fire engulfs the packages. Precautions against side winds must be observed to avoid dissipation of the heat. The test should not be performed under conditions when the wind speed exceeds 6 m/s (13 mph).

(g) A receptacle filled with a suitable liquid fuel or a combination of both wood and liquid fuel may be used as alternatives to the stack of wood beneath and around the grid. When liquid fuel is used, the surface area of the receptacle should be greater than that of the stack of wood on the grid. The distance between the grid platform and the receptacle is approximately 0.5 m (1.5 ft). Before using this method, consideration should be given to whether any quenching action or adverse interaction between explosives and fuel can occur such as might bring the results into question.

(h) A vertical witness screen, comprising an aluminum sheet 200 x 200 x 0.2 cm (80 x 80 x 5/64 in) or equivalent attached to suitable posts in the ground, is erected in each of three quadrants at a distance of 4m (13 ft) from the edge of the stack. The center of the screens should be raised to be level with the center of the packages if their center is above 1 m (3 ft). The downwind quadrant is not used for screens because prolonged exposure to flames may change the resistance of the aluminum sheets to projections.

(i) Observations are made on the following:

1. Evidence of detonation, deflagration or explosion of the total contents of the packages or non-packaged articles;

2. Potentially hazardous projections;

3. Thermal effects (for example, a fireball).

(4) Criteria and method of assessing results. The methodology used to determine the assignment of a Hazard Division based upon the results of Test Series 6 is illustrated in Figure 5–1 (Boxes 26, 28, 30, 32, 35 and 36). The following sections describe the assignment process.

(a) The article is classified as Hazard Division 1.1 if explosion of the total contents appears to occur instantaneously.

(b) The articles are classified as Hazard Division 1.2 if an explosion reaction (see Glossary) results in one or more of the following events:

Note. If two or less acceptor packages detonate in a confined stack test with four acceptor packages or more, then the packaged article can be hazard classified as Hazard Division 1.2; otherwise, it is hazard classified as Hazard Division 1.1.

1. Debris from the event perforates any of the three aluminum witness plates;

2. More than 10 metallic projections, each with mass exceeding 25 g (385 grains), are thrown more than 50 m (165 ft) from the edge of the stack;

3. Any metallic projection with mass exceeding 150 g (2300 grains) is thrown more than 15 m (50 ft) from the edge of the stack;

(c) The product, as packaged, is assigned to Hazard Division 1.3 if none of the events occurs which would require the product to be assigned to Hazard Divisions 1.1 or 1.2, but any one of the following events does occur:

1. A fireball which extends beyond any of the three witness screens;

2. A jet of flame which extends more than 3 m (10 ft) from the flames of the fire;

3. The irradiance of the burning product exceeds that of the fire by more than 4 kw/m^2(9.55×10^{-2}g-cal/cm^2-sec) at a distance of 15 m (50 ft) from the edge of the stack. The irradiance is measured over 5 seconds, during the period of maximum output. For substances, the value is corrected to correspond to a mass of 100 kg (220 lb) net explosive contents;

4. Fiery projections emanating from the product are thrown more than 15 m (50 ft) from the edge of the stack;

(d) The product, as packaged, is assigned to Hazard Division 1.4 and to a compatibility group other than Compatibility Group S if none of the events occurs which would require the product to be assigned to Hazard Divisions 1.1, 1.2 or 1.3, but any one of the following does occur:

1. Any indentation of any one of the three witness screens;

2. A projection, thermal effect or blast effect which would significantly hinder fire-fighting or other emergency response efforts in the immediate vicinity (i.e., 5 m (15 ft)) of the package;

(e) The product, as packaged, is assigned to Hazard Division 1.4 and to Compatibility Group S if none of the events occurs which would require the product to be assigned to Hazard Divisions 1.1, 1.2 or 1.3, or to Hazard Division 1.4 and a compatibility group other than Compatibility Group S, but a projection, thermal effect or blast effect occurs which would not significantly hinder fire-fighting or other emergency response efforts in the immediate vicinity (i.e., 5 m (15 ft)) of the package.

(f) If there are no explosive hazards at all, the product is considered for exclusion from Class 1. (Shown in Boxes 35 and 36 in figure 5–1.); however, evaluations of predominant hazard still applies (para 1–6).

1. If the product is an article manufactured with a view to producing a practical explosive or pyrotechnic effect, then:

• If there is some effect (projection, fire, smoke, heat or loud noise) external to the device itself,* the device is not excluded from Class 1 and the product, as packaged, is assigned to Division 1.4 and to Compatibility Group S;

• If there is no effect (projection, fire, smoke, heat or loud noise) external to the device itself,* the unpackaged device is excluded from Class 1 (see para 1–8).

Note. *Paragraph 1.11 of Chapter 1 of the UN Recommendations on the Transport of Dangerous Goods (App A, Ref 4) refers explicitly to the device, rather than the package, so it is usually necessary to make this assessment on the basis of a variant of Test 6(a) performed without packaging or confinement. Sometimes the stated effects are observed in Test 6(c) in which case the product is classified 1.4S without further tests.

2. If the product is not manufactured with a view to producing a practical explosive or pyrotechnic effect, it is excluded from Class 1. (Taken from para 1.11(c) of ST/SG/AC.10/1 (App A, Ref 4).

(g) See Chapter 6 for guidance on fragment collections, evaluations, and interpretations of airblast, thermal and fragment data.

5–8. UN Test Series 7 (mandatory for Hazard Division 1.6)

These tests are conducted to answer the question "Is the product an extremely insensitive explosive article; that is, does the behavior of the substance correspond closely to the criteria for Hazard Division 1.6?" There is only one compatibility group applicable for this hazard division, Compatibility Group N, which signifies that the product only contains extremely insensitive detonating substances (EIDS). The test series contains seven substance tests and four article tests. To be classified as EIDS, a substance must pass (negative (-) response)) all substance tests in Test Series 3 (3(a) (I)—Bureau of Explosives Impact Machine, 3(b)(iii)—ABL Friction Test, 3(c)—Thermal Stability Test at 75° C, and 3(d)(i)—Small-Scale Burning Test and Test Series 7 (7(a)— EDS Cap Test, 7(b)—EIDS Gap Test, 7(c) (i) Susan Test, 7(d) (i)— EIDS Bullet Impact Test, 7(e)—EIDS External Fire Test, and 7(f)— EIDS Slow Cookoff. Note that the Friability Test (7(c) (ii) and 7(d) (ii)) is an alternate test for the Susan Test and the EIDS Bullet Impact Test. To be classified as Hazard Division 1.6, an article must contain only EIDS and pass all Test Series 7 article tests (7(g)—1.6 Article External Fire Test, 7(h) — 1.6 Article Slow Cookoff Test, 7(j)—1.6 Article Bullet Impact Test, and 7(k)—1.6 Article Propagation Test.

a. EIDS cap test (UN Test 7(a)).

(1) Introduction. This test is designed to determine the sensitivity

of an EIDS candidate to the shock from a detonator or blasting cap. The test yields quantitative and unambiguous results.

(2) Apparatus and materials. The experimental set-up for this test is the same as for Test 5(a) (see figs 5–18 and 5–19).

(3) Procedure. The experimental procedure is the same as for Test 5(a) (see para 5–6*a*(3)).

(4) Criteria and method of assessing results. An explosive substance which detonates is too sensitive to be classified as an EIDS and the result is noted as positive (+).

b. EIDS gap test (UN Test 7(b)).

(1) Introduction. This test is used to measure the sensitivity of an EIDS candidate to a specified shock level, i.e., specified donor charge and gap.

(2) Apparatus and materials. The test consists of a 1.077 kg (2.376 lb) explosive charge (donor), a plexiglass barrier (gap), a container holding the potential EIDS (acceptor) and a steel witness plate (target). Figure 5–26 illustrates the test arrangement.

(3) Procedure.

(a) The standard detonator, donor, gap and acceptor charge are coaxially aligned above the center of the witness plate. A 1.6 mm (1/16 in) air gap is maintained between the free end of the acceptor charge and the witness plate with suitable spacers which do not overlap the acceptor charge. Care should be taken to assure good contact between the detonator and donor, donor and gap, and gap and acceptor charge. The test sample and a booster are to be at a temperature of 25°C +/−5°C at the time of the test.

(b) To assist in collecting the remains of the witness plate the whole assembly may be mounted over a container of water with at least a 100 mm (4 in) air gap between the surface of the water and the bottom surface of the witness plate which should be supported along two edges only.

(c) Alternative collection methods may be used, but it is important to allow sufficient free space below the witness plate so as not to impede plate puncture. The test is repeated three times.

(4) Criteria and method of assessing results. A clean hole punched through the plate indicates that a detonation was initiated in the sample. A substance which detonates in any trial is not an EIDS and the result is noted as positive (+).

c. Susan impact test (UN Test 7(c) (i)).

(1) Introduction. The Susan Impact Test is designed to assess the degree of explosive reaction under conditions of high velocity impact. The test is conducted by loading the explosives into standardized projectiles and firing the projectiles against a target at specified velocity.

(2) Apparatus and materials.

(a) The Susan test configuration is shown in Figure 5–27. The substance samples are contained in the projectile shown in Figure 5–28. The projectile contains a solid substance sample which is fabricated by normal techniques. The projectile has an assembled weight of 5.4 kg (12 lb), and contains approximately 0.45 kg (1 lb) of explosive.

(b) The projectiles are fired from a smoothbore gun at a smooth-surfaced target plate. Projectile impact velocity is obtained by adjusting the propellant charges in the gun. The flight path is about 1.2 m (4 ft) above ground level.

(c) The test site is equipped with calibrated blast gauges and recording equipment. The airblast recording system should have a system frequency response of at least 20 KHz. Measurements are made of impact velocities and air shock blast overpressure. Airblast is measured at a distance of 3.05 m (10 ft) from the impact point (gauges 1, 2 and 3 in fig 5–27). The gauges are positioned to take free-field overpressure measurements.

(3) Procedure.

(a) The propellant charge in the gun should be adjusted to produce a projectile velocity of 333 m/sec (1093 ft/sec) within a range of (+10%, −0%). The projectile is fired and the impact velocity and airblast produced as a result of its reaction on impact are recorded. If a velocity of 333 m/sec (1093 ft/sec) (+10%, −0%) is not obtained, the amount of propellant is adjusted and the test repeated.

(b) Once an impact velocity of 333 m/sec (1093 ft/sec) is obtained, the test is repeated until accurate pressure-time records are obtained from at least five separate shots. On each of these accurate shots, the impact velocity must be 333 m/sec (1093 ft/sec) (+10%, −0%).

(4) Criteria and method of assessing results. The maximum airblast overpressure that is determined from each airblast is recorded. A minimum of 10 records is necessary for a valid average. The average of the maximum pressures obtained is recorded. If the average pressure obtained by such a procedure is greater than or equal to 27 kPa (3.9 psi) (i.e., the blast overpressure that a like mass of cast TNT would produce at a velocity of 333 m/sec (1093 ft/sec)), then the substance is not an EIDS explosive and the result is noted as positive (+).

d. Friability test (UN Tests 7(c) (ii) and 7(d) (ii)).

(1) Introduction. The Friability Test is used to establish the tendency of a compact EIDS candidate to deteriorate dangerously under the effect of an impact.

(2) Apparatus and materials.

(a) The following is required to conduct the Friability test:

1. A device which can fire a cylindrical test sample at a velocity of 150 m/sec (492 ft/sec);

2. A steel impact plate (target);

3. A fragment recovery box;

4. A cylindrical test sample (illustrated in fig 5–29);

5. A closed vessel.

(b) Diagrams of the test setup are provided in Figures 5–29 through 5–31.

(3) Procedure. A bare sample (about 9g (140 grains)) of compact substance is projected at 150 m/sec (492 ft/sec) against the steel plate. The substance fragments produced by impacting the steel plate are collected (minimum 8.9 g (137 grains)). These collected fragments are loaded into a closed vessel at 20°C and ignited with a capsule containing 0.5 g (7.7 grains) of fffg black powder (average diameter 0.75 mm (0.03 in)). The pressure as a function of time produced by the burning substance is recorded using an appropriate pressure recording device. The data are analyzed to produce a plot of pressure derivative dp/dt as a function of pressure p (dp/dt = f(p)). Three tests are conducted.

(4) Criteria and method of assessing results. The substance is not an EIDS if the average maximum dp/dt is 15 MPa/ms (150 bars/ms) (positive (+) result) or greater.

e. EIDS bullet impact test (UN Test 7 (d) (i)).

(1) Introduction. The Bullet Impact Test is used to evaluate the response of a possible EIDS explosive substance to the kinetic energy transfer associated with impact and penetration of a given energy source (a 12.7 mm (0.5 in) projectile traveling at a specified velocity)).

(2) Apparatus and materials.

(a) Substance test samples fabricated by normal techniques are employed. The samples should have a length of 200 mm (7 7/8 in) and should be configured to fit snugly inside the device shown in Figure 5–32. The pipe is closed with steel or cast iron end caps, torqued to 204 Nm (150 ft-lb).

(b) The bullet is a standard 12.7 mm (0.50 in) armor-piercing bullet with a projectile mass of 46 g (710 grains), and is fired at the service velocity of about 820 +/- 60 m/sec (2700 +/- 200 ft/sec) from a 12.7 mm (0.5 in) gun. Figure 5–33 presents a typical test arrangement for the test.

(3) Procedure.

(a) A minimum of six test articles (explosive substance in capped steel pipe) should be fabricated for the tests.

(b) Each test article is positioned on a suitable pedestal at a convenient distance from the muzzle of the gun. Each test article is secured in a holding device upon its pedestal. This device should be capable of restraining the item against dislodgment by the bullet.

(c) A test consists of the firing of one projectile into each test item. There should be at least three tests with the test article oriented such that its long axis is perpendicular to the line of flight (i.e., impact through the side of the pipe). There should also be at least three tests with the test article oriented such that its long axis

is parallel to the line of flight (i.e., the impact will be through the end cap).

(d) Remains of the test container are collected. Complete fragmentation of the container is indicative of explosion or detonation.

(4) Criteria and method of assessing results. A substance which explodes or detonates in any trial is not an EIDS explosive and the result is noted as positive (+).

f. EIDS external fire test (UN Test 7 (e)).

(1) Introduction. The External Fire Test is used to determine the reaction of an EIDS candidate explosive to external fire when it is confined.

(2) Apparatus and materials. Substance test samples fabricated by normal techniques are employed. The samples should have a length of 200 mm (7 7/8 in) and should be configured to fit snugly inside the device shown in Figure 5–32. The pipe is closed with steel or cast iron end caps, torqued to 204 Nm (150 ft-lb). The test arrangement is identical to that of Test 6(c) (see para 5–7*c*(2) and fig 5–25).

(3) Procedure.

(a) The experimental procedure is the same as for Test 6(c) (see para 5–7*c*(3)) except as noted in paragraph 5–8*f*(3)(b) below.

(b) For substances, this test requires a minimum of five confined samples stacked horizontally and banded together. The test is conducted either on fifteen samples in one fire or on five samples in each of three fires. Color photographs are taken to document the condition of the samples after each test. Cratering and the size and location of confining pipe fragments are documented as an indication of the degree of reaction.

(4) Criteria and method of assessing results. An explosive substance which detonates or reacts violently with a fragment of mass exceeding 1 g (15 grains) and range more than 15 m (50 ft) is not an EIDS explosive substance and the result is noted as positive (+).

g. EIDS slow cookoff test (UN Test 7(f)).

(1) Introduction. This is a test on a possible EIDS explosive substance. It is used to determine reaction to a gradually increasing thermal environment and the temperature at which such reaction occurs.

(2) Apparatus and materials.

(a) Substance test samples fabricated by normal techniques are employed. The samples should have a length of 200 mm (7 7/8 in) and should be configured to fit snugly inside the device shown in Figure 5–32. The pipe is closed with steel or cast iron end caps, torqued to 204 Nm (150 ft-lb).

(b) The sample assembly is placed in an oven which provides a controlled thermal environment over a 40°C to 365°C temperature range and can increase the temperature of the surrounding oven atmosphere at the linear rate of 3.3°C per hour throughout the temperature operating range and ensure, by circulation or other means, a uniform thermal environment to the item under test. A means of relief should be provided for increased air pressure that is generated in the oven due to heating. A typical test arrangement is given in Figure 5–34.

(c) Temperature recording devices are used to monitor temperature at intervals of every 10 minutes (or less); continuous monitoring is preferred. Instrumentation with an accuracy of +/- 2% over the test temperature range is used to measure the temperature of:

1. The air within the oven; and

2. The exterior surface of the steel pipe.

(3) Procedure.

(a) The test item is subjected to a gradually increasing air temperature at a linear rate of 3.3°C per hour until reaction occurs. Temperatures and elapsed test time are measured and recorded.

(b) Color photographs are taken to document the condition of the unit and the test equipment before and after the test. Cratering and the size and location of any fragments are also documented as indications of the degree of reaction.

(c) Three tests are conducted for each candidate substance.

(4) Criteria and method of assessing results. After the completion of each test, the pipe or any fragments of pipe are recovered in the test area and examined for evidence of violent explosive reaction. Such evidence may include data on the number and size of recovered fragments of explosive or pipe, as well as the distances to which they were thrown. A substance which detonates or reacts violently (fragmentation of one or two end caps and fragmentation of the tube into more than three pieces) is not considered an EIDS and the result is noted as positive (+).

h. The 1.6 article external fire test (UN Test 7(g)).

(1) Introduction. The external fire test is used to determine the reaction of a possible Hazard Division 1.6 article to external fire as presented for transport.

(2) Apparatus and materials. The experimental set-up for this test is the same as for Test 6(c) (see para 5–7*c*(2) and fig 5–25)).

(3) Procedure. The experimental procedure for this test is the same as for Test 6(c) (see para 5–7*c*(3)).

(4) Criteria and method of assessing results. For assessing results use the criteria as for Test 6(c), paragraphs 5–7*c*(4)(b) - 5–7*c*(4)(d). If none of the events which would require the article to be confined to Hazard Divisions 1.1, 1.2 or 1.3 occur, then the article can be considered as a Division 1.6 article, and the result is noted as negative (-). See Chapter 6 for collection, evaluations and interpretations of airblast, thermal and fragment data.

i. 1.6 article slow cookoff test (UN Test 7(h)).

(1) Introduction. The 1.6 Article Slow Cookoff is a test on a possible Hazard Division 1.6 article. It is used to determine reaction to a gradually increasing thermal environment and the temperature at which such reaction occurs.

(2) Apparatus and materials.

(a) The test equipment consists of an oven which provides a controlled thermal environment over a 40°C to 365°C temperature range and can increase the temperature of the surrounding oven atmosphere at the linear rate of 3.3°C per hour throughout the temperature operating range, minimize hot spots, and ensure (by circulation or other means) a uniform thermal environment to the item under test. Secondary reactions (such as those caused by exudate and explosive gases contacting the heating devices) invalidate the test, but these can be avoided by providing a sealed inner container to surround articles shipped bare. A means of relief should be provided for the increased air pressure that is generated by the test due to heating. A typical test arrangement is shown schematically in Figure 5–34.

(b) Temperature recording devices (permanent record types) are used to monitor temperature continuously or at least every 10 minutes. Instrumentation with an accuracy of +/-2% over the test temperature range is used to measure the temperature at:

1. The atmosphere air gap adjacent to the unit under test; and

2. The exterior surface of the unit.

(3) Procedure.

(a) The test item is subjected to a gradually increasing air temperature at a linear rate of 3.3°C per hour until reaction occurs. Temperatures and elapsed test time are measured and recorded.

(b) Color still photographs are taken to document the condition of the unit and the test equipment before and after the test. Cratering and fragment size are documented as an indication of the degree of reaction.

(c) The test is conducted on two separate articles as presented for transport.

(4) Criteria and method of assessing results. If there is a reaction more severe than burning, the result is noted as positive (+) and the item is not classified as Hazard Division 1.6. The energetic material may ignite and burn and the case may melt or weaken sufficiently to allow mild release of the combustion gases. Burning should be such that case debris and package elements stay in the area of test except for case closures which may be dislodged by the internal pressure and thrown not more than 15 meters (50 ft).

j. 1.6 article bullet impact test (UN Test 7(j)).

(1) Introduction. The Bullet Impact Test is used to evaluate the response of a possible Hazard Division 1.6 article to the kinetic energy transfer associated with the impact and penetration by a given energy source.

(2) Apparatus and materials. A 12.7 mm (0.5 in) gun is used to fire service 12.7 mm (0.5 in) armor-piercing (AP) ammunition with

a projectile mass of 46 g (710 grains) and with standard propellant load. The gun should be fired by remote control and be protected from fragment damage by firing through a hole in a heavy steel plate. The firing gun muzzle should be at a range of 3 - 20 m (10-65 ft) from the test item depending upon the explosive weight of the item. The test item should be secured in a holding device capable of restraining the item against dislodgment by projectiles. The test is recorded visually with video or cine equipment. Figure 5–35 presents a typical test arrangement.

(3) Procedure. The test consists of subjecting an all-up (complete) EIDS loaded item to a three-round burst fired at 856 +/- 9 m/sec (2800 +/- 30 ft/sec) velocity with an equivalent 600 +/- 50 rounds/min rate of fire and impacting within a circular target area of 50 mm (2 in) diameter. The rounds are aimed so as not to pass through the same hole. The test is repeated in three different orientations. In the appropriate orientation(s) the striking point on the test item for the multiple impact is selected so that the impacting rounds penetrate the most sensitive material(s), that is not separated from the main explosive charge by barriers or other safety devices. The degree of reaction is determined by post-test inspection of test film and hardware.

(4) Criteria and method of assessing results. For an item to be considered as a Hazard Division 1.6 article, there should have been no detonation (or explosion) resulting from any of the tests. Reactions of the article identified as no reaction, burning, or deflagration are considered as negative (-) test results.

k. 1.6 article propagation test (UN Test 7(k)).

(1) Introduction. The Propagation Test is used to determine if a possible Hazard Division 1.6 article will detonate a similar item adjacent to it, in the condition as presented for transport and or storage.

(2) Apparatus and materials. Two or more of the articles to be tested are required, one of which should be provided with their normal means of initiation. Where the article is not fitted with its own means of initiation or its own means of initiation cannot be functioned practicably then a stimulus of similar power should be provided. Video or cine equipment should be used to record the test visually. No other specific apparatus or materials are needed although blast measuring equipment may also be used.

(3) Procedure.

(a) The test is applied to an array of articles in the condition and form in which they are offered for transport and or storage. Where explosive articles are to be carried without packaging, the tests are applied to the non-packaged articles. The test is performed with at least one acceptor placed in the position most likely to result in communication between the articles. If this position is not known several acceptors are used.

(b) If the article is provided with its own means of initiation then the donor article should be functioned by its own initiation system. Where this is impracticable the article's own means of initiation is replaced by another form of stimulus having the required effect. If the article is not provided with its own means of initiation then it should be caused to function in its designed mode.

(c) The test is to be conducted at least three times, unless a detonation of an acceptor occurs earlier. The first test is conducted without confinement and the next two tests are conducted with confinement as with Test 6(b). See paragraph 5–7*b*(3) and Figure 5–24 for additional discussions on procedures and for a typical test arrangement, respectively. The unconfined test permits the collection of airblast/fragment data without the attenuating effects of confinement, whereas the confined test subjects the acceptors to a more severe environment. Record the size and location of any fragments produced by each test.

(4) Criteria and method of assessing results. Fragment data (size and number of acceptor article fragments) and crater dimensions (and/or witness plate damage) are used to determine whether or not any acceptor detonated. Blast data and the video or cine records of each test may be used to supplement this decision. For an item to be considered as a Hazard Division 1.6 article, it should have demonstrated no propagation (detonation of an acceptor) as a result of this test. Acceptor article responses identified as no reaction, burning or deflagration are considered as negative (-) results. See Chapter 6 for guidance on fragment collection, evaluation and interpretations of airblast, thermal and fragment data.

5–9. Additional test

Flash point (ASTM D56–87).

a. Introduction. A summary of the ASTM test used to determine the flash point of liquid substances is provided in this section. The flash point measures the tendency of the substance to form a flammable mixture with air under controlled laboratory conditions. This test should be run remotely for materials suspected to be explosive. Variations on this test method should be examined to determine vapor flammability characteristic of the sample material and the explosive hazard including testing in an open cup (see App A, Ref 9).

b. Apparatus and materials. A Tag Closed Tester, (App A, Ref 9) illustrated in Figure 5–36, is used to conduct the test. The liquid substance to be tested is contained in a 50 +/- 0.5 ml (3 +/- 0.03 in^3) container. The standard brass cup may be replaced with a compatible test container.

c. Procedure. Condition the substance sample at 27 +/- 5°C or 11°C below the predicted flash point, whichever is lower. Heat the substance using the sample heater either at 1°C/min for substances having a flash point below 60°C or 3°C/min for substances having a flash point above 60°C. When the sample is 5°C below the expected flash point, introduce the test flame into the apparatus vapor space for one second in a smooth motion. Repeat introduction of the test flame after each 1°C rise in sample temperature until there is a distinct flash in the vapor space or an explosion occurs. Do not confuse the true flash with the bluish halo which sometimes surrounds the test flame during applications immediately preceding the true flash.

d. Criteria and method of assessing results. The temperature (less than or equal to 95°C) at which there is a true flash in the test apparatus vapor space will be recorded as the flash point for the substance. A flash point less than or equal to 95°C is considered a positive (+) response (failure)

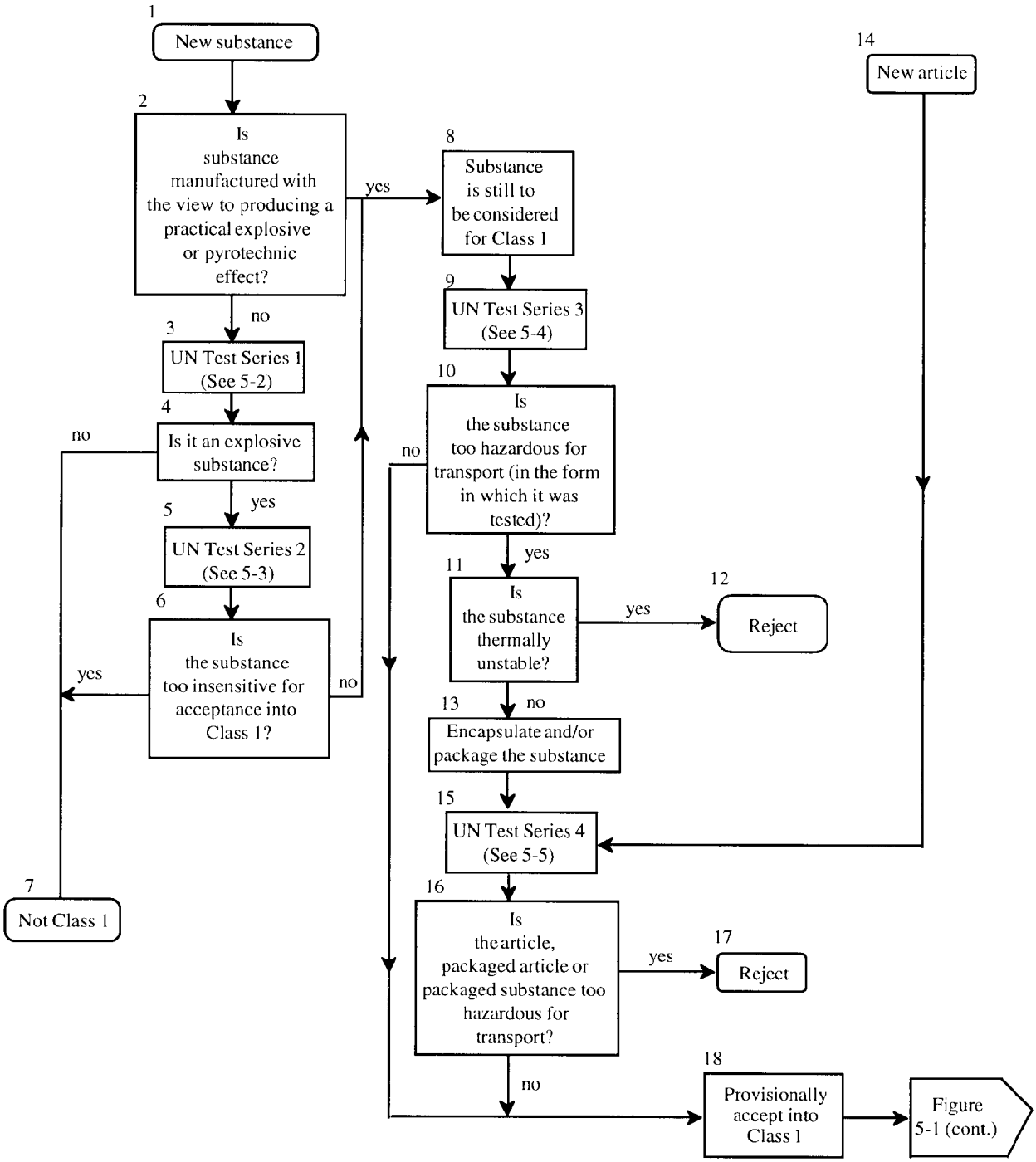

See Paragraph 5-1.*b*.

Figure 5-1. UN hazard classification procedures for articles and substances

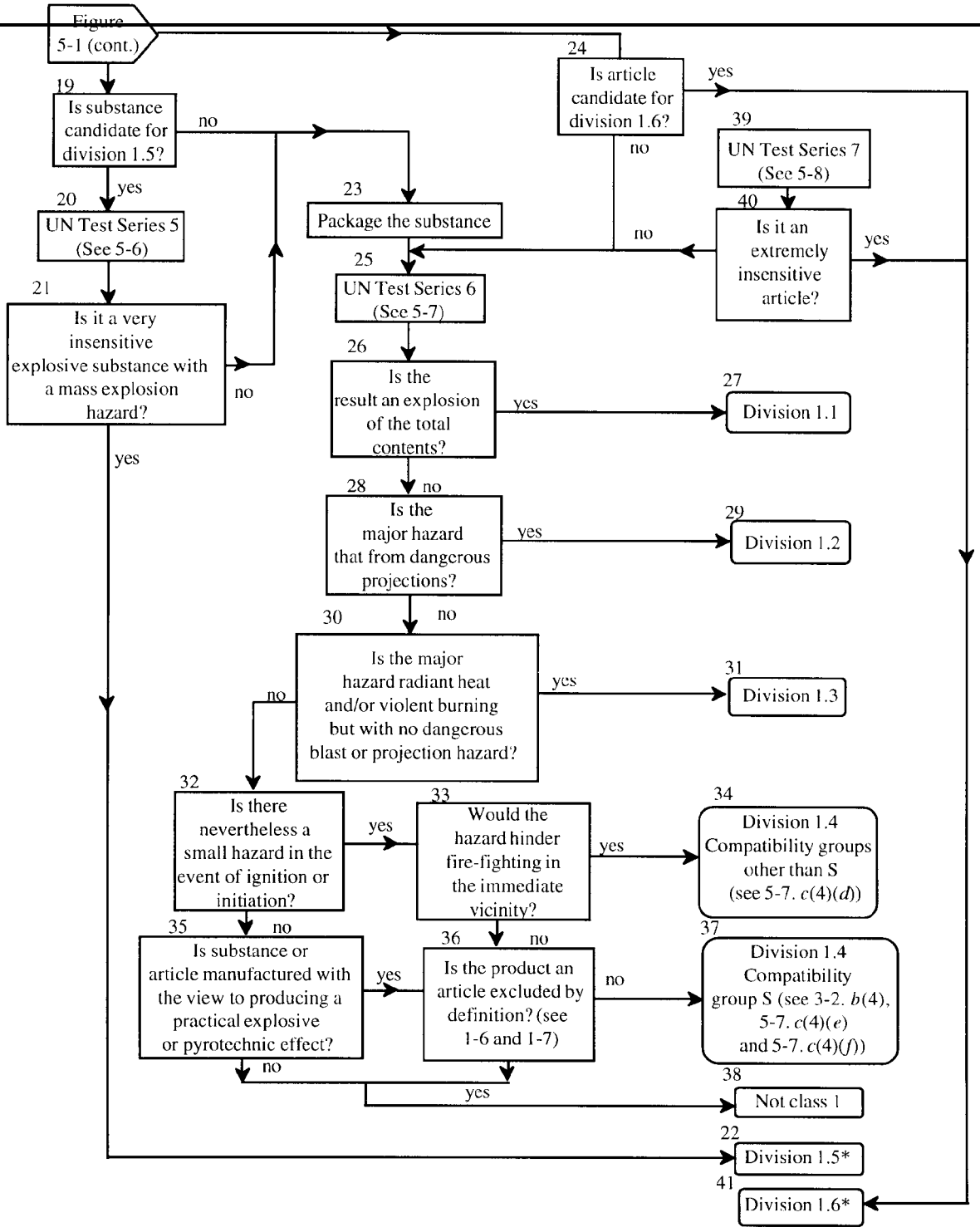

*Hazard Division 1.6 articles contain extremely insensitive detonating substances (EIDS) which pass the substance tests in Test Series 7. If an EIDS is to be shipped separately as Hazard Division 1.5, then the EIDS must pass Test Series 5.
See Paragraph 5-1.*b*.

Figure 5-1A. UN hazard classification procedures for articles. and substances (cont.)

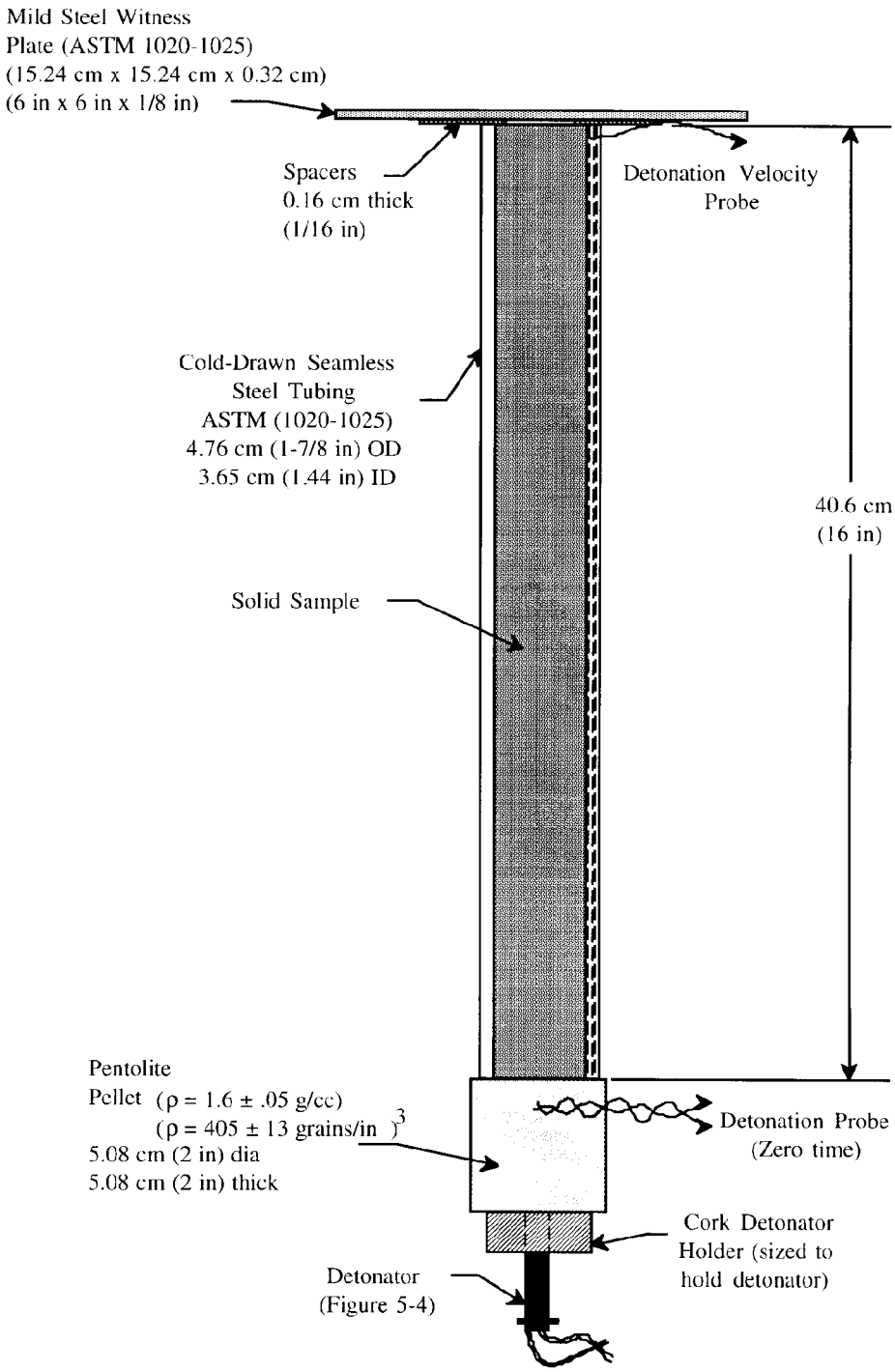

NOT TO SCALE

See Paragaph 5-2.*a*.

Figure 5-2. Gap test configuration for solid substances - UN Test 1(a) (iii)

Figure 5-2. Gap test configuration for solid —UN Test 1(a) (iii)

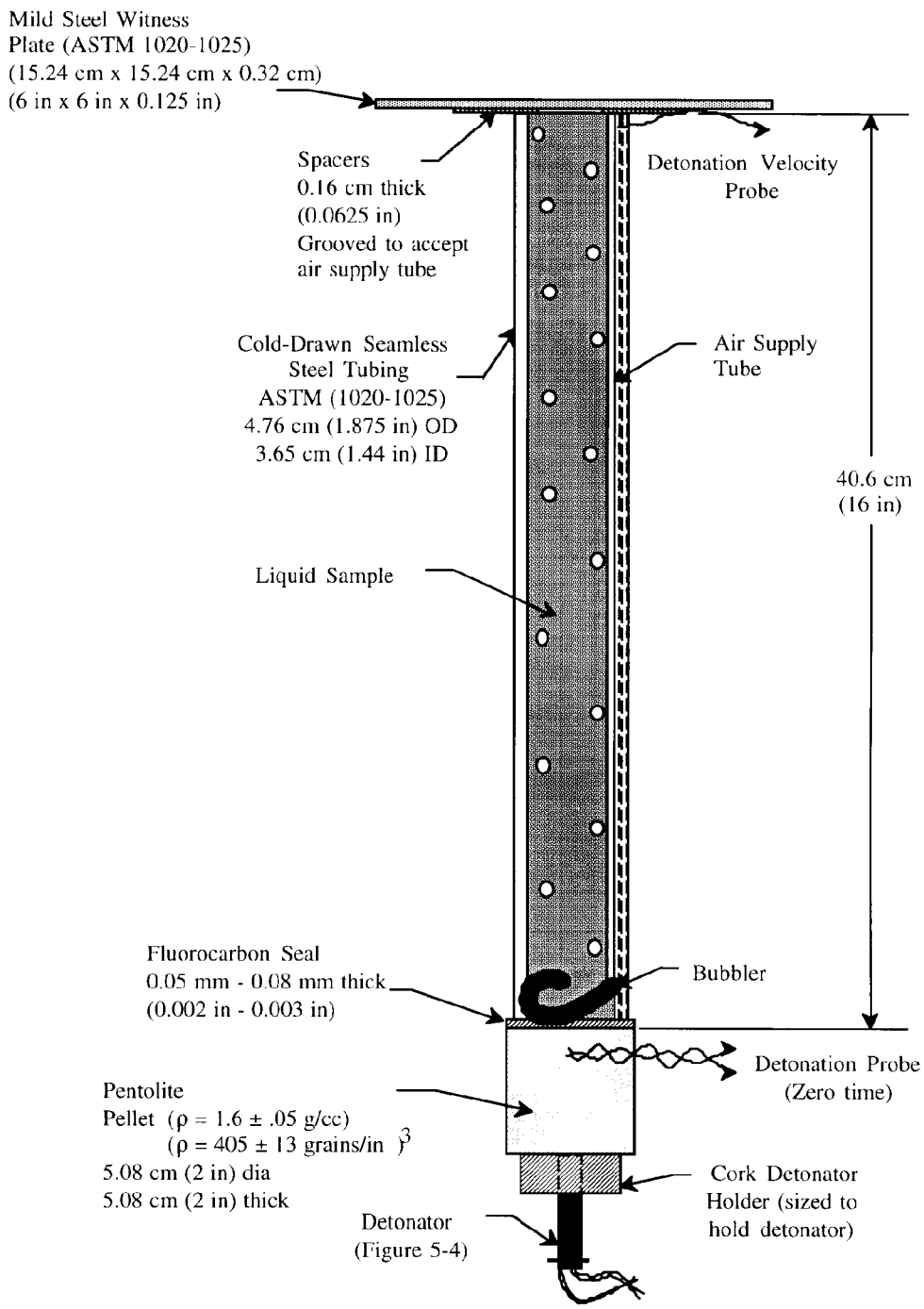

NOT TO SCALE

See Paragraph 5-2.*a*.

Figure 5-3. Gap test configuration for liquid substances—UN Test 1(a) (iii)

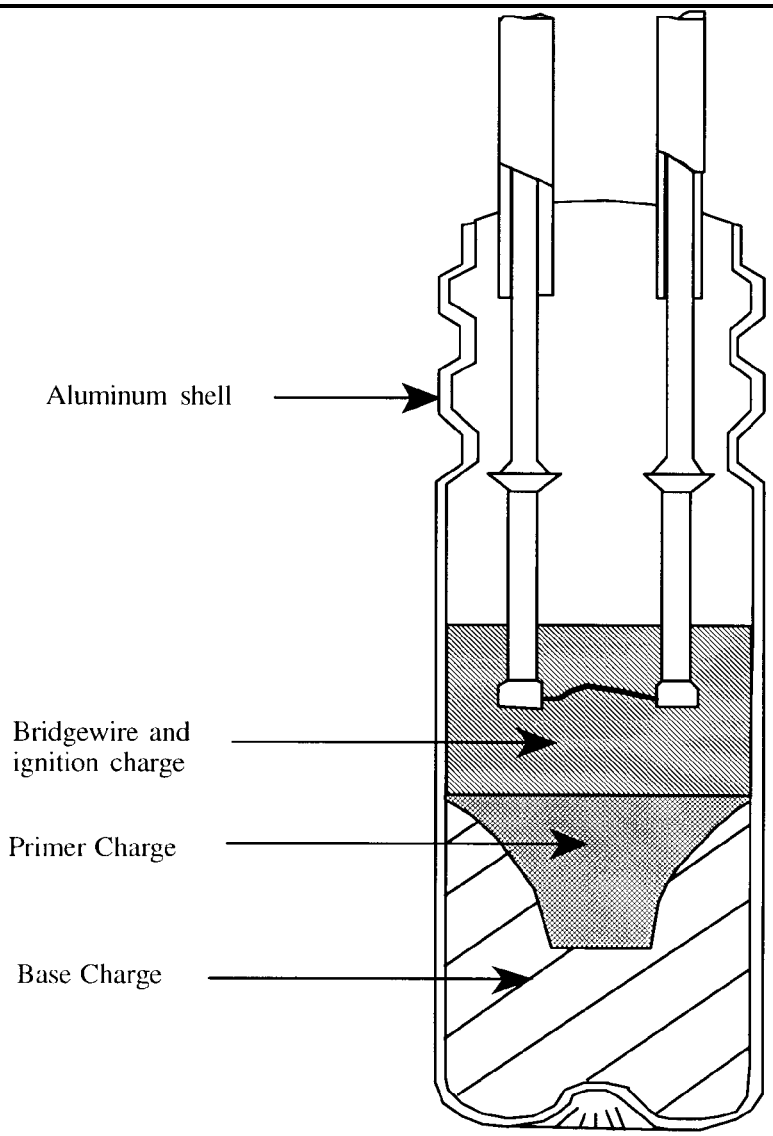

Specifications -
Shell:

Material -	5052 Aluminum Alloy
Length -	31.8 mm (1.25 in)
Diameter -	7.06 mm (9/32 in)
Wall Thickness -	0.19 mm (0.0075 in)

Primer Charge: 0.195g (3 grains) dextrinated lead azide
Base Charge: 0.447 ± 0.019g (6.90 ± 0.29 grains) PETN pressed at 29 Mpa (280 Bars)

NOT TO SCALE

Notes: Non-electric/electric number eight detonator or equivalent energy output may be used. See Figures 5-2, 5-3, 5-7, 5-8, 5-18, 5-19, 5-26 and 6-10.

Figure 5-4. Number eight (USA) detonator

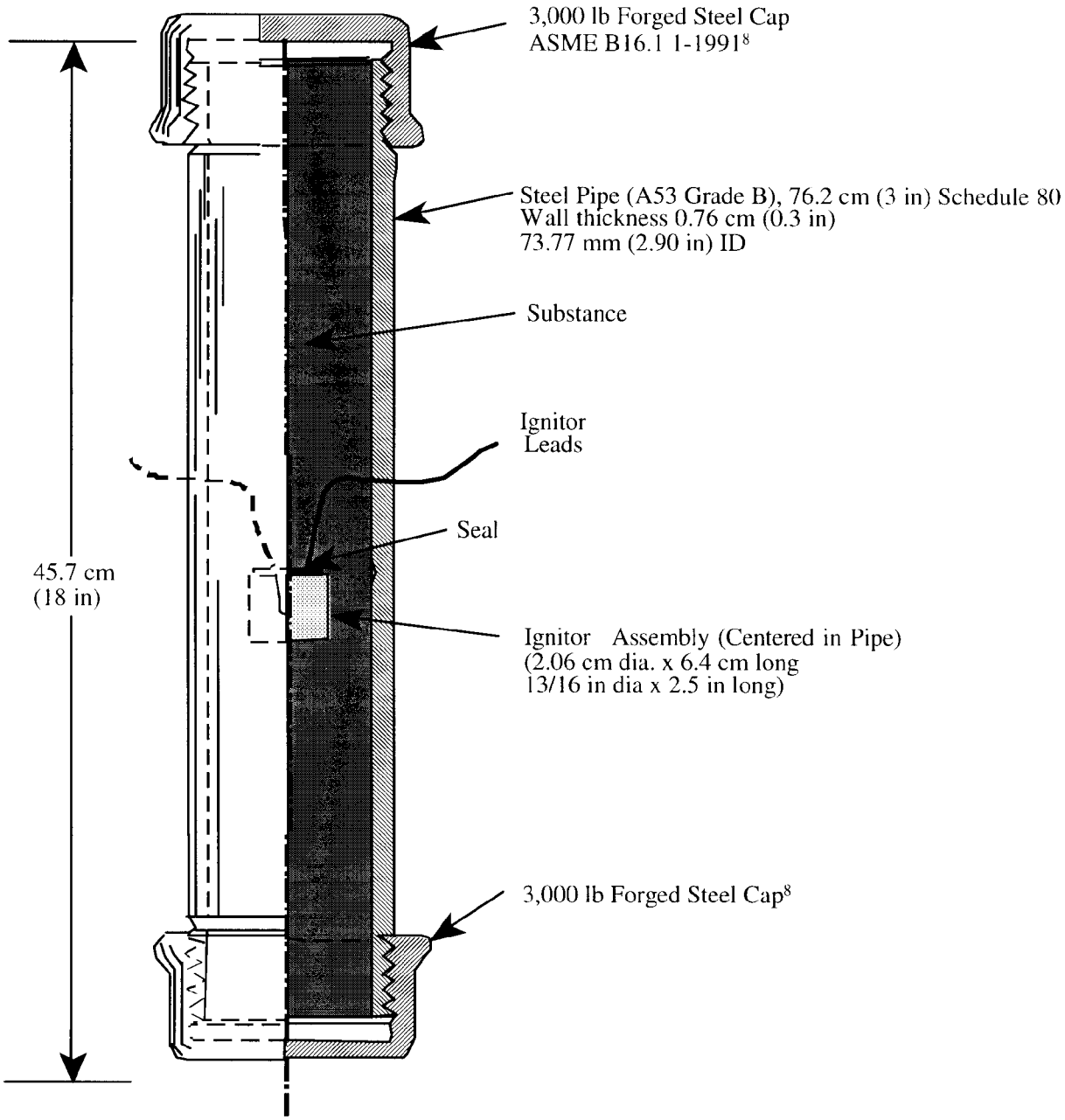

NOT TO SCALE

[8]ASME B16.11-1991, "Forged Fittings, Socket-Welding and Threaded," American Society of Mechanical Engineers, New York, NY (latest revision).

See Paragraph 5-2.*b*.

Figure 5-5. Internal ignition test—UN Tests 1(b) (ii) and 2(b) (ii)

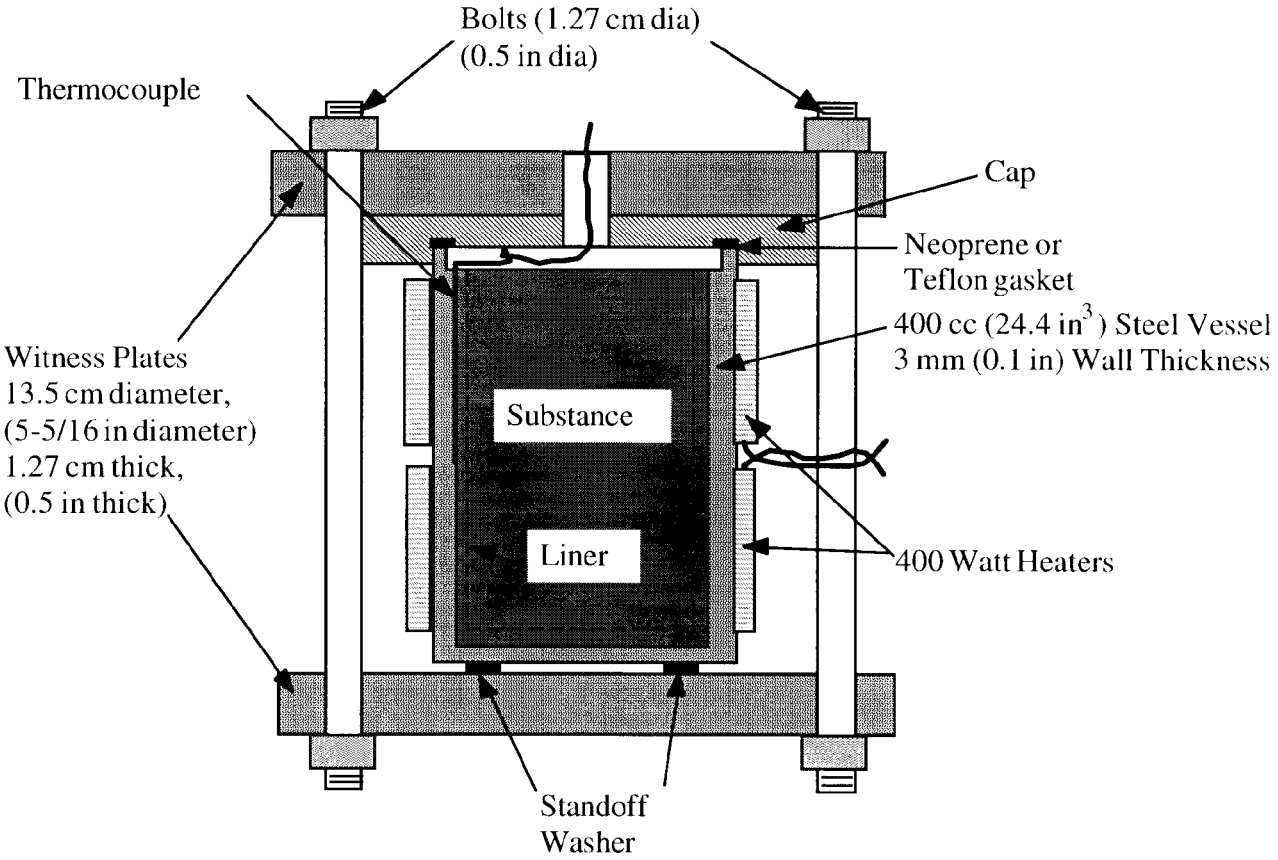

NOT TO SCALE

See Paragraph 5-2.*c*.

Figure 5-6. Slow cookoff bomb test device - UN Tests 1(b) (iii) and 2(b) (iv)

Figure 5-6. Slow cookoff bomb test device—UN Tests 1(b) (iii) and 2(b) (iv)

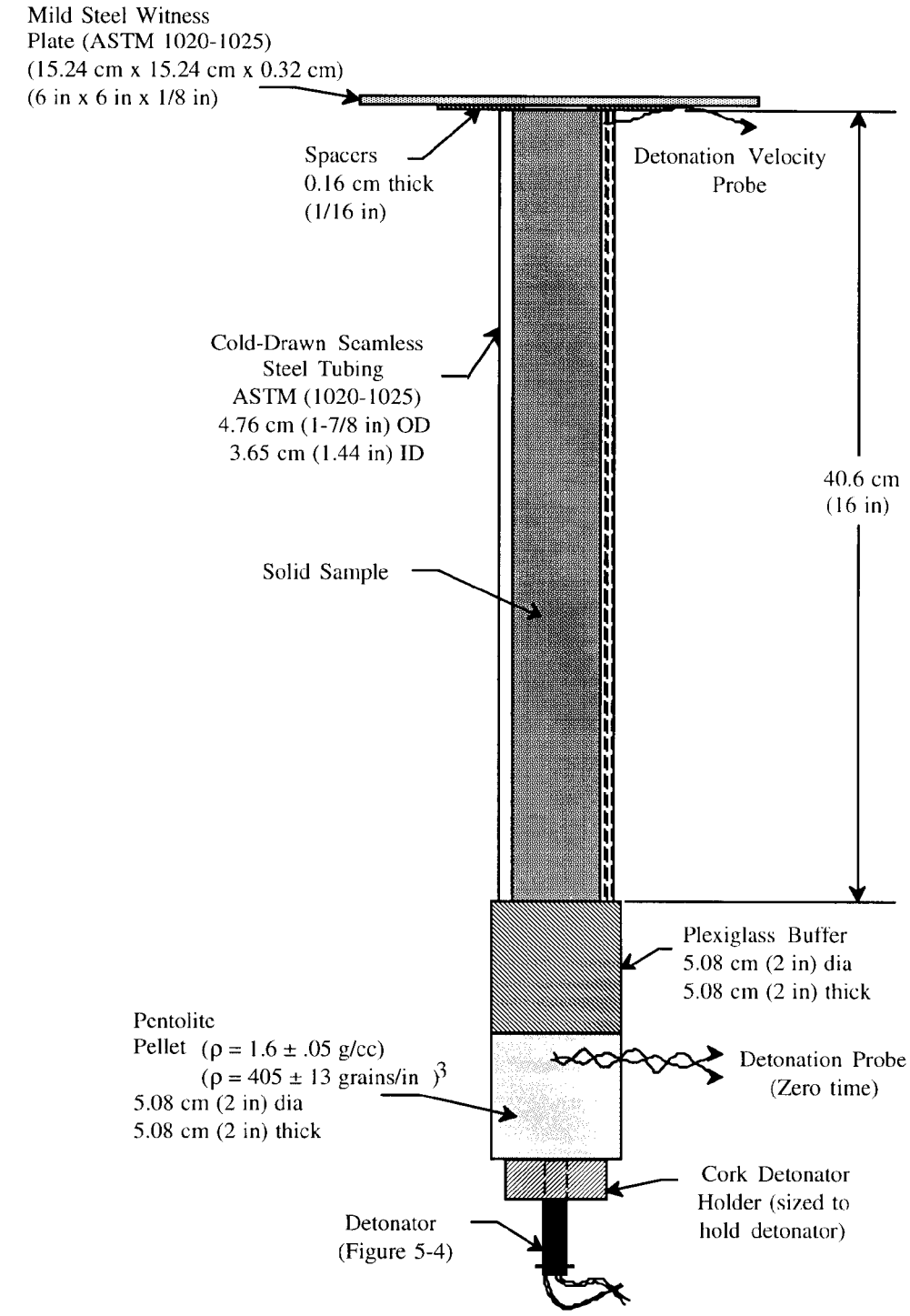

NOT TO SCALE

See Paragraph 5-3.*a*.

Figure 5-7. Gap test configuration for solid substances—UN Test 2(a) (iii)

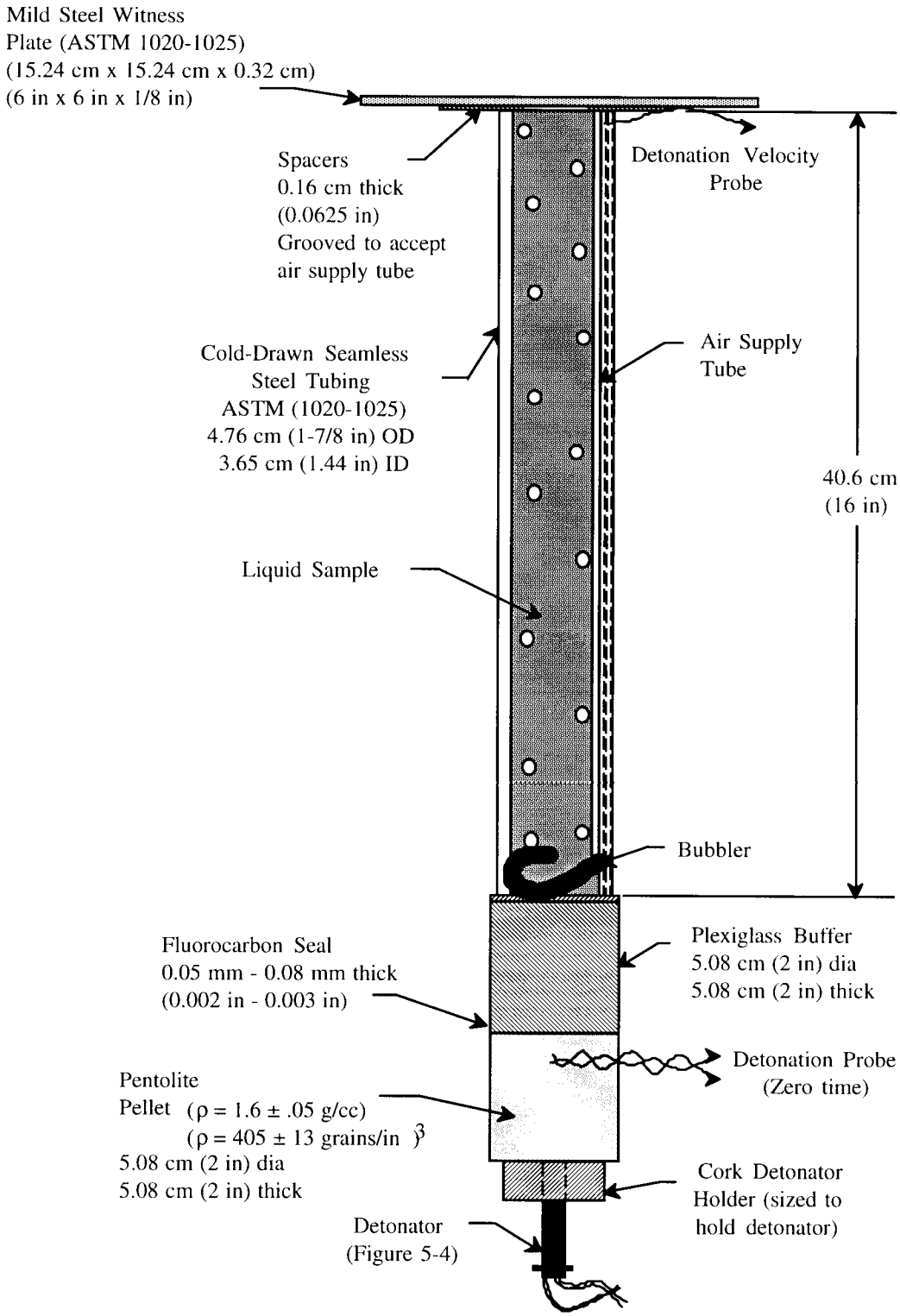

NOT TO SCALE

See Paragraph 5-3.*a*.

Figure 5-8. Cap test configuration for liquid substances—UN Test 2(a) (iii)

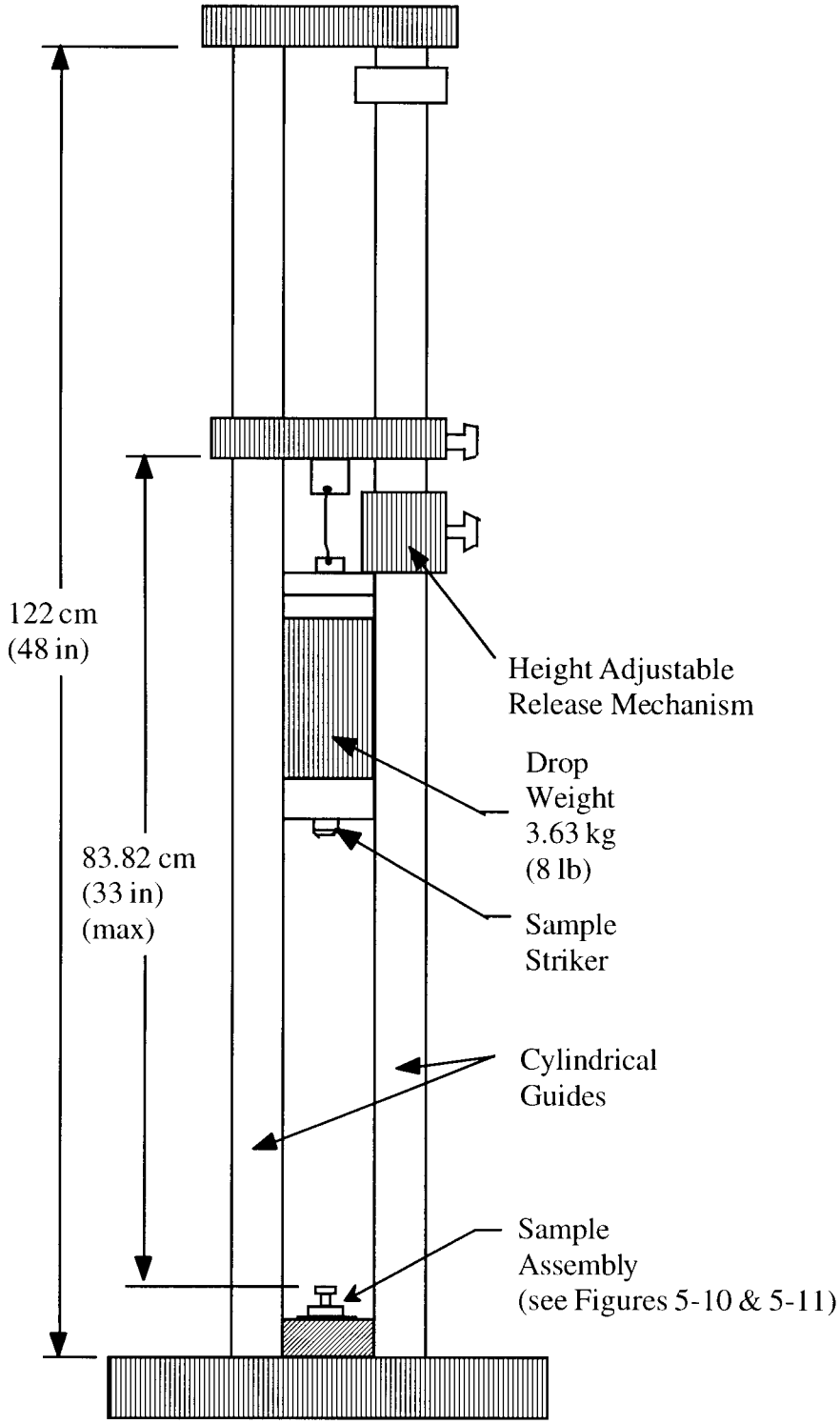

NOT TO SCALE

See Paragraph 5-4.*a*.

Figure 5-9. Bureau of explosives impact machine—UN Test 3(a) (i)

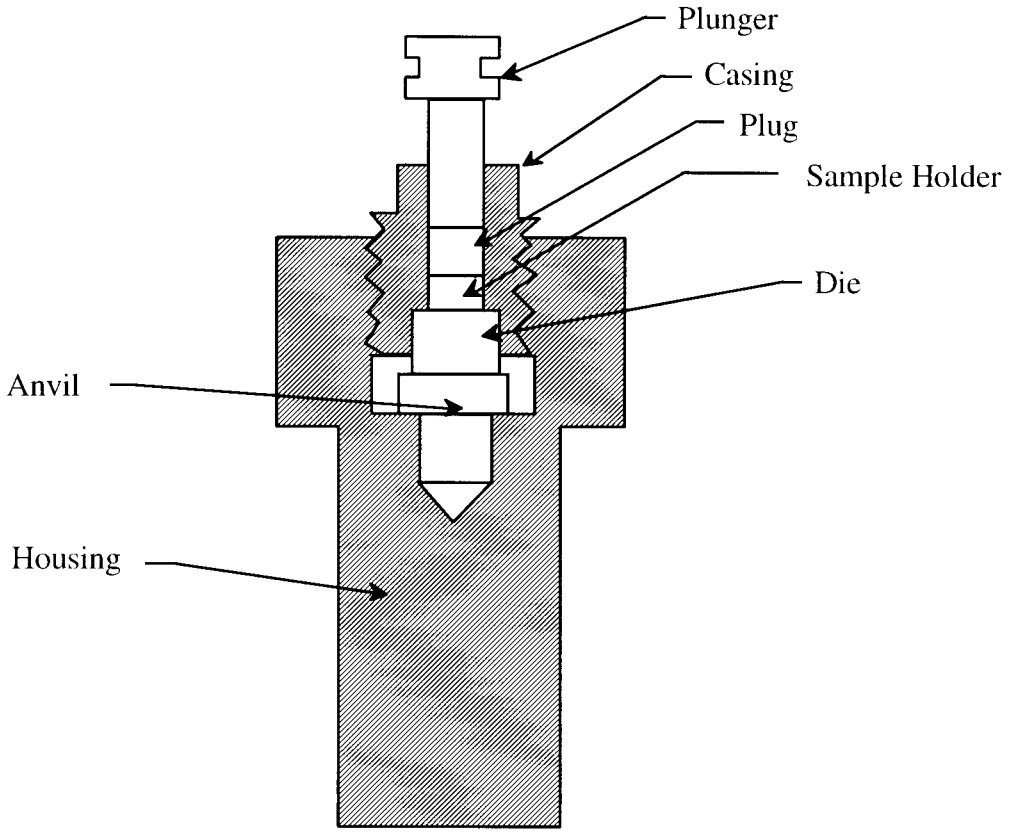

NOT TO SCALE

See paragraph 5-4.*a*.

Figure 5-10. Bureau of explosives impact machine sample assembly for solid substances—UN Test 3(a) (i)

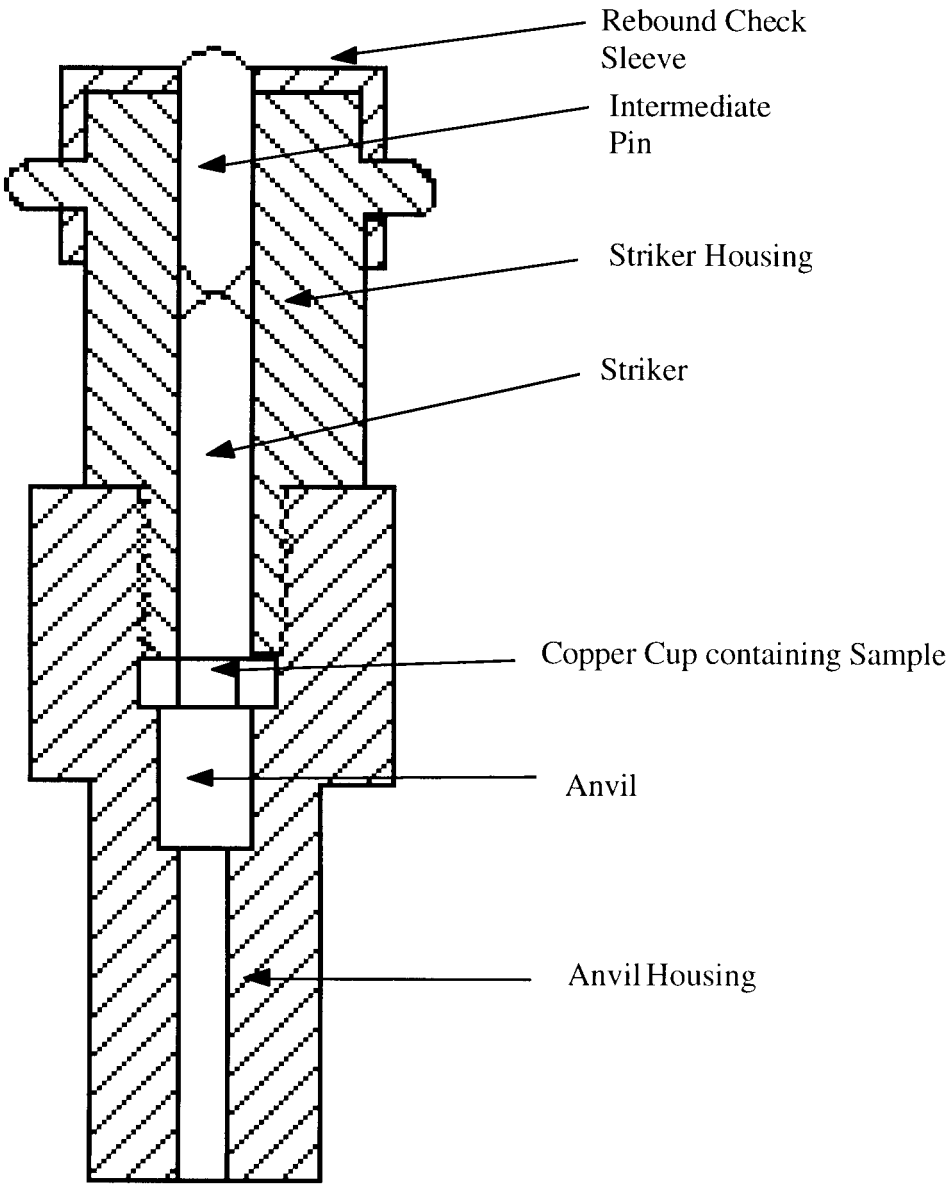

NOT TO SCALE

See Paragraph 5-4.*a*.

Figure 5-11. Bureau of explosives impact machine sample assembly for liquid substances—UN Test 3(a) (i)

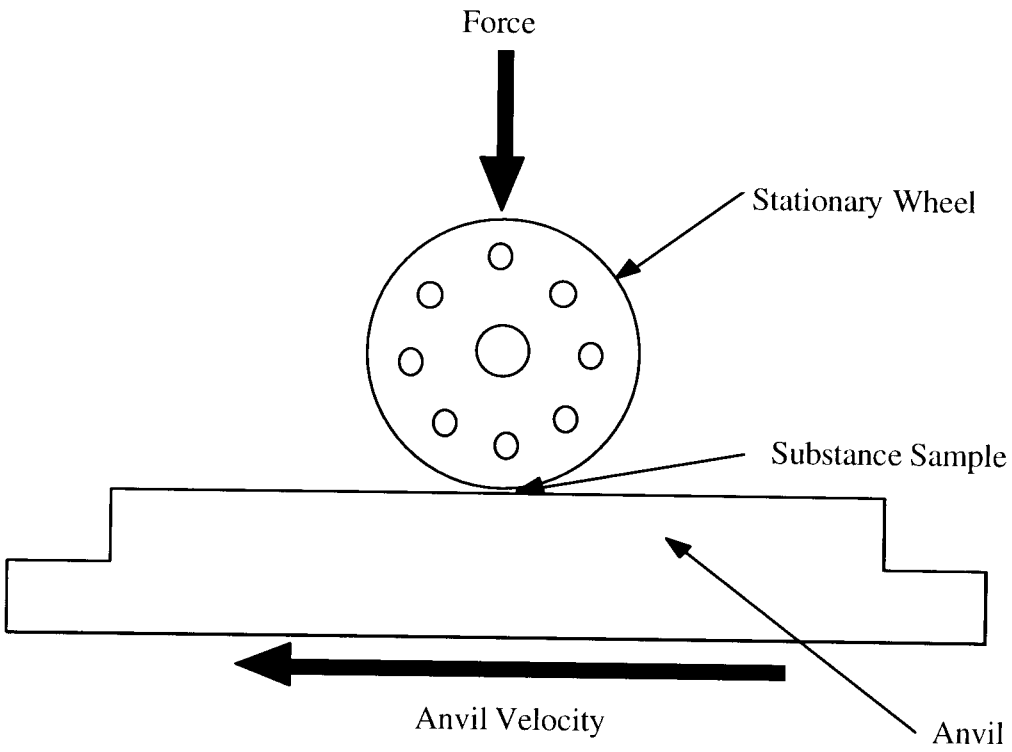

NOT TO SCALE

See Paragraph 5-4.*b*.

Figure 5-12. ABL friction test configuration—UN Test 3(b) (iii)

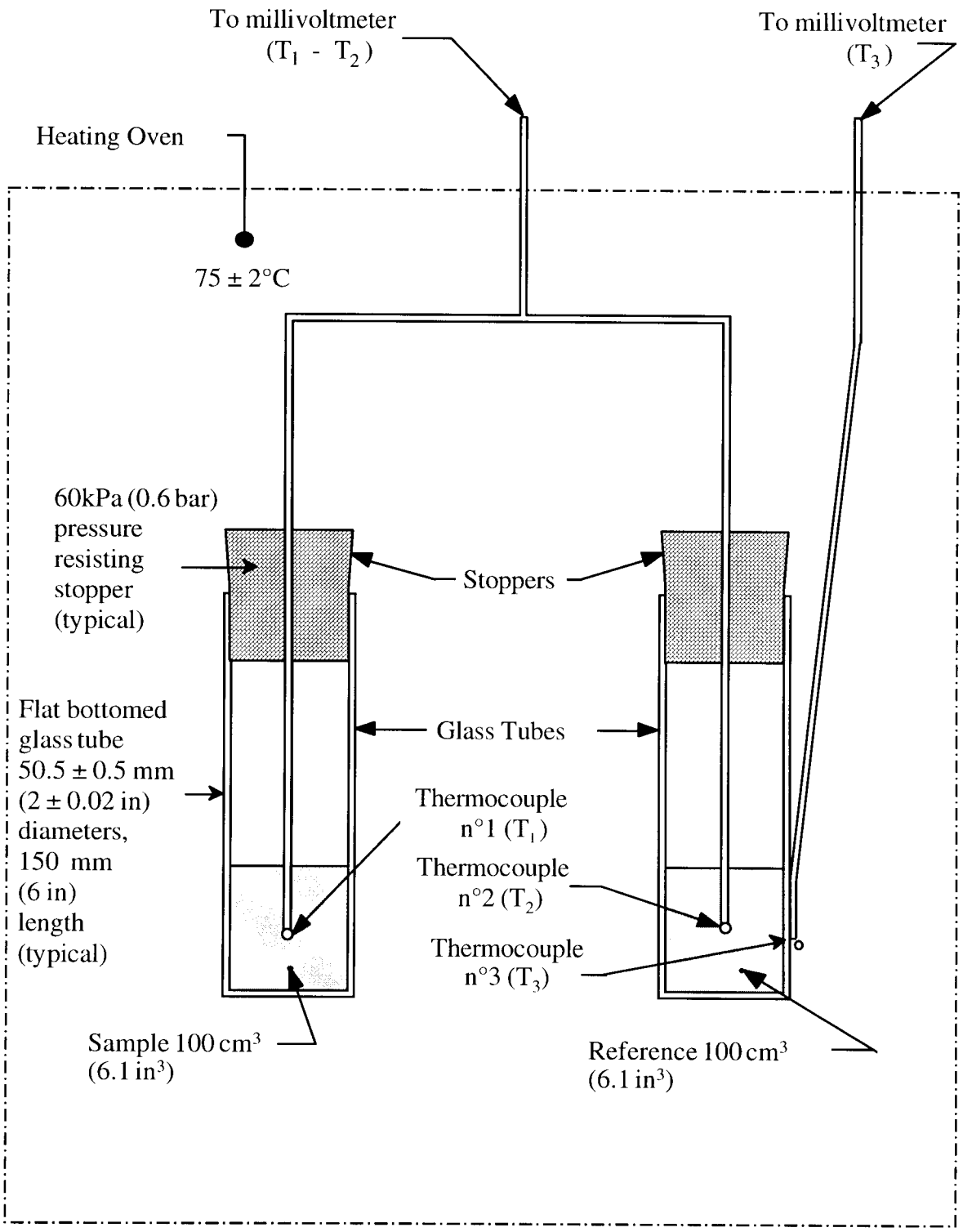

NOT TO SCALE

See Paragraph 5-4.*c*.

Figure 5-13. Termal stability test configuration—UN Test 3(c)

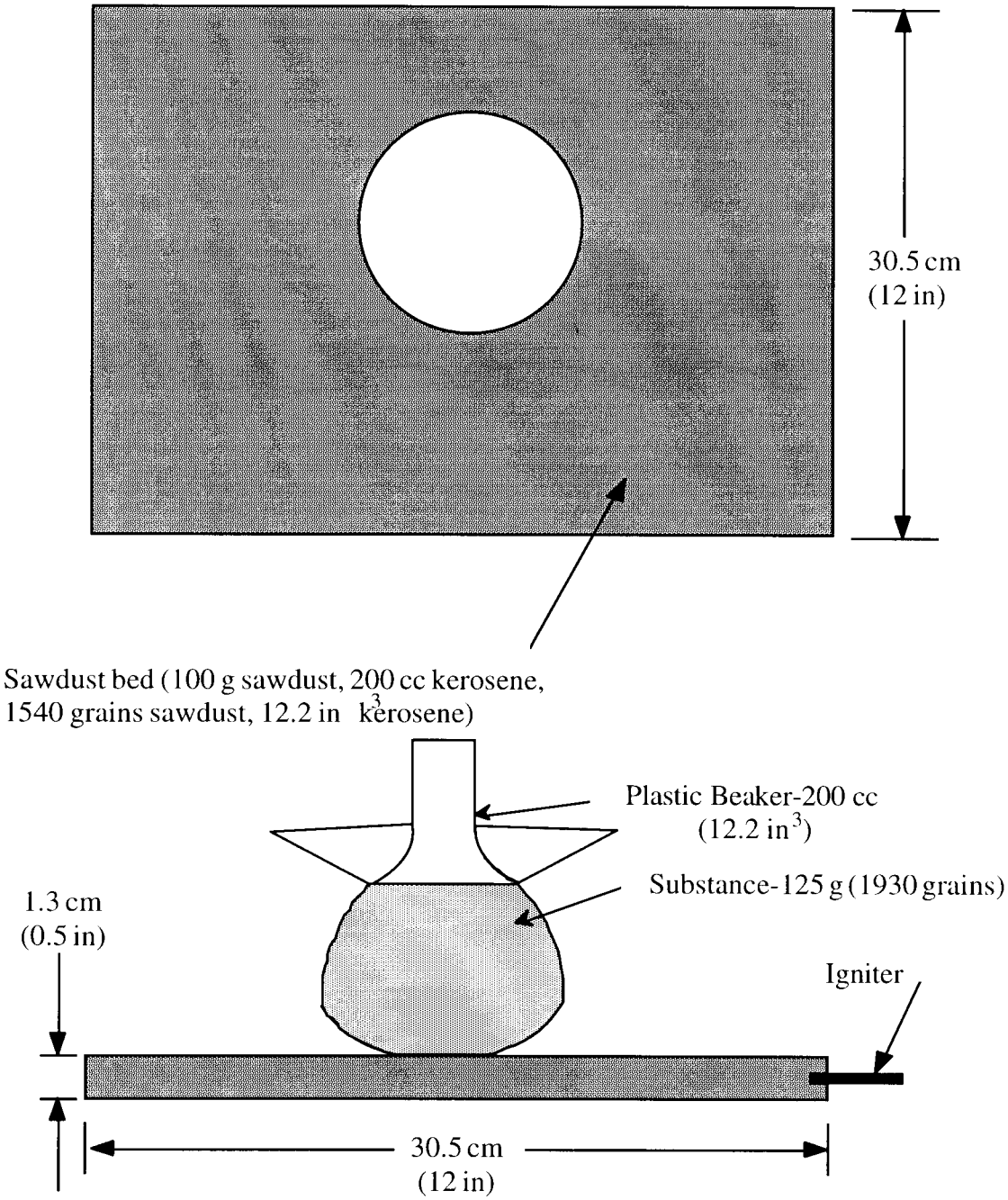

NOT TO SCALE

See Paragraph 5-4.*d*.

Figure 5-14. Small-scale burning test configuration—UN Test 3 (d) (i)

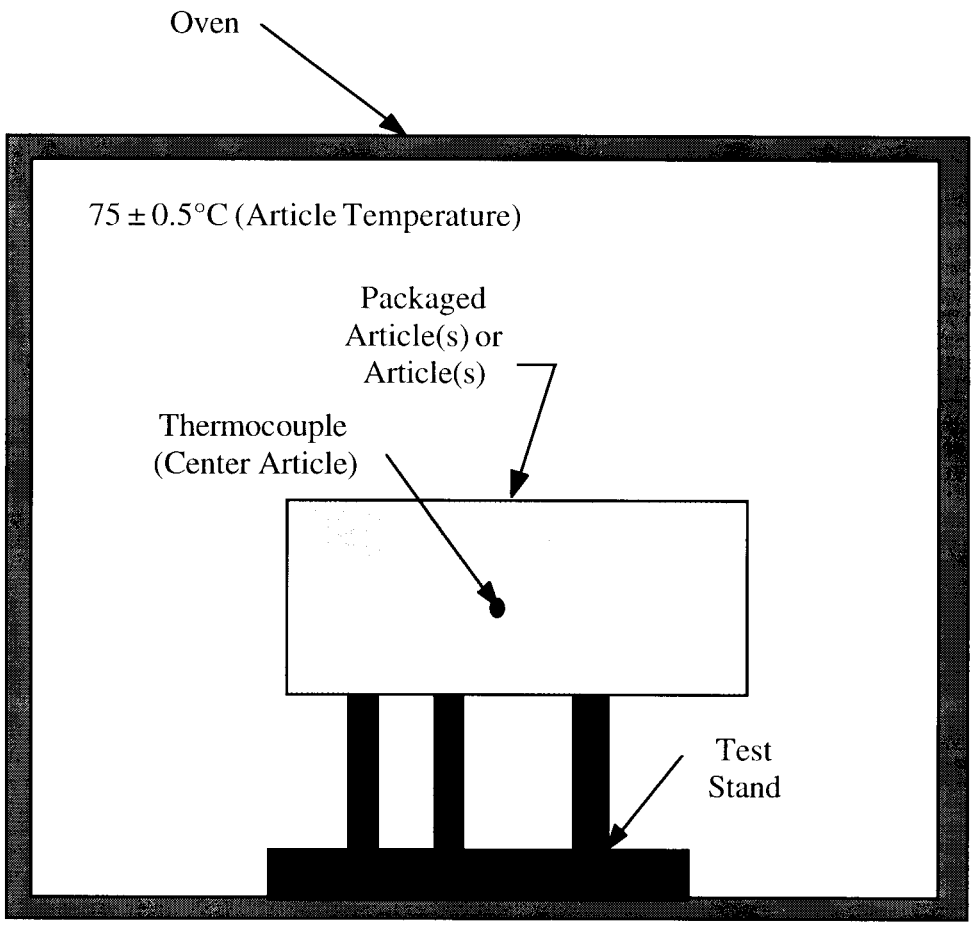

NOT TO SCALE

See Paragraph 5-5.*a*.

Figure 5-15. Termal stability test for articles—UN Test 4(a)

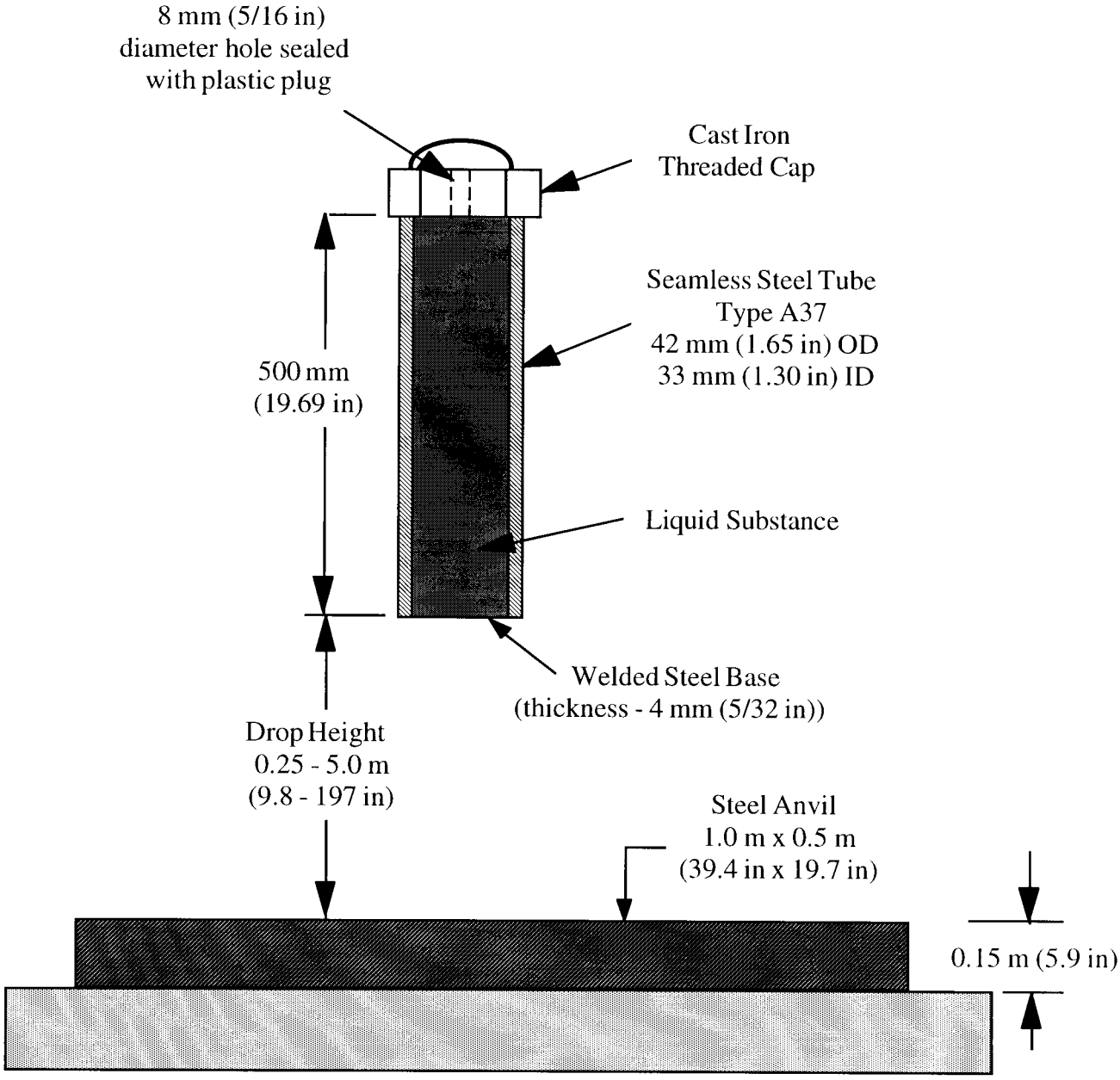

NOT TO SCALE

See Paragraph 5-5.*b*.

Figure 5-16. Steel tube drop test for liquids—UN Test 4(b) (i)

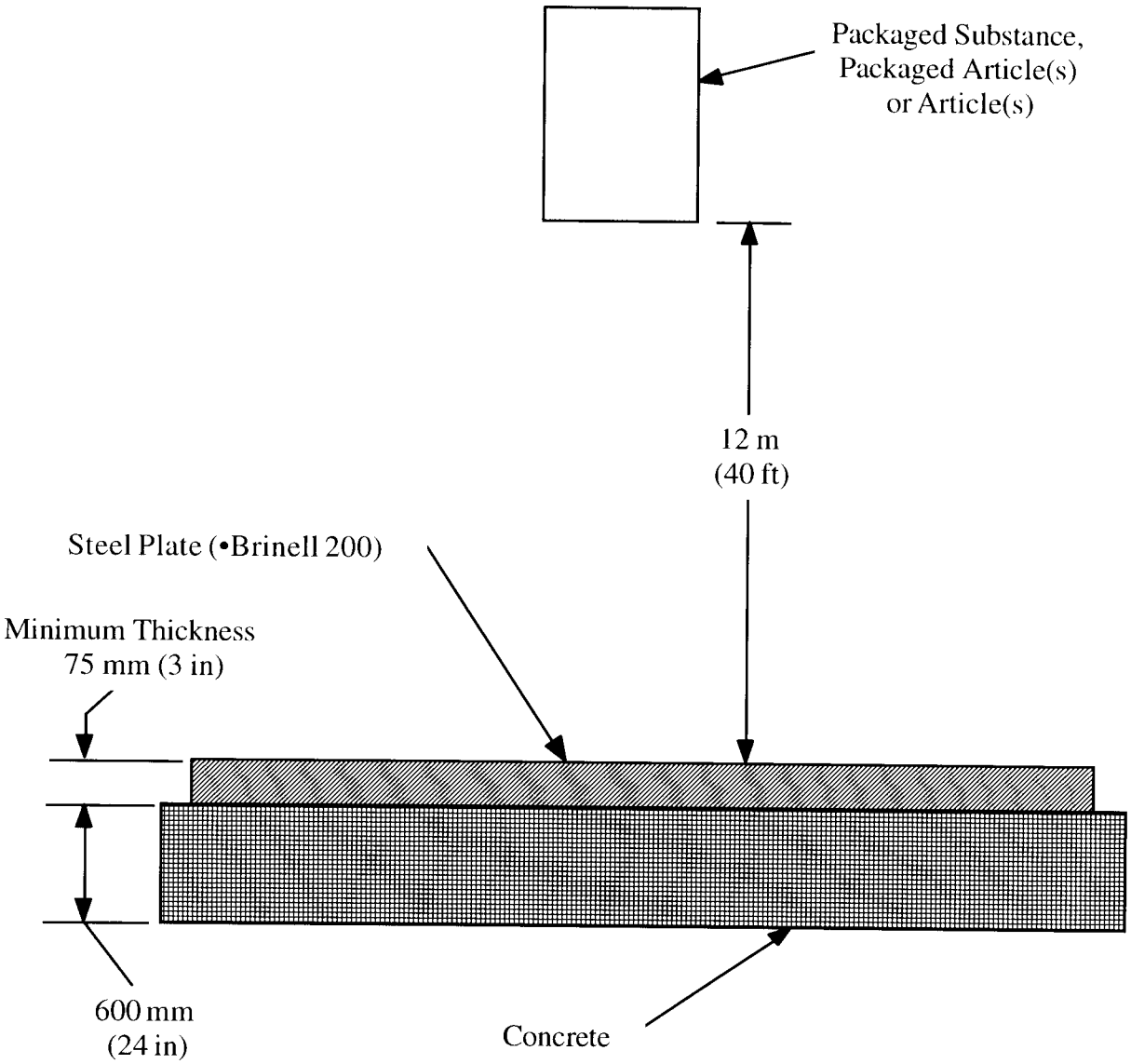

NOT TO SCALE

See Paragraph 5-5.*c*.

Figure 5-17. Twelve meter drop test configuration —UN Test 4(b) (ii)

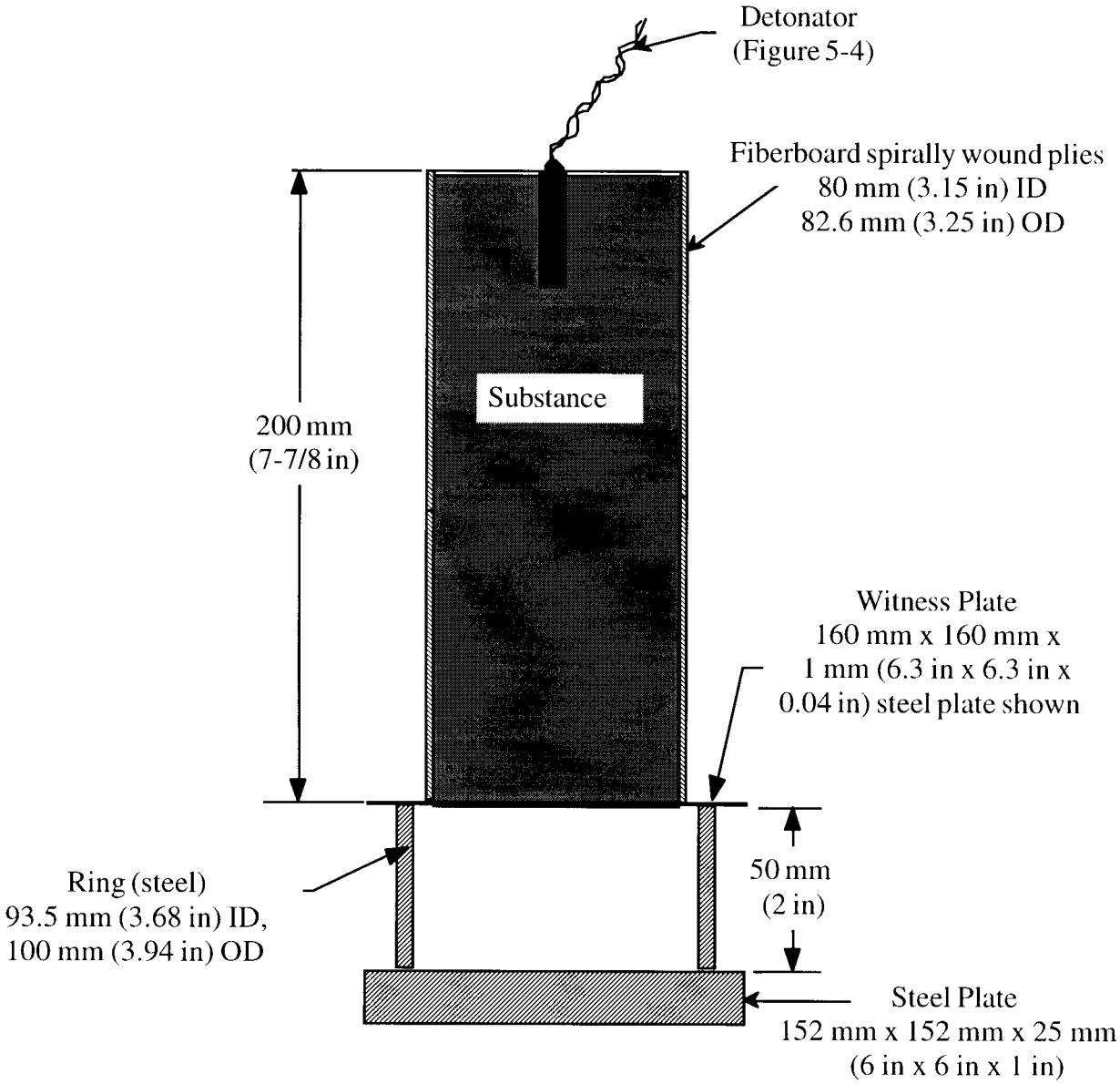

NOT TO SCALE

See Paragraphs 5-6.*a* and 5-8.*a*.

Figure 5-18. Cap sensitivity test configuration—UN Tests 5(a) and 7(a)

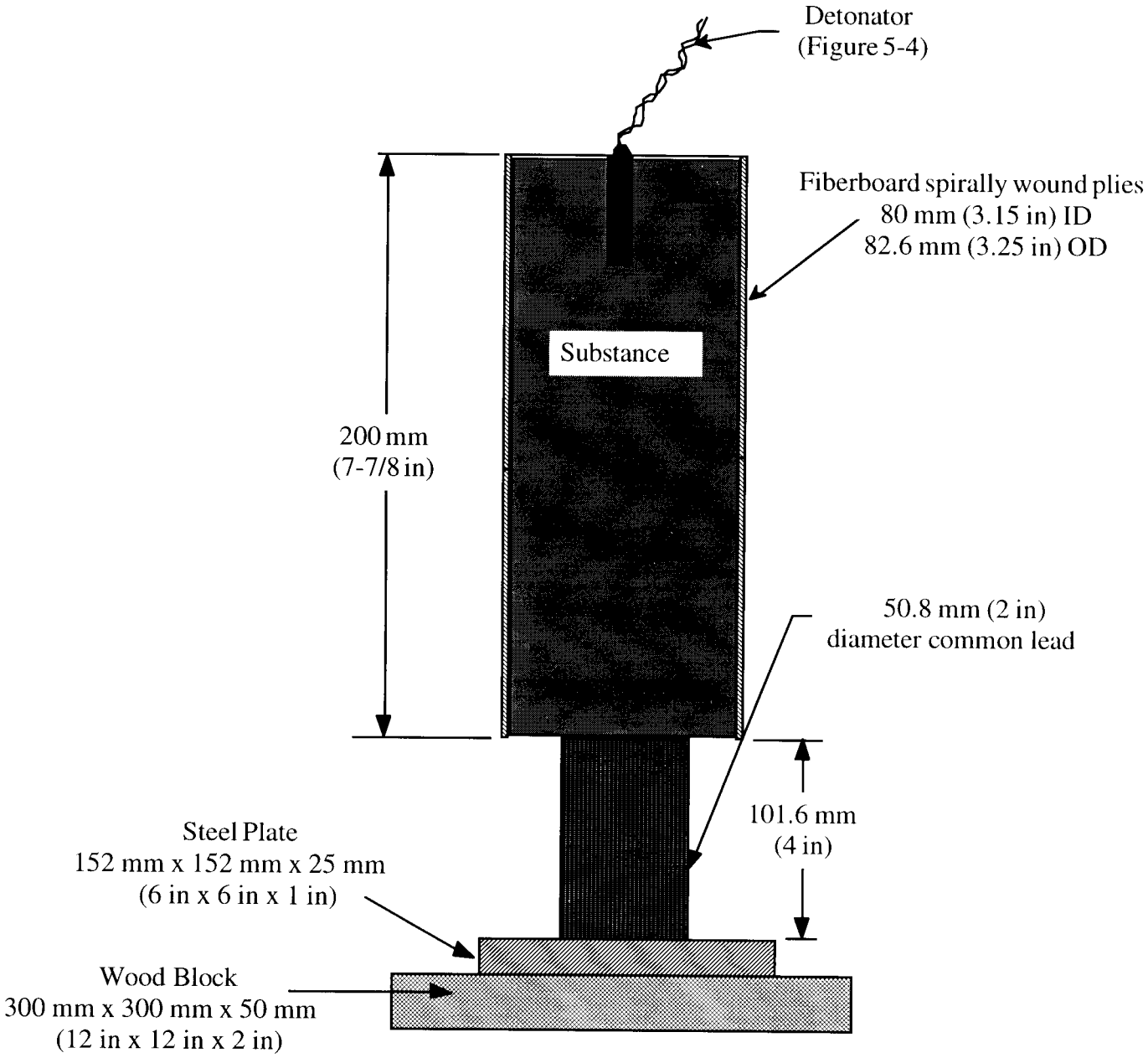

NOT TO SCALE

See Paragraphs 5-6.*a* and 5-8.*a*.

Figure 5-19. Alternate cap sensitivity test configuration—UN Tests 5(a) and 7(a)

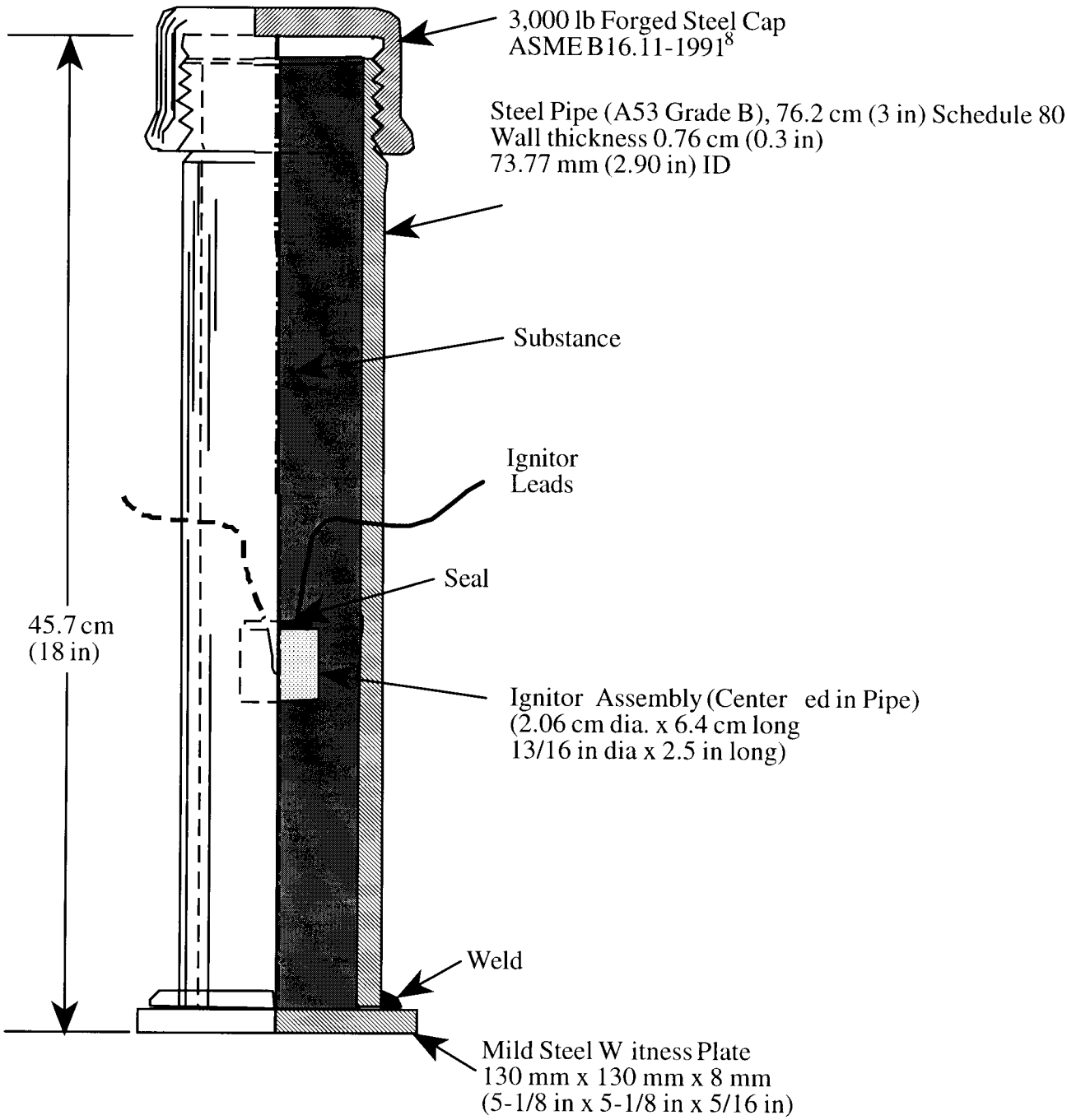

NOT TO SCALE

[8] ASME B16.11-1991, "Forged Fittings, Socket-Welding and Threaded," American Society of Mechanical Engineers, New York, NY (latest version).

See Paragraph 5-6.*b*.

Figure 5-20. Deflagration to detonation test configuration—UN Test 4(b) (ii)

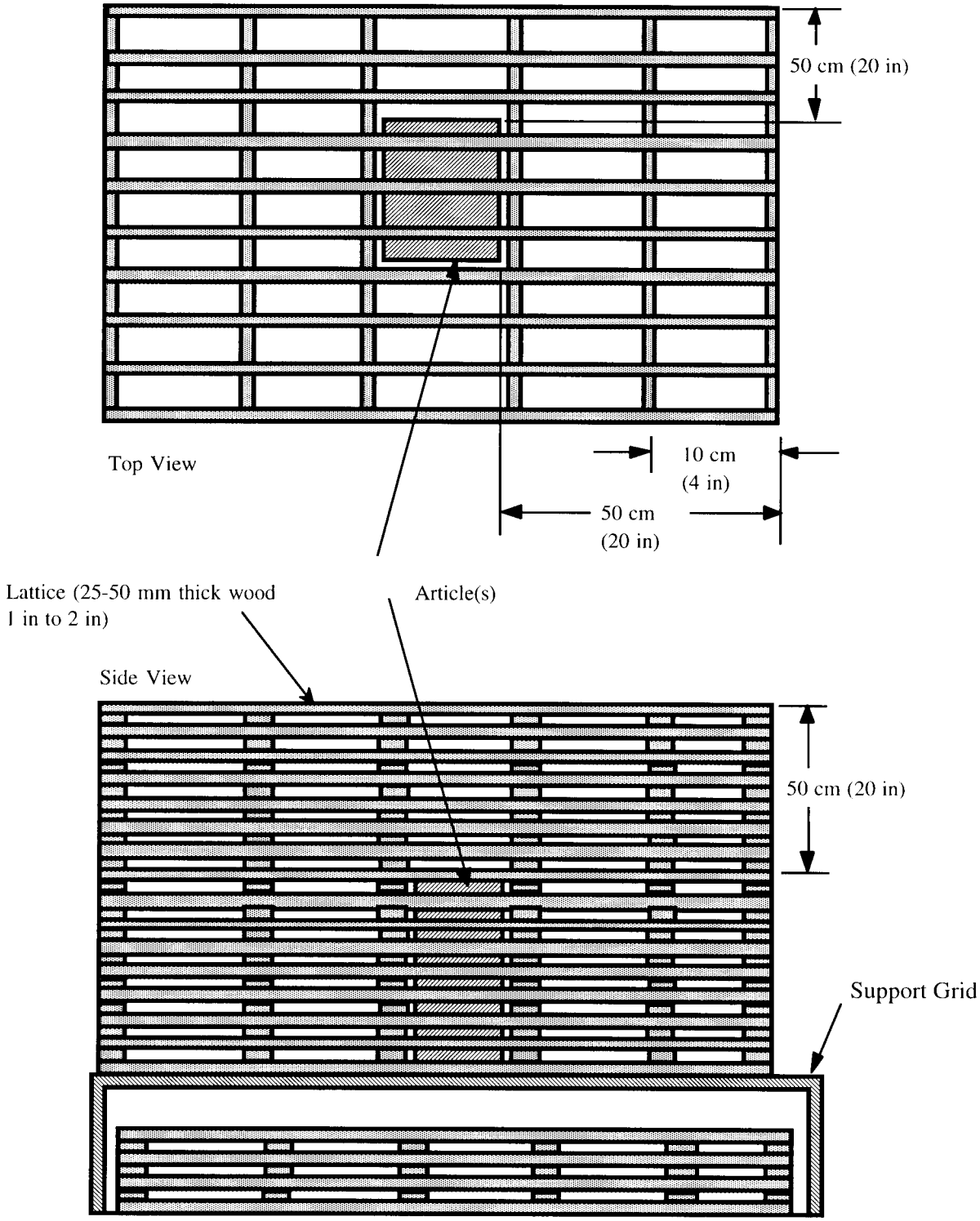

NOT TO SCALE

See Paragraph 5-6.*c*.

Figure 5-21. Typical wood fuel arrangement for external fire test for Hazard Division 1.5—UN Test 5(c)

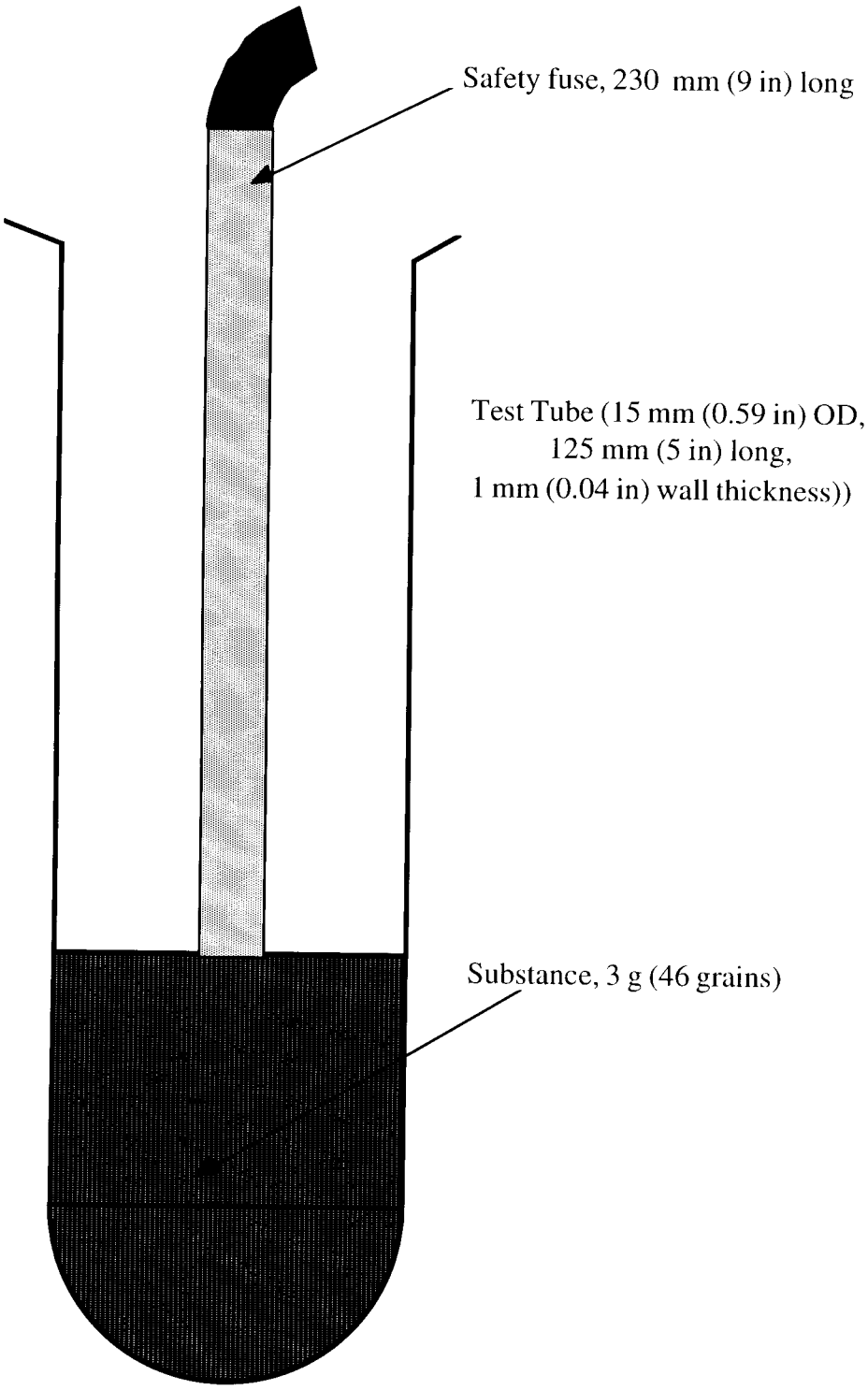

NOT TO SCALE

See Paragraph 5-6.*d*.

Figure 5-22. Prince incendiary spark test arrangement—UN Test 5(d)

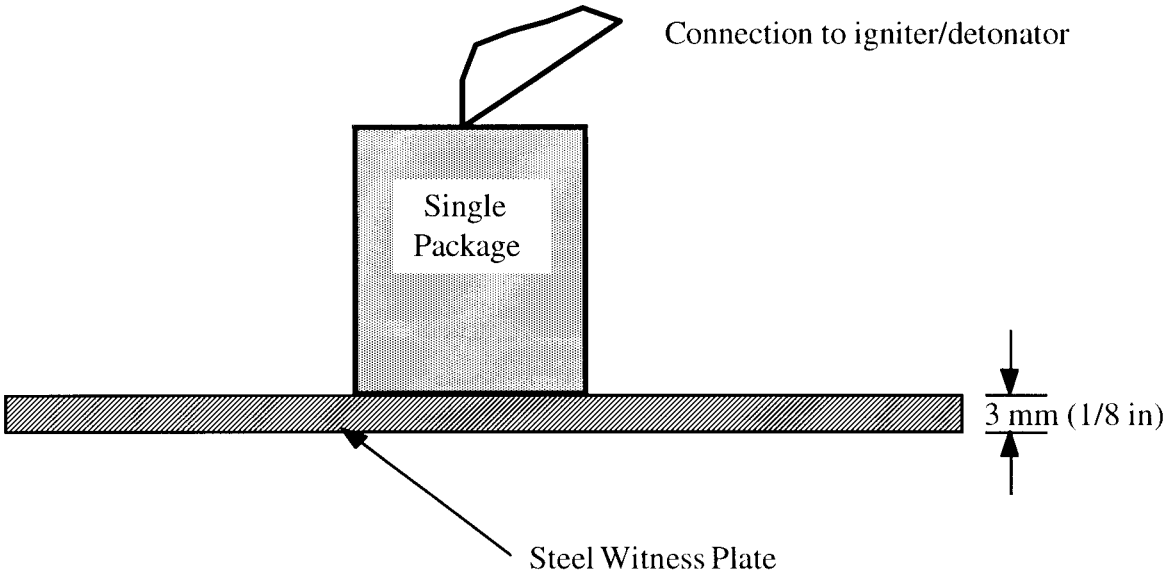

NOT TO SCALE

See Paragraph 5-7.*a*.

Figure 5-23. Single package test arrangement —UN Test 6(a)

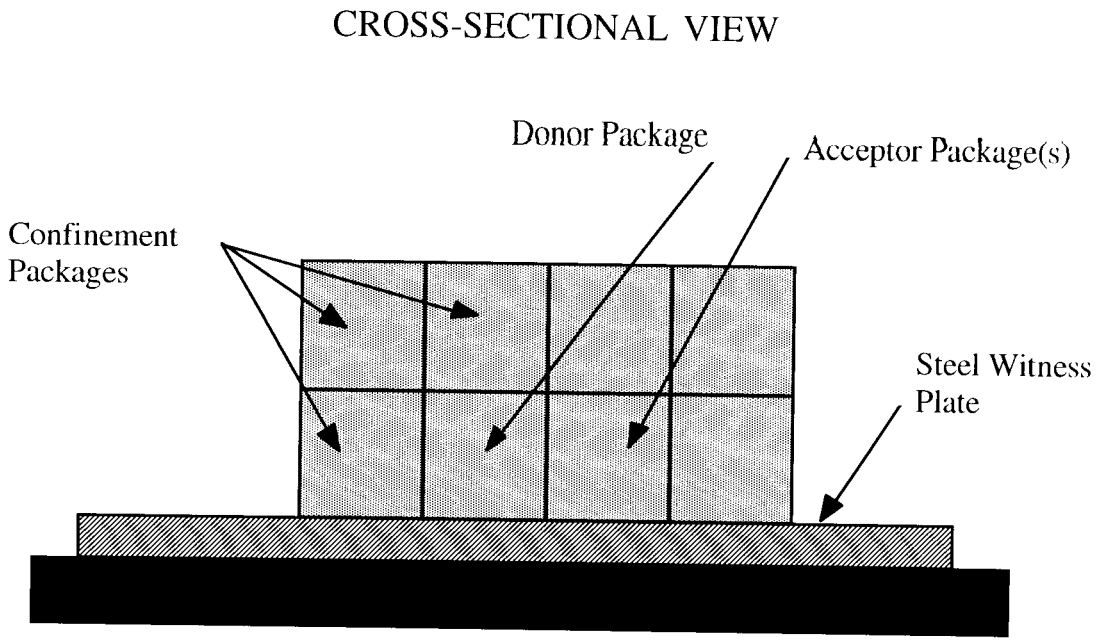

NOT TO SCALE

See Paragraph 5-7.*b*.

Figure 5-24. Typical stack test arrangement—UN Test 6(b)

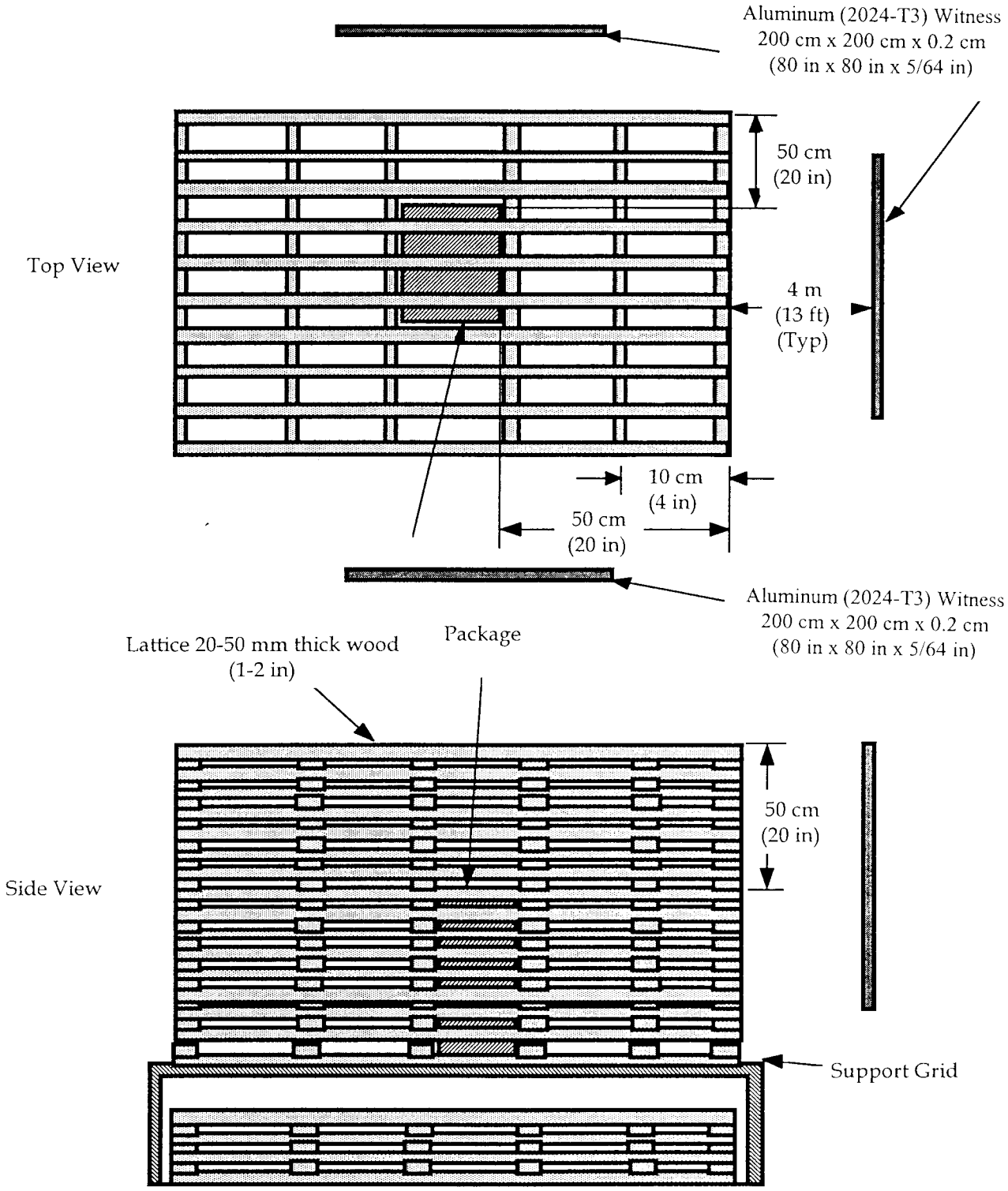

NOT TO SCALE

See Paragraph 5-7.*c*.

Figure 5-25. Typical wood fuel arrangement for external fire (bonfire) test—UN Test 6(c)

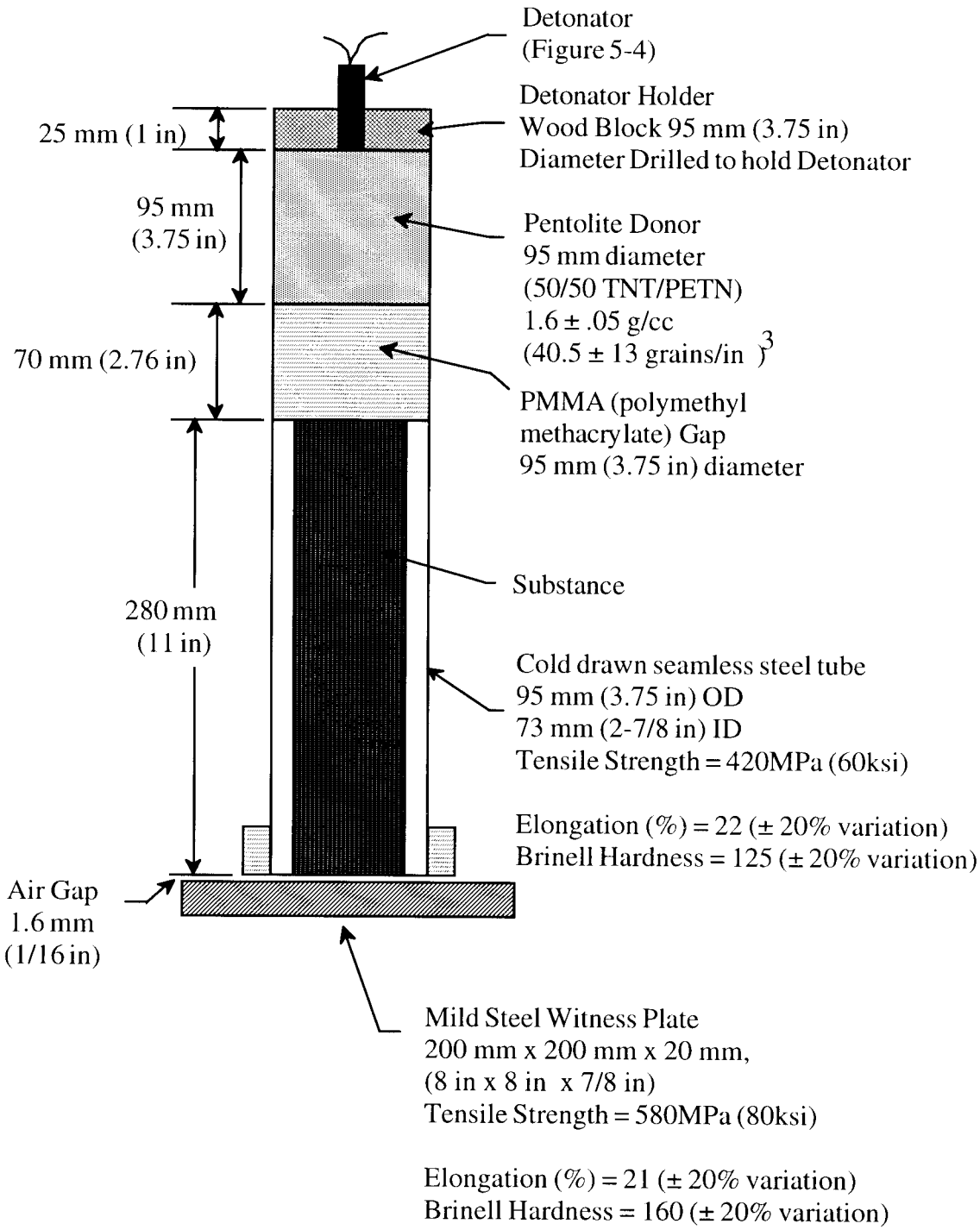

NOT TO SCALE

See Paragraph 5-8.*b*.

Figure 5-26. EIDS gap test configuration—UN Test 7(b)

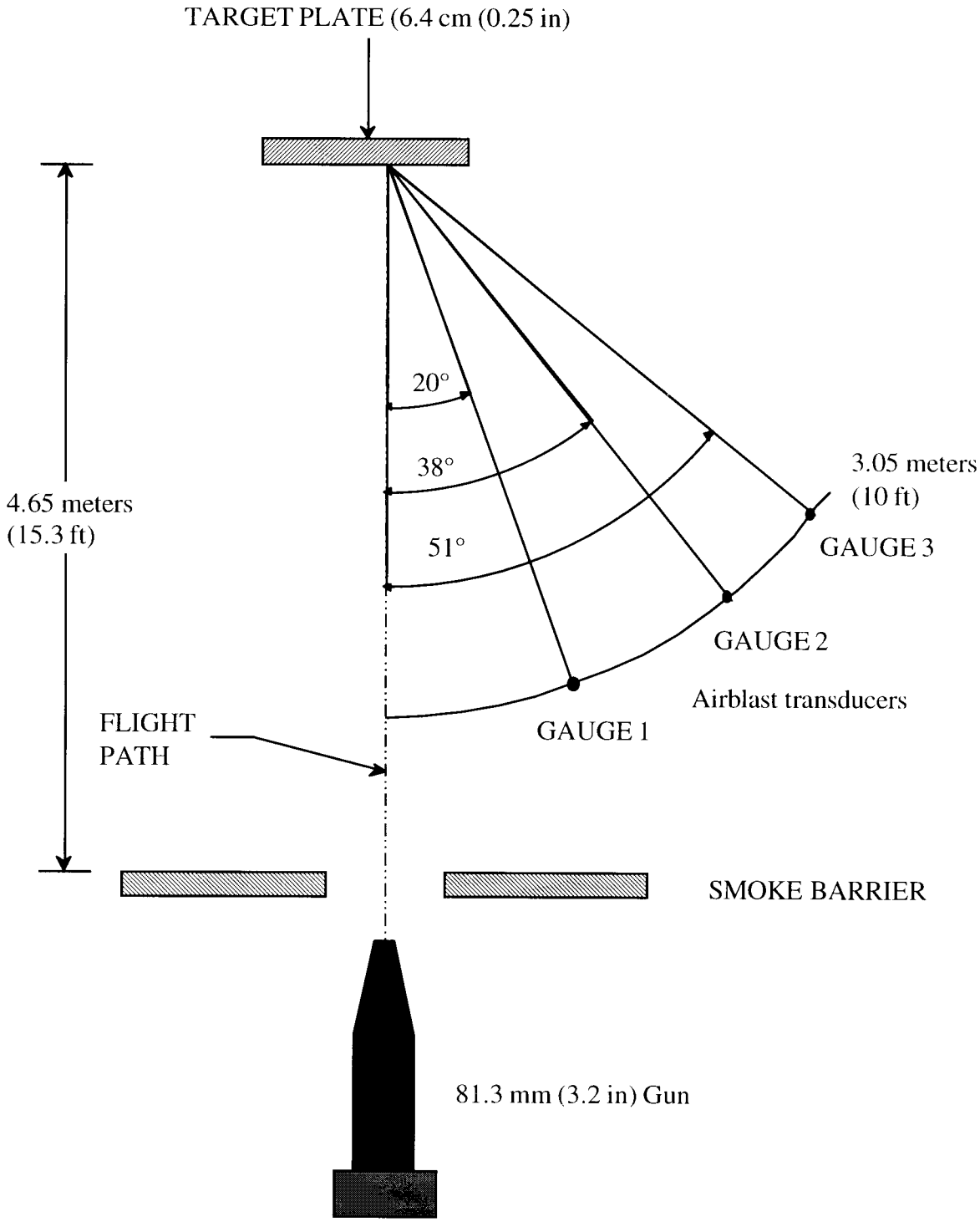

NOT TO SCALE

See Paragraph 5-8.*c*.

Figure 5-27. Susan impact test arrangement—UN Test 7(c) (i)

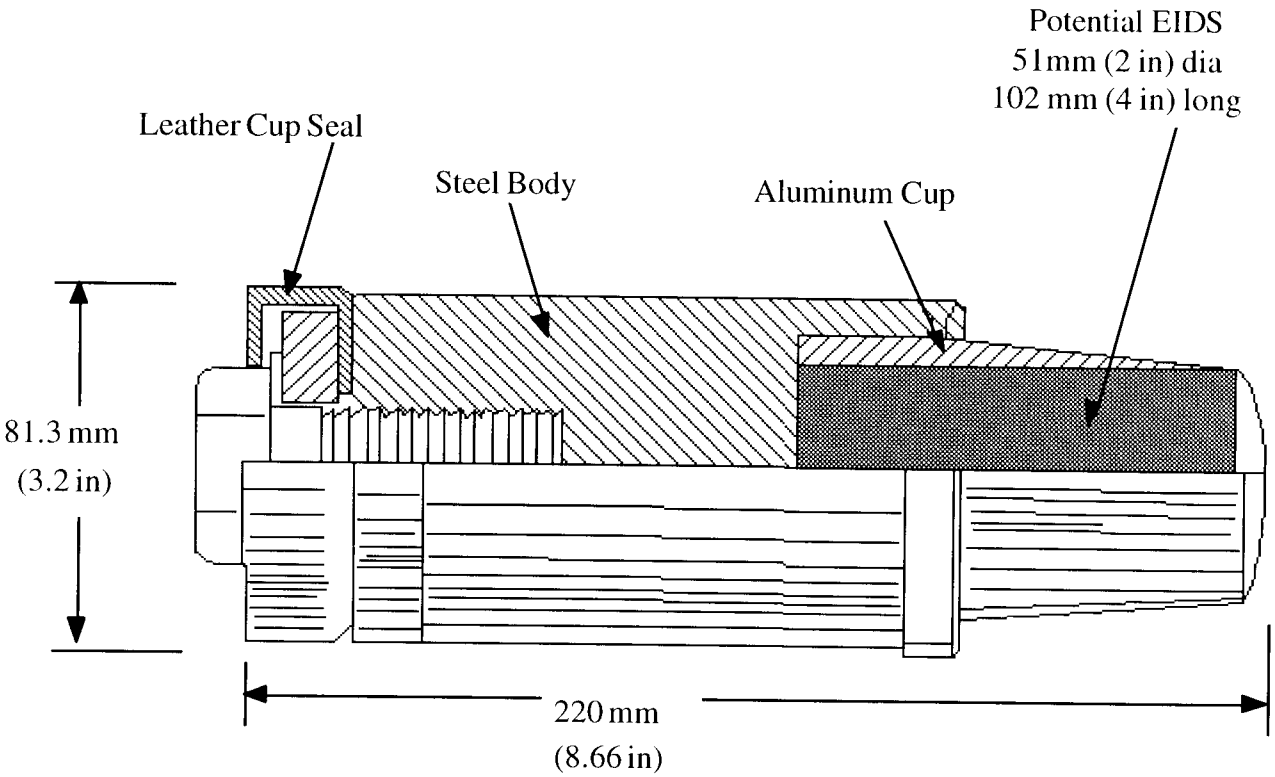

NOT TO SCALE

See Paragraph 5-8.*c*.

Figure 5-28. Susan projectile—UN Test 7(c) (i)

IMPACT DEVICE

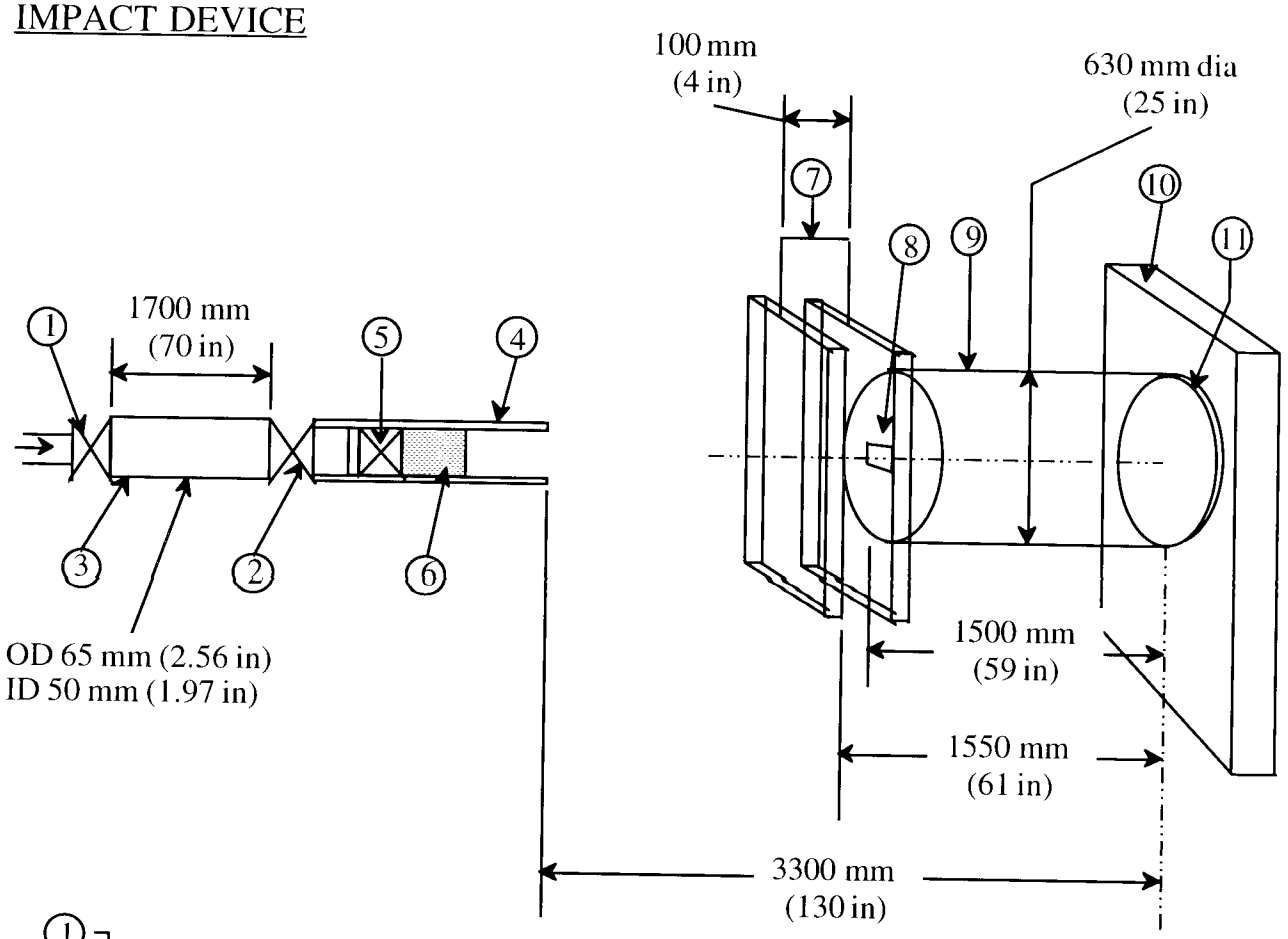

① ② PNEUMATIC VALVES

③ AIR TANK (3.3 liters (201 in ^{3}))

④ LAUNCHER TUBE (Figure 5-29)

⑤ PLASTIC WAD

⑥ SAMPLE (D = 18 ± 0.1 mm (0.71 in ± 0.004 in)) W = 9 ± 0.1 g (140 ± 1.5 grains)

⑦ OPTICAL BARRIERS

⑧ OPENING - 100 X 100 mm (4 in x 4 in)

⑨ PLEXIGLASS BOX (Fragment Recovery)

⑩ CONCRETE WALL

⑪ STEEL IMPACT PLATE 630 mm dia, 20 mm thick (25 in dia, 3/4 in thick)

NOT TO SCALE

See Paragraph 5-8.*d*.

Figure 5-29. Friability test configuration—UN Tests 7(c) (ii) and 7(d) (ii)

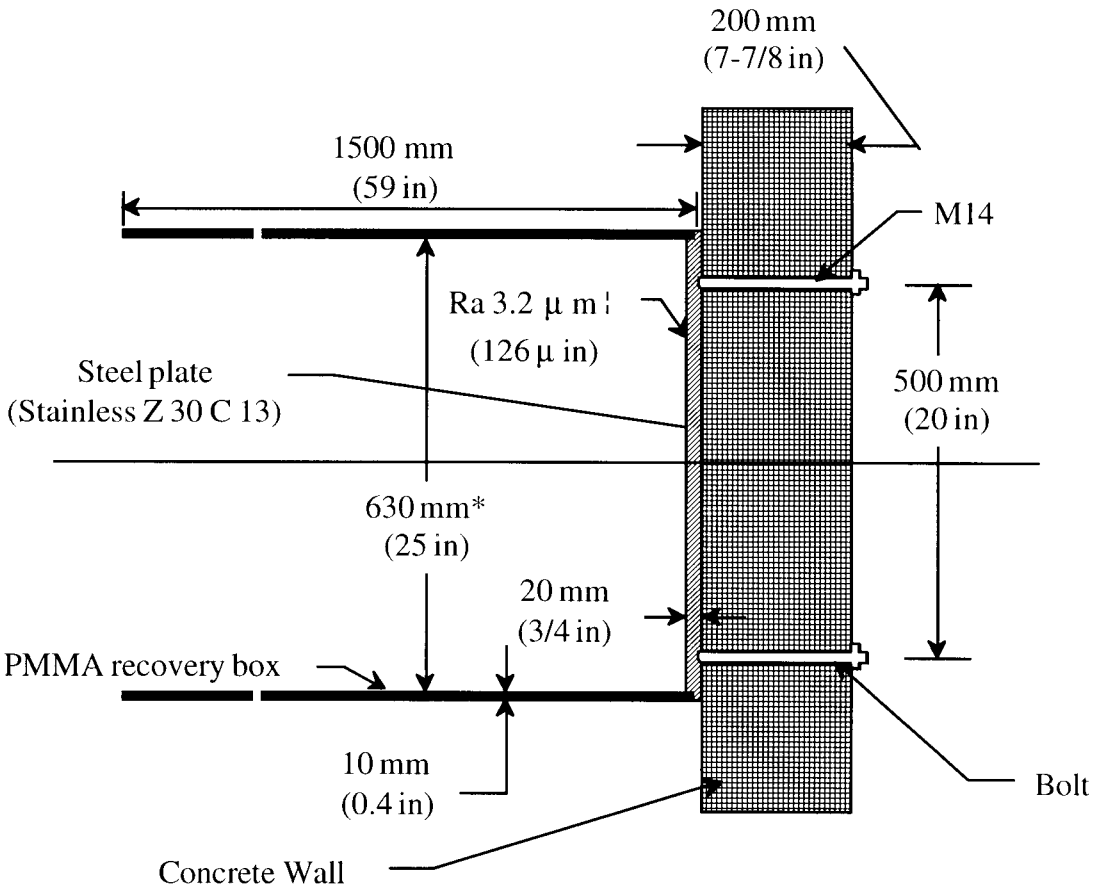

* In case of highly fragmentable sample, use ID = 200 mm (7-7/8 in) to limit the fine dust loss.

NOT TO SCALE

See Paragraph 5-8.*d*.

Figure 5-30. Steel plate and recovery box setup for friability test—UN Tests 7(c) (ii) and 7(d) (ii)

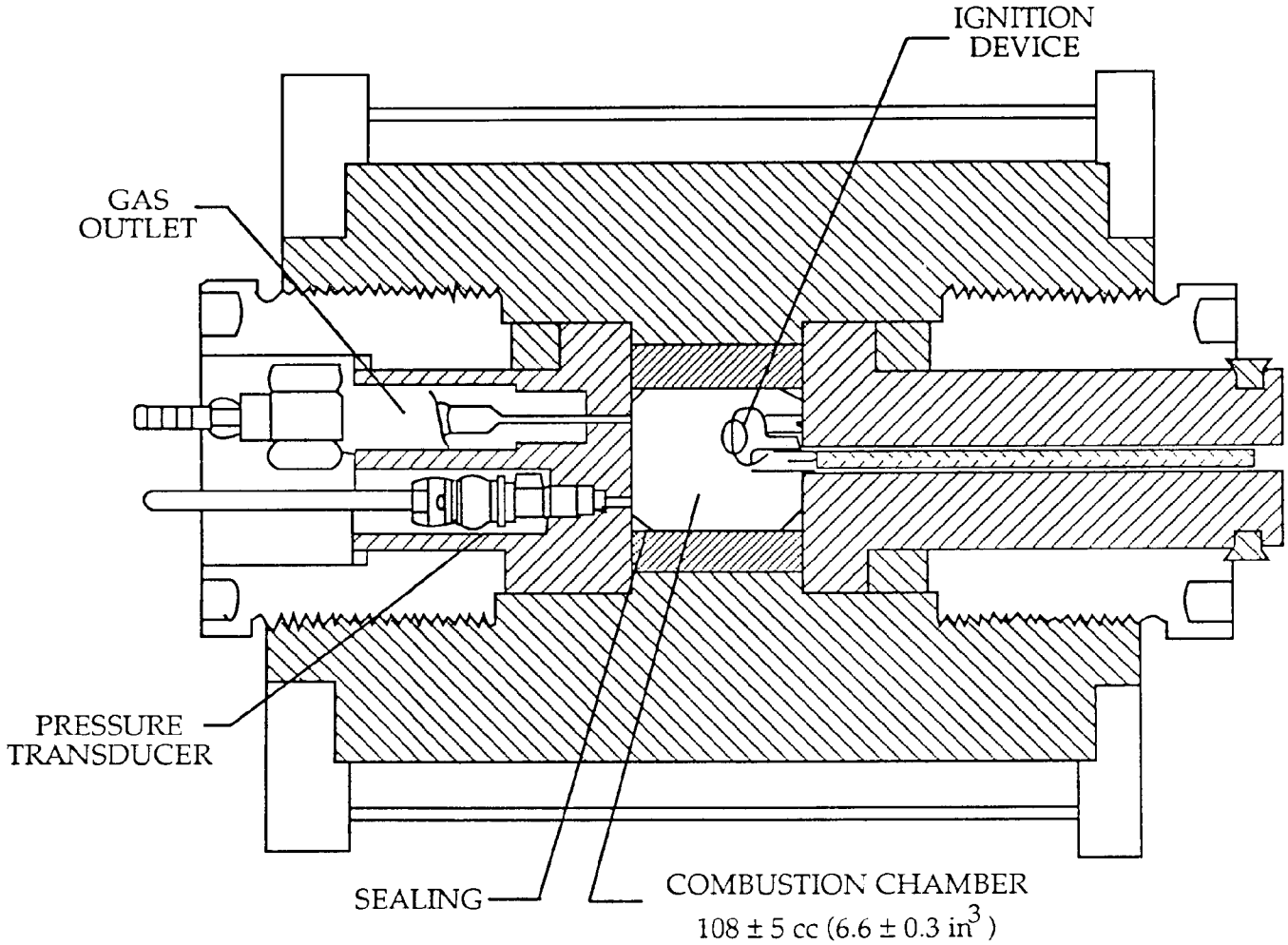

NOTE: Chamber must be able to sustain a pressure of 300 MPa (3 kilobars)

NOT TO SCALE

See Paragraph 5-8.*d*.

Figure 5-31. Closed vessel for friability test–UN Tests 7(c) (ii) and 7(d) (ii)

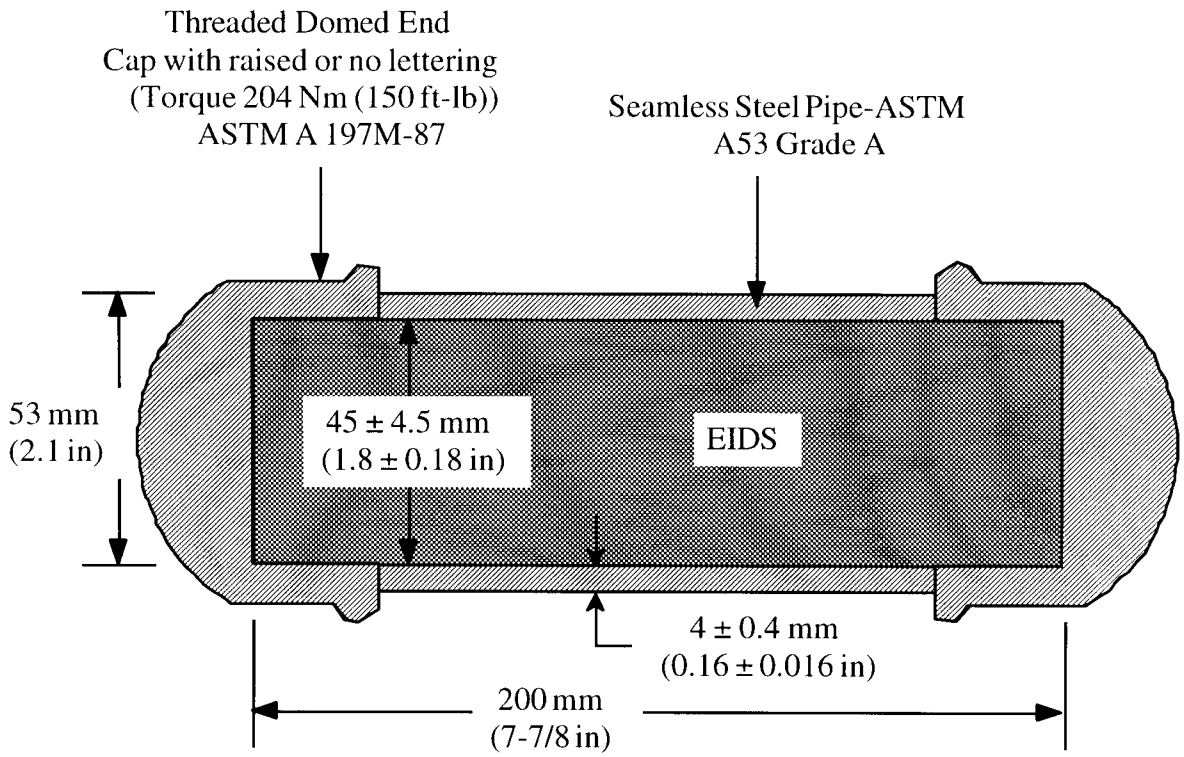

NOT TO SCALE

See Paragraphs 5-8.*e*, 5-8.*f* and 5-8.*g*.

Figure 5-32. Steel pipe used for EIDS bullet impact, EIDS external fire test and EIDS slow cookoff test—UN Tests 7(d) (i), 7(e), and 7(f)

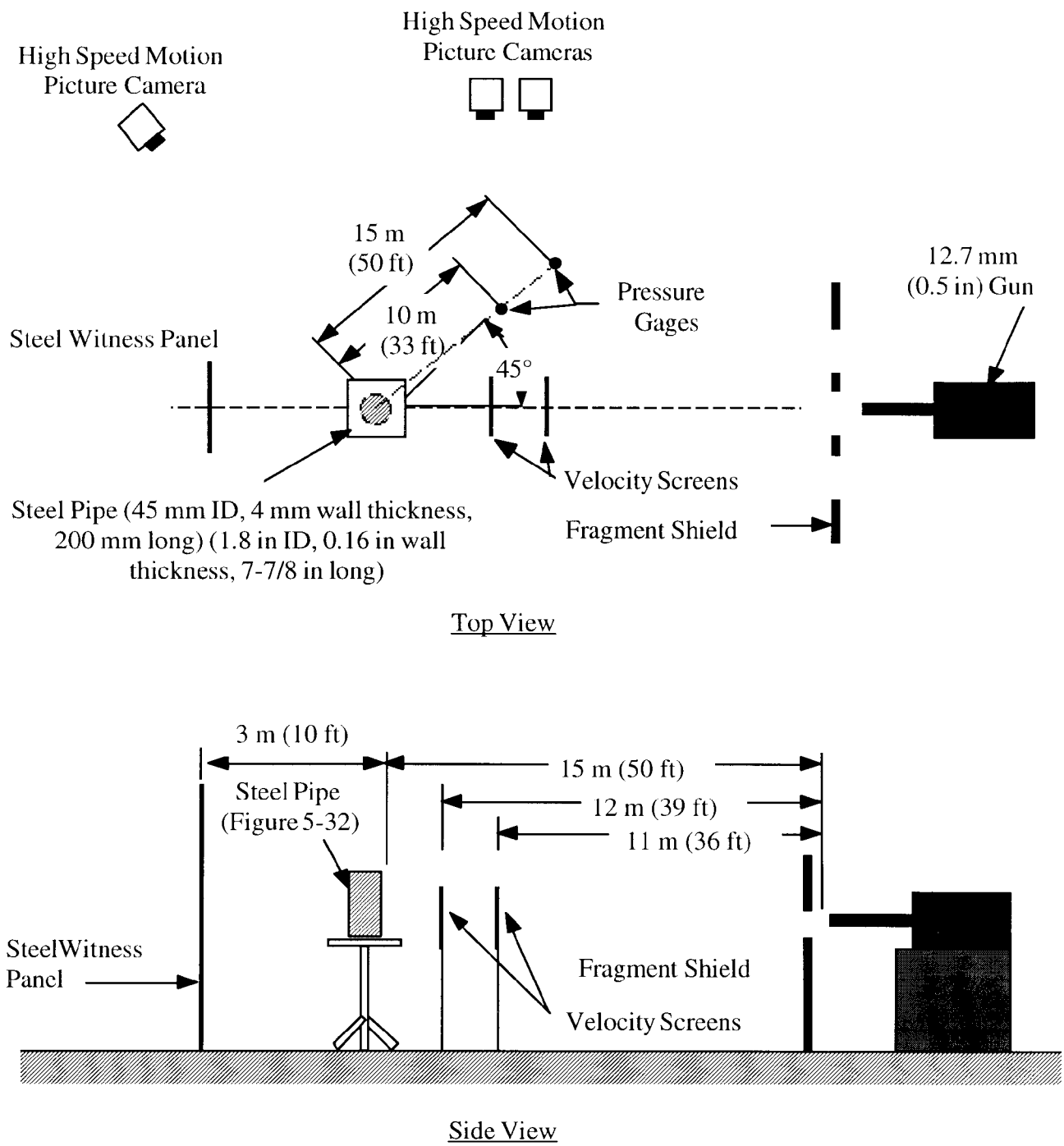

NOT TO SCALE

See Paragraph 5-8.*e*.

Figure 5-33. EIDS bullet impact test arrangement—UN Test 7(d) (i)

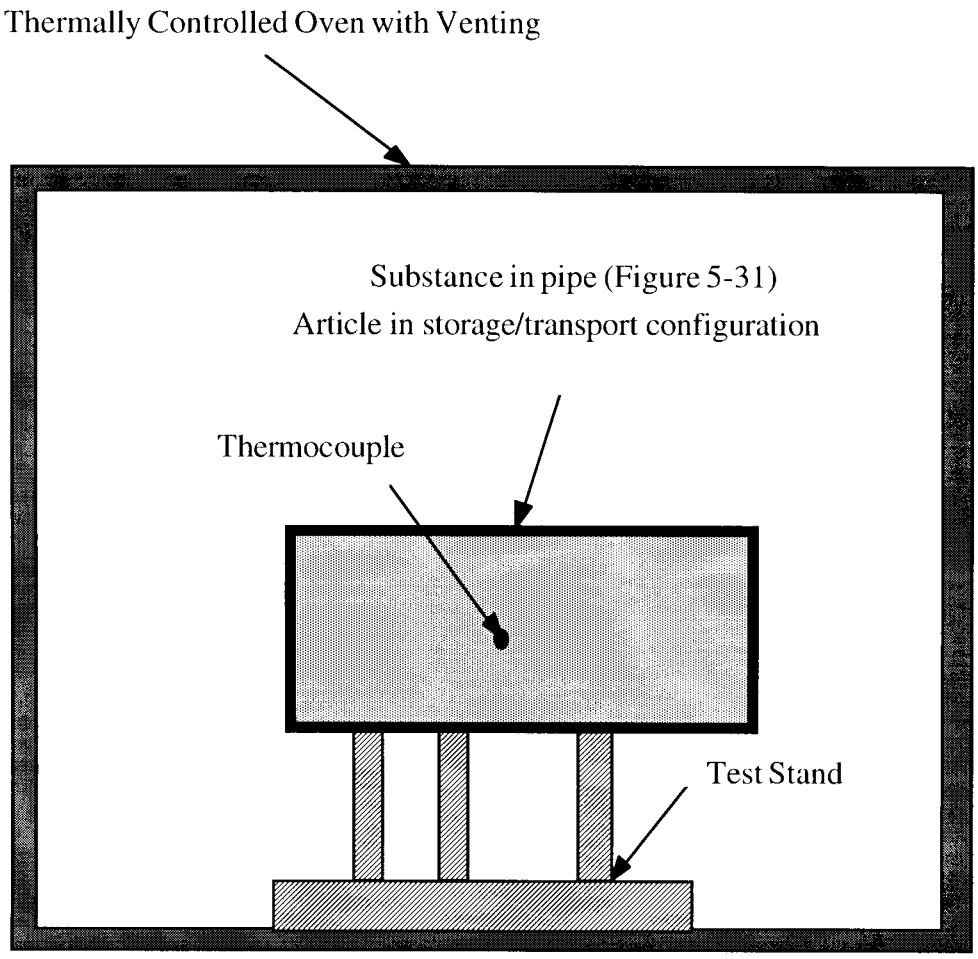

NOT TO SCALE

See Paragraphs 5-8.*g* and 5-8.*j*.

Figure 5-34. EIDS slow cookoff test—UN Test 7(f) and 1.6 article slow cookoff test —UN Test 7(h)

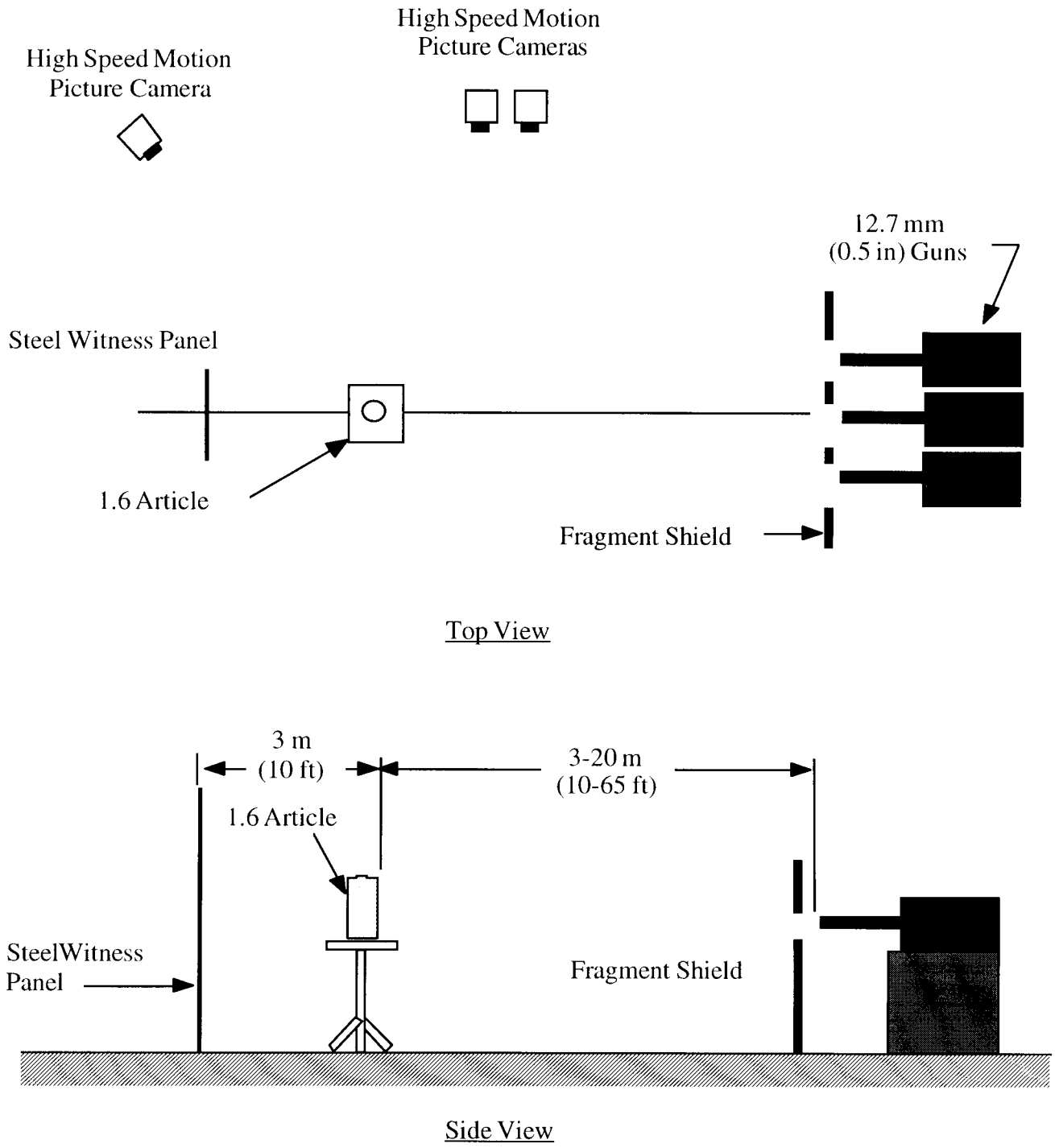

NOT TO SCALE

See Paragraph 5-8.*j*.

Figure 5-35. 1.6 multiple bullet impact test arrangement—UN Test 7(j)

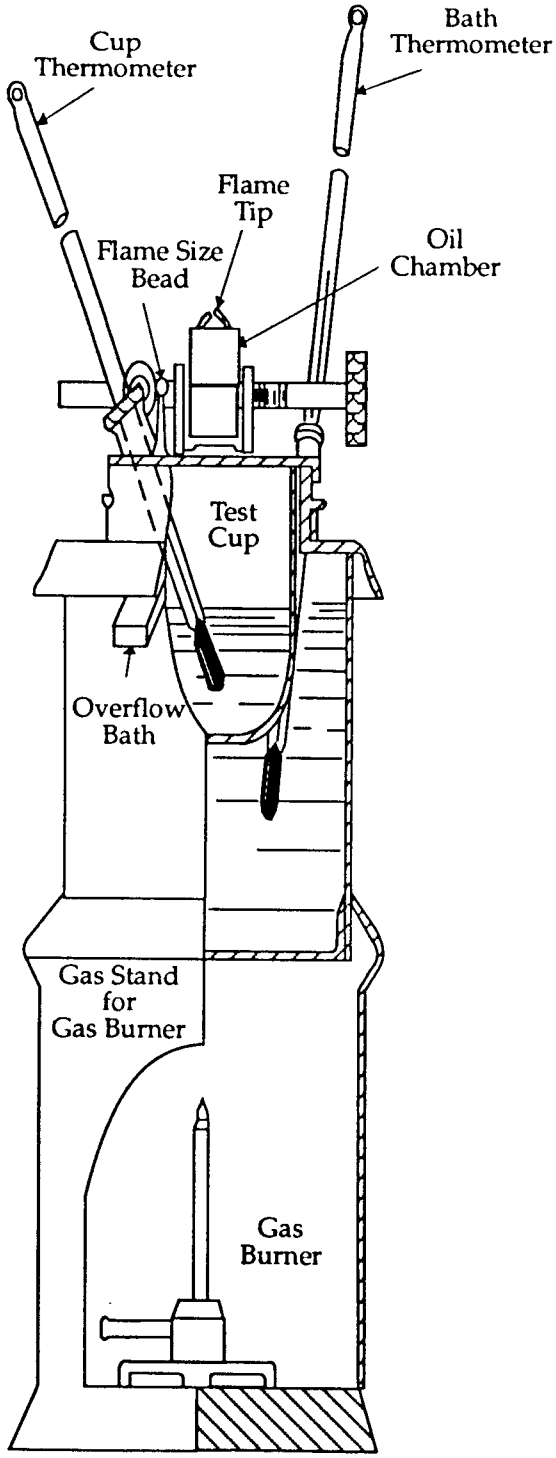

NOT TO SCALE

See Paragraph 5-9.*a*.

Figure 5-36. Tag closed vessel

Chapter 6
Instrumentation, interpretation of results and alternate tests

6–1. Introduction

This chapter specifies minimum requirements for instruments and equipment for measurement of airblast pressure, fragment dispersal, thermal flux, and firebrands associated with tests prescribed in chapter 5, and interpretation of the results in order to assign the proper hazard division. Minimum requirements for data analysis and reporting are also specified. In addition, acceptable alternate test procedures are presented.

a. Blast pressure measurements are to be used for the determination of a net explosive weight for quantity distance (NEWQD) (see paras 4–9*d* and 6–2) of configurations of reactive materials in ammunition as they are packaged and stored, or of ammunition constituents whose contribution to the total energy release in a single event is not known. For example, Hazard Division 1.3 material in assembled ammunition may contribute to the overall explosive yield.

b. Observations of fragment dispersal, areal density (see para 6–3*b*), and individual weights are necessary for the determination of minimum separation distances consistent with established criteria for fragment hazards to personnel.

c. Measurements of the thermal radiation field (thermal flux) and observations of firebrands are used to determine the maximum separation distance for Hazard Divisions 1.3 and 1.4 materials consistent with established criteria for thermal hazards for personnel and fire propagation by firebrands.

d. Alternate test procedures that are acceptable to the DoD Hazard Classifiers are presented at the end of this chapter. These alternate tests for purposes of hazard classification are taken from modified Tri-Service test protocols for qualification and weapons systems safety.

6–2. Blast measurements

a. Blast parameters.

(1) Blast output is to be evaluated with reference to the classical explosive blast waveform illustrated in Figure 6–1. Parameters defining the waveform and indicated in the figure include—

(a) Peak or maximum overpressure that occurs at the instant of pulse arrival in the classical waveform.

(b) Positive phase duration, or the interval between shock arrival and the time, at which the overpressure returns to zero.

(c) Positive phase impulse defined as the integral of the overpressure from the time of shock arrival to the end of the positive phase.

(2) The pressure and impulse are used to compute values of NEWQD to represent the amount of material under consideration.

b. Data acquisition system. A system for measuring and recording blast overpressure as a function of time consists of a transducer, signal conditioning equipment appropriate to the transducer type, and recording and reproduction devices. The transducer may be any one of a variety of electromechanical or electronic types having a frequency response adequate to resolve the blast pressure pulse. For purposes of NEWQD determination, for items whose net explosive weights are below 1000 kg, the basic data acquisition system should have a system frequency response of at least 0.01 Hz-20 kHz (see App A, Ref 10).

c. Transducer deployment and calibration. For any test that is expected to produce an overpressure pulse, pressure transducers will be positioned so as to detect the free-field overpressure at distances where it is expected to attain the levels 70, 35, 7, and 3.5 kPa (10, 5, 1, 0.5 psi) based on a pre-test estimate of the yield. Two lines of transducers will be employed. These will be positioned at least 90° apart. If the test item has a line of symmetry, one line of transducers should be placed along this line.

(1) The gauges will be mounted flush with the ground surface or, alternatively, in above-ground fixtures designed to minimize obstruction of the flow, with the sensing face of each gauge parallel to the direction of flow.

(2) The gauges will have been calibrated prior to the tests, and the testing activity is responsible for continually maintaining up-to-date dynamic calibration data for gauges, utilizing laboratory procedures appropriate to the transducer type.

(3) An electronic calibration pulse of amplitude simulating that of the anticipated peak pressure will be recorded immediately before each test.

d. Data analysis. Pressure-time records will be analyzed to determine peak pressures and positive phase impulses.

(1) The barometric pressure, ambient air temperature, and wind velocity and direction at the time of the test will be recorded and reported. These values will be used to convert the measured distances, times, pressures, and impulses to Standard or Sea Level Conditions (atmospheric pressure of 101.36 kPa (14.7 psi), atmospheric temperature of 288.16° K (15°C).

(2) The following equations will be used to make the conversion:

(a) $P_{SL} = P_{TS} \times F_P$

(b) $R_{SL} = R_{TS} \times F_R$

(c) $T_{SL} = T_{TS} \times F_T$

(d) $I_{SL} = I_{TS} \times F_I$

where P is pressure, R is distance, T is time, I is impulse; the subscript SL and TS refer to sea level or standard conditions and to measurements made at the test site, respectively.

(3) The four factors F_P, F_R, F_T, and $F_I$are defined as follows:

(a) $F_P = (P_{SL}/P_{TS})$

(b) $F_R = (P_{TS}/P_{SL})^{1/3}$

(c) $F_T = (P_{TS}/P_{SL})^{1/3} \times (T_{SL}/T_{TS})^{1/2}$

(d) $F_I = (P_{SL}/P_{TS})^{2/3} \times (T_{SL}/T_{TS})^{1/2}$

where P is barometric pressure and T is absolute atmospheric temperature. As defined above $P_{SL}$is 101.36 kPa (14.7 psi) and $T_{SL}$is 288.16° K (15°C).

(4) Two sets of blast measurements should be reported—those taken at the test site and the test site measurements converted to standard conditions.

e. Data interpretation. Any observed anomalies in the recorded data that cannot be attributed simply to instrument malfunction will be noted. In the event that a systematic, substantial difference of the waveform from the classical shape in Figure 6–1 is observed, such as the absence of an initial peak, the peak pressure calculations for NEWQD described below may be dispensed with in favor of a presentation of the records themselves together with an analysis. If no anomalies are observed, the pressure-distance and impulse-distance data which have been converted to standard conditions will be analyzed to determine NEWQD (this procedure is described below). These values of NEWQD will be reported. Reports of tests of complete rounds of ammunition which result in the assignment to Hazard Division 1.1 will include data on equivalence of included Hazard Division 1.3 components such as propelling charges.

f. Effective explosive weight (EEW). The EEW of a particular explosive, device, event, stack, etc., is the weight of TNT (hemispherical TNT surface burst, Fig 6–2) required to produce a selected shockwave parameter of equal magnitude to that produced by a unit weight of the material under test. A given material will have several EEW's depending on the shockwave parameter selected.

(1) Expressed as a ratio of the weight of the material under test to that of TNT in Figure 6–2, the EEW of an explosive more powerful than TNT is greater than unity; the EEW of one less powerful is less than unity. Under this definition, the values of EEW determined respectively on the basis of the pressure and the impulse measured at a given location may differ, and both will be functions of distance, geometry, or donor configuration.

(2) Hence, the general concept of EEW has significance only if the observed waveform is generally similar to the classical form shown in Figure 6–1 and if the geometry of the test material is similar to that of the TNT standard in Figure 6–2. For strictly hazard classification purposes, the EEW of a material is the weight of a bare TNT hemisphere on flat ground (App A, Ref 11) that produces the same free-field overpressure or impulse at a given distance from the test article.

(3) Peak overpressure and scaled positive phase impulse (impulse (I) divided by the cube root of charge weight (W)) for a bare TNT hemisphere are given in Figure 6–2 as a function of the scaled

range—the actual distance (R) from the charge center, divided by the cube root of charge weight (W). Table 6–1 presents the equations which were used to generate these curves. NOTE: These equations are simplifications of those appearing in the Kingery and Bulmash reference (App A, Ref 11). They are accurate to within 0.2% of the full Kingery equations.

(4) EEW based on peak pressure is defined as follows:

$$EEW\ (pressure) = (R_{article}/R_{standard})^3\ p = constant$$

that is, for each pressure level of interest, the EEW (pressure) is the cube of the ratio of the distances (article and standard) at which that pressure occurs.

(5) EEW based on impulse is defined as follows: Since both impulse and distance are scaled according to the cube root of the explosive weight, finding the point on the standard impulse-distance curve corresponding to a measured value from the test data means finding the intersection of a line of slope one (on a log-log plot) passing through the test data and intersecting the standard curve. Either the cube of the ratio of the impulse for the intersection point with that for the standard curve or the cube of the ratio of the ground ranges provides the EEW (impulse) at that point.

$$EEW\ (impulse) = (I_{article}/I_{standard})^3 \text{ or } (R_{article}/R_{standard})^3$$

Note. Ratios taken along a line with slope of one on a log-log plot.

(6) As described above, both EEW's are functions of scaled range. The EEW's should be reported in both graphical and tabular form as a function of the scaled range. In addition, an average EEW based on each parameter should also be reported.

(7) The $(EEW)_{MAX}$ is the higher of the EEW's determined for peak overpressure and positive phase impulse, each averaged over the range 70–3.5 kPa (10–0.5 psi) for the geometry of the donor munition.

(8) The NEWQD is the $(EEW)_{MAX}$ (see para 6–2*f*(7) above) for the ammunition (including Hazard Division 1.1 and Hazard Division 1.3 contributions) minus the $(EEW)_{MAX}$ for only the Hazard Division 1.1 component of the ammunition, and then added to the HEW (see para 4–9*a*) for the ammunition.

(9) Sometimes, based on physical evidence, it is possible to reach the conclusion that division 1.3 material did not contribute to the detonation reaction of division 1.1 material in an ammunition item. For example, a high explosive warhead detonation might project the rocket motor a short distance away where the propellant grain subsequently burns out. If the rocket motor case is substantially intact, showing no evidence of an internal detonation-type reaction, the NEWQD may be set equal to the high explosive weight (HEW) of the warhead. Similarly, recovery of all or a substantial portion of an unreacted rocket motor grain or propelling charge may establish non-contribution. For this reason, it may be prudent to conduct testing of an all-up-round or cartridge before testing the high explosive component alone.

6–3. Fragment hazard assessment

a. Introduction. The evaluation of fragment hazard effects is conducted as an adjunct to the Single Package (6(a)), Stack Test (6(b)) and/or the External Fire Test (6(c)). Two methods can be used:

(1) Near field fragment sampling using collection media and velocity measurement or

(2) Fragment collection from the ground plane. The selection of the appropriate method depends on the article being evaluated (Hazard Division 1.1 or 1.2) and the resources and expertise of the testing activity.

Note. Note that the "Method 1" approach described in the previous edition of this publication (dated Dec '89), and the analytical procedures based on that method, remains valid and may be used for hazardous fragment distance determinations in lieu of the Method 1 described below.

b. Hazardous fragment. Under currently applicable explosives safety standards, a fragment hazardous to personnel in the open is defined as one whose kinetic energy at impact exceeds 79 J (58 ft-lb). An areal density of such fragments not exceeding one per 55.7 m^2 (600 ft^2) is considered acceptable.

c. Firebrands. The probability of a hit is dependent on fragment density in the same way as other fragments. However, injury or damage may result from the thermal and chemical energy content of the firebrand as well.

d. Fragment field sampling. Fragment field sampling will be accomplished using one of two methods, based on the results of single package testing.

(1) Method 1 for fragment field sampling—Single package test indicates there is a risk of mass detonation (Hazard Division 1.1 classification expected).

(a) This method is generally used for Hazard Division 1.1. articles and requires the characterization of the fragment distribution (mass, number, shape and velocity) resulting from the initiation of a single package of articles. Custom designed and constructed fragmentation arenas are used to measure these parameters. Typical construction utilizes steel plates and high speed motion picture cameras to measure fragment velocity and fiberboard collection material to capture fragments. Velocity measurement and fragment collection are accomplished as a function of ejection zone measured around the vertical axis of the package. The mass, presented area and velocity data for all fragments weighing more than 20 g (310 grains) are used as input to a simulation model FRAGHAZ (App A, Ref 12) which computes the Q–D requirements using a Monte Carlo simulation routine.

(b) It has been demonstrated that packages of Hazard Division 1.1 articles may form high density, enhanced velocity (as compared to single units) concentrations of fragments when detonated. These fragment concentrations result from the collision and interaction of fragments from adjacent articles in the package. They will produce the highest safety concern and must be characterized. It is recommended that a 360° steel plate arena similar to the one illustrated in Figure 6–3 be used to determine the position of interaction areas for the package being evaluated. The center of the package should be positioned at the geometric center of the arena. The height of the package should also be centered on the steel plates. The distance from the steel plates to the package is determined by—

$$R_p = 2*EEW^{1/3}$$

where R_p = distance between the package and steel plates (m)

and

EEW = effective explosive weight (kg)

The outside surface of the witness plates should be marked in ten degree azimuthal zones using—

$$\theta = 2\ \pi\ R_p/36$$

where θ = width of ten degree zone (m)

A single article within the package should be initiated. Determination of the unit which will produce the most hazardous fragmentation effects may require several tests for a package which contains more than one non-symmetrical detonation source. The velocity of the fragments should be measured using high-speed motion picture cameras positioned to observe the outside surface of the witness plates. The average velocity of each fragment striking the witness panel is determined by dividing the distance to the plate by the time of flight of the fragment.

(c) The design of the Fragment Collection arena is based upon the position of the fragment interaction areas measured by the Density/Velocity arena. The azimuthal zone containing the most dense, highest velocity fragments should be characterized using bundles of fiberboard panels. Each panel is 12.7 mm (0.5 in) thick, 1.2 m (4 ft) wide by 2.4 m (8 ft) tall. Nintey six panels are banded together to form a bundle. The collection bundles are positioned at a distance which will prevent severe blast damage using—

$$R_c = 4*EEW^{1/3}$$

where R_c = distance to the recovery bundles (m)

(d) The number of collection bundles required is determined by—

$$N = (2 \pi R_C/36)*42$$

(e) The collection arena should be constructed by setting the outside edge of the first collection bundle on the zero degree position of the arena as shown in Figure 6–4. The remaining bundles are positioned at radius R_C. The use of fragment ricochet traps is required to prevent fragments which impact the ground from subsequently impacting the witness plates.

(f) The package should be positioned in the center of the arena with the vertical axis of the package horizontal (i.e., packages shipped with the articles vertical should be tested horizontally and vice versa). The article which produces the highest fragment density and velocity in the Density/Velocity arena should be detonated.

(g) Fragments collected in the bundles should be recovered using the X-Y coordinate system shown in Figure 6–5. These coordinates are used by the FRAGHAZ (App A, Ref 12) model to calculate the fragment ejection zone. The fragments recovered from the collection bundles should be weighed and those weighing greater than 20 g (310 grains) should have their average presented area measured. The fragment weight, presented area, X–Y coordinates, and velocity are recorded in the format shown in Table 6–2 and are used as input to the FRAGHAZ model.

Table 6–2
Fragment data requirements

X–Y coordinates	Weight	Presented area	Velocity
(cm)	(g)	(cm^2)	(m/s)
_____	_____	_____	_____
_____	_____	_____	_____

(h) The fragmentation data collected (Table 6–2 above) are used as input to the FRAGHAZ computer program to compute the hazardous fragment areal number density distributions as a function of the number of packages/articles. The program output provides a relationship between the number of packages/articles which can be stored at a particular location and the fragment hazard range. The program utilizes the hazardous density and kinetic energy criteria (para 6–3*b*) with fragment trajectory simulations to compute the fragment hazard range for the packages/articles being evaluated.

(2) Method 2 for fragment field sampling. Single package test indicates that a risk of mass detonation need not be considered (Hazard Division 1.2 classification expected).

(a) Fragment dispersion resulting from Test 6(b) or 6(c) will be determined by visual search of surface areas within three separate 5-degree sectors, parallel and perpendicular to the longitudinal axis of the test stack, with a common point of origin at the center of the stack as shown in Figure 6–6.

(b) Sectors will be divided radially into 60 m (200 ft) wide cells out to a distance of 420 m (1400 ft), unless there are indications from other tests or data that the fragment hazard is likely to extend beyond 420 m (1,400 ft).

(c) Visual searches of these sectors will begin at the point of origin.

(d) The number of fragments found by visual search of the 5-degree sector will be reported for each 60 m (200 ft) radial increment. If fragments are observed beyond the farthest cell in a sector (generally, beyond 420 m (1400 ft)), they will be identified in the test report by size and location.

(e) The required distance for protection from hazardous fragments will be that distance immediately beyond which cells in all the search sectors contain no fragments with weights greater than 25 g (385 grains).

(f) Test reports for each of the above fragment field sampling methods will include a plan view of the test area, showing test stack dimensions and the orientation of individual units in the stack, as well as the locations of recovery packs or search sectors. The locations of any major pieces of debris, unexploded weapons or components, and unusually large fragments not collected or counted should also be reported.

(g) See paragraph 6–6 for alternate test procedures and interpretations for characterizing the fragment hazard for Hazard Division 1.2 items.

6–4. Thermal effects assessment

a. Thermal effects parameters (for Hazard Divisions 1.3 and 1.4 ammunition). For hazard evaluation purposes, the thermal effects produced by the External Fire Test 6(c) will be characterized by two parameters: The radiation field and firebrands. These properties will be determined in the following ways using ammunition items in their standard storage configuration and in their shipping containers:

(1) Thermal radiation fields. The data to be derived will be used to establish the intensity, duration, and spatial characteristics as functions of material, size of combustion zone, and burning rate, all of which extend to the distance representing that required to obtain an irradiance of 4 kw/m^2(9.55 x 10^{-2}g-cal/cm^2-sec) for a Test 6(c) mass corrected to 100 kg (220 lb) net explosive content.

(2) Firebrands. The data to be derived will be used to establish the spatial distribution (number per unit area), thermal capacity, and size of the emitted brands as functions of material and fire characteristics.

b. Thermal effects data acquisition system.

(1) Thermal flux test criteria. The ammunition thermal effects tests are to be conducted when the wind speed is 6 m/s (13 mi/h) or less in the absence of precipitation or dust storms. Uniform ignition around the periphery of the thermal source material will be accomplished with a standard igniter that will not perturb the thermal measurements.

(a) The thermal flux will be determined using appropriate radiometers with a range which includes 4 kw/m^2(9.55 x 10^{-2}g-cal/cm^2-sec).

1. The temporal and spatial characteristics of the radiation field will be measured with a series of radiometers. A minimum of three radiometers will be used in a line from the source in each of at least two perpendicular directions.

2. The second station from the source in each direction will incorporate a radiometer capable of measuring thermal energy in the range of 4 kw/m^2(9.55 x 10^{-2}g-cal/cm^2-sec) (App A, Ref 13).

3. Calibration tests can be used to provide guidance on the total range and location of the radiometers.

(b) Time-lapse color photography using one picture every two seconds is generally considered adequate to document the size of the thermal source and the combustion zone. A more rapid rate might be necessary for some ammunition items as determined in the calibration tests.

(c) The scaling relationship $(mass)^{2/3}/(distance)^2$given in the Hay and Watson reference (App A, Ref 13) can be used to determine the flux at 15 m (50 ft) for 100 kg (220 lb) of material and record.

(2) Firebrand test criteria. Firebrand effects are to be documented in the horizontal and elevation views from the burning source material. The same test conditions as specified for the thermal flux test will be used simultaneously for the firebrand tests except for the instrumentation. It is anticipated that firebrand test instrumentation may utilize remote viewing with infrared scanners, and the measurement of firebrand effects may utilize the melting of plastic sheets or the charring of wood panels.

6–5. Interpretation of results

a. General. Results of tests evaluated with respect to the pass/fail ("-"/"+") criteria given in Chapter 5 will be recorded on forms shown by example in Figures 6–7 and 6–8 given at the end of this chapter. The results are interpreted as follows:

(1) Classification. The ammunition should be classified in the light of the test results and of other relevant data according to the characteristics of the hazard division as indicated below.

(a) Sometimes, the observed hazard effects vary among replicate tests or may not correspond exactly to the definitions. When this

occurs, the DODC should use its judgment or arrange for further testing.

(b) It is prudent to err on the side of caution, particularly in the crucial decision as to whether or not a product is susceptible to mass detonation.

(c) Based on results obtained from the tests given in Chapter 5, the appropriate hazard division compatibility group can be assigned. Additionally, the appropriate UN Serial Number is determined by referring to appropriate lists of UN Numbers (see para 4–8).

(2) Airblast effects. For articles that mass detonate (Hazard Division 1.1), the NEWQD (para 6–2(f)(8)) up to 100% of the actual weight of the active ingredients will be used. For protective construction design purposes, the explosive equivalence without limitation will be used. Note that the terms "detonation," "explosion," and "deflagration" which are used as reaction descriptors for test responses that may be associated with airblast effects are defined in Chapter 2.

(3) Minimum hazardous fragment distance. Note that the minimum hazardous fragment distance (for one item) for Hazard Divisions 1.1, 1.2, and 1.3, as determined by testing, is specified in 100-ft units in parentheses preceding the hazard division designation; for example, Hazard Division (12) 1.2 indicates that the minimum fragment distance is 1200 ft for this item. Also, specification of the minimum fragment distance is required for all Hazard Division 1.2 items.

(a) For articles that mass detonate (Hazard Division 1.1), the minimum distance for personnel in the open (inhabited building) for fragment protection will be 381 m (1250 ft) unless another distance is determined by tests. For operations in which variable numbers of units* are handled, a graduated distance is permitted when the article has been adequately evaluated to determine if the distance for the minimum hazardous fragment density requirement as given in paragraph 6–3*b* and in DoD 6055.9–STD (App A, Ref 1) is less than 381m (1250 ft) for the number of units per operation. (See the report on FRAGHAZ (App A, Ref 12) in the Method 1 discussion given in paragraph 6–3*d*(1)(a)). The results of the fragment analysis will be noted in the test documentation.

Note. *A unit is to be one article for unpackaged items such as bombs or one outer package of articles for items such as fuzes. If an operation involves palletized articles, then the unit shall be considered to be a pallet load.

(b) For articles that do not mass detonate but present a fragment hazard (Hazard Division 1.2), the inhabited building distance is equated to the minimum hazardous fragment distance as determined by Method 2 (para 6–3*d*(2)) or by alternate test methods given in paragraph 6–6*b*.

(4) Thermal effects. For items that present a mass or moderate fire hazard (Hazard Division 1.3 and 1.4, respectively), firebrand throw distances and thermal flux measurements are used to characterize the hazards and determine the hazard division.

(a) The firebrand throw distance for Hazard Division 1.4 may not exceed 15 m (50 ft); otherwise, the item is classified as Hazard Division 1.3.

(b) The irradiance for a burning Hazard Division 1.4 item may not exceed that of the fire by more than 4 kw/m^2(9.55 x 10^{-2}g-cal/cm^2-sec) at a distance of 15 m (50 ft) from the edge of the Test 6(c) stack for a mass corrected to 100 kg (220 lb) net explosive content (see para 5–7c(4)(c) 3) otherwise, the item is Hazard Division 1.3.

b. Summary of test criteria and method of assessing results. The requirements summarized and referenced below are minimum for assignment of articles and materials into the appropriate hazard division. Test Series 3 tests are used to determine if a substance is forbidden for transport. Test Series 4 tests are used to determine if items with substances that failed Test Series 3 tests or new articles are forbidden for transport (see note for para 5–1*b*(3)(b)). Test Series 6 tests are used to determine whether the item is classified Hazard Division 1.1, 1.2, 1.3 or 1.4; Test Series 5 for Hazard Division 1.5; and Test Series 7 for Hazard Division 1.6. See paragraph entitled "Criteria and Method of Assessing Results"associated with each test in Chapter 5 for more details.

(1) Forbidden for transport.

(a) A substance is forbidden for transport if:

1. The solid or liquid substance is considered impact sensitive (see para 5–4*a*(4)) at a drop height of 10.16 cm (4.0 in) for solids and 25.4 cm (10.0 in) for liquids in the Bureau of Explosives Impact Machine Test 3(a)(i) (10 trials); and/or

2. The solid or liquid substance is considered friction sensitive if any of the following results are obtained from the ABL Friction Test 3(b) (iii)—visible sparks/flame, audible explosion, loud crackling noise, or detection of reaction products by a gas analyzer for a friction sensitiveness equal to or greater than dry PETN (see para 5–4*b*(4)); and/or

3. The solid or liquid substance is considered thermally unstable in the Thermal Stability Test at 75°C (Test 3(c)); that is, the substance ignites or explodes, or the substance experiences self-heating of 3°C or greater; and/or

4. The solid or liquid substance explodes or detonates in the Small-Scale Burning Test 3(d) (i).

(b) An article, packaged article, or a packaged substance is forbidden for transport if:

1. The Thermal Stability Test for Articles and Packaged Articles (Test 4(a)) (does not apply to packaged substances) results in an explosion, ignition, generation of colored fumes or odors, temperature rise exceeding 3°C experienced, or the outside casing of the package or the outside packaging is damaged; and/or

2. The Steel Tube Drop Test for Liquids (Test 4(b) (i)) results in a detonation for a drop of less than 5 m (197 in). If a local reaction occurs for a drop less than 5 m (197 in) then transport in metal packaging is prohibited unless suitability for transport can be demonstrated.

3. The Twelve Meter Drop Test for Articles and Solid Substances (Test 4(b) (ii)) (three drops with separate units) results in a fire or explosion (rupture of the package is acceptable). (NOTE: A substance that fails Tests 3(a) (i), 3(b) (iii), or 3(d) (i) may be repackaged to pass Test 4(b) (ii) to allow transport; however, substances that fail Test 3(c) are forbidden for transport regardless of packaging.)

(2) Hazard Division 1.1.

(a) Explosion of total contents (see para 5–7a(4)) in the Single Package Test 6(a) indicates a candidate for Hazard Division 1.1.

(b) If the product is accepted as Hazard Division 1.1 and the minimum hazardous fragment hazard distance does not exceed the default value of 381m (1250 ft) given in paragraph 6–5*a*(3)(a) above, then testing beyond the Single Package Test 6(a) or the Stack Test 6(b) is not necessary.

(c) If the explosion of total contents (see para 5–7*b*(4)) appears to occur almost instantaneously in either the Stack Test 6(b) or the External Fire (Bonfire) Test 6(c), then the item is assigned Hazard Division 1.1.

(3) Hazard Division 1.2. The item is assigned Hazard Division 1.2 if an explosion reaction (see Glossary) results in one or more of the following events:

(a) Explosion of total contents (see para 5–7*b*(4)) does not occur in either the Stack Test 6(b) or the External Fire (Bonfire) Test 6(c); and/or (NOTE: If two or less acceptor packages detonate in a confined stack test with four acceptor packages or more, then the packaged article can be hazard classified as Hazard Division 1.2; otherwise, it is hazard classified as Hazard Division 1.1.)

(b) Debris from the event perforates any of the three aluminum witness plates in Test 6(c); and/or

(c) More than 10 metallic projections, each with mass exceeding 25 g (385 grains), are thrown more than 50 m (165 ft) from the edge of the Test 6(c) stack; and/or

(d) Any metallic projection with mass exceeding 150 g (2300 grains) is thrown more than 15 m (50 ft) from the edge of the Test 6(c) stack.

(4) Unit risk Hazard Division 1.2. For storage application a special category of Hazard Division 1.2, unit risk, has been designated (DoD 6055.9–STD, Chap 9, para C.2.a) (App A, Ref 1). The minimum hazardous fragment distance for this category is determined using the areal number density criteria given in paragraph 6–3*b*.

Ammunition is categorized as Unit Risk Hazard Division 1.2 based on the following test results:

(a) No sympathetic detonation response in the Stack Test 6(b) or the 1.6 Article Propagation Test 7(k); and

(b) No response occurs in the External Fire (Bonfire) Test 6(c) or the 1.6 Article External Fire Test 7(g) which would require that the article be confined to Hazard Divisions 1.1, 1.2 or 1.3; and

(c) No detonation (or explosion) response in the 1.6 Article Bullet Impact Test 7(j); and

(d) No reaction more severe than burning (see para 5–8*i*(4) in the 1.6 Article Slow Cookoff Test 7(h).

(5) Hazard Division 1.3. The packaged product is assigned to Hazard Division 1.3 if none of the events which would require the product to be assigned to hazard Division 1.1 or 1.2 occur and either

(a) A fireball extends beyond any of the witness screens in the External Fire (Bonfire) Test 6(c); and/or

(b) A jet of flame extends more than 3 m (10 ft) from the flames of the fire in Test 6(c); and/or

(c) The irradiance of the burning product exceeds the criteria specified in paragraph 6–5*a*(4)(b) above; and/or

(d) Fiery projections emanating from the product are thrown more than 15 m (50 ft) from the edge of the Test 6(c) stack.

(6) Hazard Division 1.4. The packaged product is assigned to Hazard Division 1.4 and to a compatibility group other than Compatibility Group S if none of the events occur which would require the product to be assigned to Hazard Divisions 1.1, 1.2, or 1.3 and either—

(a) Any indentation is observed on any of the three screens in the External Fire (Bonfire) Test 6(c); and/or

(b) A projection, thermal effect or blast effect is observed during the External Fire (Bonfire) Test 6(c) which would significantly hinder fire-fighting or other emergency response efforts in the immediate vicinity (5 m (15 ft)) of the package.

(7) Hazard Division 1.4 Compatibility Group S. The packaged product is assigned to Hazard Division 1.4S if—

(a) None of the events occur which would require the product to be assigned to Hazard Divisions 1.1, 1.2, 1.3, or to Hazard Division 1.4 (compatibility group other than Group S) or 1.6N.

(b) None of the projections, thermal effects or blast effects observed during the External Fire (Bonfire) Test 6(c) would significantly hinder fire-fighting or other emergency response efforts in the immediate vicinity (5 m (15 ft)) of the package.

Note. See paragraph 5–7*c*(4)(f) for criteria for excluding a product from Class 1 that has satisfied requirements for Hazard Division 1.4S.

(8) Hazard Division 1.5. A substance is assigned to Hazard Division 1.5 if—

(a) The substance is not "cap sensitive"(see para 5–6*a*(4)) in the Cap Sensitivity Test 5(a) (three trials); and/or

(b) A hole is not blown through the witness plate of the DDT Test 5(b) (ii) (three trials); and/or

(c) The substance does not explode (see para 5–6*c*(4)) in the External Fire Test for Hazard Division 1.5 (Test 5(c)); and/or

(d) The substance neither ignites and burns (mildly or vigorously) nor explodes at any time during five consecutive trials (different samples) of the Princess Incendiary Spark Test 5(d).

(9) Hazard Division 1.6. An article is assigned to Hazard Division 1.6 if it only contains EIDS (extremely insensitive detonating substances) and responds as indicated to the following substance (EIDS) and article (1.6) tests.

(a) The substance is considered EIDS if—

Note. EIDS must also pass Test Series 3 so as not to be forbidden for transport. See paragraph 6–5*b*(1) above.

1. The substance does not detonate in the EIDS Cap Test 7(a) (three trials); and

2. The substance does not detonate (punch a clean hole through the witness plate) in the EIDS Gap Test 7(b) (three trials) with the 70 mm (2.76 in) PMMA gap; and

3. The airblast, averaged over ten trials, at 3.05 m (10 ft) does not exceed 27 kPa (3.9 psi) for a 333 m/sec (1093 ft/sec impact in the Susan Impact Test 7(c) (i) – or – in the alternate Friability Test 7(c) (ii) (three trials) the average dp/dt is less than 15 MPa/ms (150 bars/ms); and

4. The substance does not explode nor detonate in the EIDS Bullet Impact Test 7(d) (i) (six trials) – or – in the alternate Friability Test 7(d) (ii) (three trials) the average dp/dt is less than 15 MPa/ms (150 bars/ms); and

5. The substance does not detonate nor react violently with a fragment of mass exceeding 1 g (15 grains) and range more than 15 m (50 ft) in the EIDS External Fire Test 7(e); and

6. The substance does not detonate nor react violently (fragmentation of one or two end caps and fragmentation of the tube into more than three pieces) in the EIDS Slow Cookoff Test 7(f) (three trials); and

(b) The article is considered a Hazard Division 1.6 article if it contains only EIDS and if—

1. None of the events occur during the 1.6 Article Fire Test 7(g) which would require the article to be assigned to Hazard Divisions 1.1, 1.2, or 1.3; and

2. The reaction is no more severe than burning (see para 5–8*i*(4)) in the 1.6 Article Slow Cookoff Test 7(h); and

3. There is not a detonation (or explosion) response (burning or deflagration responses are acceptable) in the 1.6 Article Bullet Impact Test 7(j); and

4. There is no sympathetic detonation response (see para 5–8*k*(4)) in the 1.6 Article Propagation Test 7(k).

c. Data recording. The substance and ammunition data forms shown by example in Figures 6–7 (DD Form 2738) and 6–8 (DD Form 2739), respectively, will be used to record the results of the hazard classification tests. DD Forms 2738 and 2739 will be reproduced on 8 1/2- by 11-inch paper. DD Forms 2738 and 2739 may be electronically generated, provided the content, format, and sequencing of each electronic version is consistent with the current approved edition. The electronically generated form will be identified by entering "EG"in parentheses, upper case, after the date of the form, i.e., DD Form 2738, JUL 96 (EG).

Note. An approved electronic copy of DD Forms 2738 and 2739 may be obtained from the web site: http://web1.whs.osd.mil/diorhome.htm.

6–6. Alternate tests

Alternate tests to be used for assigning hazard classification must be specifically referenced in the hazard classification data package for review using the administrative procedures provided in Chapter 3.

Note. Optional tests in the UN protocol (App A, Ref 6) are acceptable alternate tests.

a. Hazard Division 1.1.

(1) As an alternative to conducting the Method 1 test series (para 6–3*d*(1)), the Stack Test 6(b) (para 5–7*b*) may be conducted once without confinement in order to permit collection of fragment/airblast data without the attenuating effects of the confinement.

(2) When the end item will be assigned to Hazard Division 1.1 because of the risk of mass detonation, an iteration of the Stack Test 6(b) (para 5–7*b*) may be performed without confinement for fragment hazard analysis in place of the External Fire (Bonfire) Test 6(c) (para 5–7*c*). When the fragment hazard will be determined in this manner, and when necessary to assure detonation of the total contents of the stack, individual items will be primed for simultaneous detonation.

b. Hazard Division 1.2. The standard method for collecting and analyzing the minimum hazardous fragment distances based on the maximum hazardous fragment throw distances for Hazard Division 1.2 is Method 2 using an External Fire (Bonfire) Test 6(c) which is outlined in paragraph 6–3d(2). Inhabited building distance is equated to the minimum hazardous fragment distance. The following alternate test method results in a minimum fragment distance in 100-ft increments with a 200-ft minimum fragment distance.

(1) Test(s)—Conduct single unconfined Stack Test 6(b) and/or single Bonfire Test 6(c) with 360° fragment recovery.

(2) Minimum fragment distance—Determine the maximum hazardous fragment throw distance, round the distance up to the next

100-ft increment, and define as the minimum hazardous distance (inhabited building distance) for the ammunition item.

c. Hazard Division 1.3. Solid propellant rocket motors for which it is impractical to conduct the hazard classification tests given in Chapter 5 present special concerns. The following guidance for alternate testing is provided:

(1) The shock sensitivity of the propellants shall be measured at the diameter at which the material maintains a stable detonation (if at all) up to the web thickness for the rocket propellant or eight inches (super large-scale gap test), whichever dimension is less. The methodology is outlined in Figure 6–9.

(a) Gap Test for Solids and Liquids. Figure 5–7 presents a schematic of the Gap Test 2(a) (iii) with the 5.08 cm (2 in) PMMA gap. This test is employed with variable PMMA gaps to establish a stable detonation (if at all).

(b) EIDS Gap Test 7(b). Figure 5–26 presents a schematic of the EIDS Gap Test (with the 70 mm (2.76 in) PMMA gap shown)) which shall be used with a variable PMMA gap for substances which do not maintain a stable detonation in Test 2(a) (iii) with a zero gap.

(c) Super Large-Scale Gap Test (SLSGT). Figure 6–10 presents a schematic of the SLSGT (with a variable PMMA gap shown) which shall be used for substances which do not maintain a stable detonation in the Test 7(b) with a zero gap.

(d) Criteria. A solid rocket motor using this test protocol with propellants that maintain a stable detonation with any PMMA or zero gap with Test 2(a) (iii), Test 7(b), or the SLSGT (as appropriate) is hazard classified Hazard Division 1.1; otherwise, the rocket motor is a candidate for Hazard Division 1.3.

(2) Any accident data generated during large motor development that documents the propellant response is to be included in the hazard classification data package.

(3) Solid rocket motors should be tested singly (if transported singly) in the Bonfire Test 6(c); however, storage configurations may require that multiple items be tested.

(4) Motor firing data for ignition function is acceptable in lieu of single package hazard classification testing.

(5) Large rocket motor responses for conditions given in paragraphs 6–6*c*(2) through 6–6*c*(4) above that produce airblast and/or fragment hazards beyond the Hazard Division 1.3 quantity-distances given by Table 9–10 in DoD 6055.9–STD (App A, Ref 1) for the quantity of propellant involved are hazard classified Hazard Division 1.1 regardless of the results obtained using paragraph 6–6*c*(1)(d).

d. Qualification tests (MIL-STD–1751A) acceptable for hazard classification (App A, Ref 14). The following qualification tests specified in MIL–STD–1751A are acceptable alternate tests for hazard classification tests using pass/fail criteria provided in Chapter 5 herein:

(1) Test A–01.001 Impact Test (Laboratory Scale)—Bureau of Explosives Apparatus is an acceptable alternate test procedure for hazard classification Test 3(a) (i) (para 5–4*a*) with pass/fail criteria given in paragraph 5–4*a*(4).

(2) Test A–102.001 Friction Sensitivity—ABL Sliding Anvil Test is an acceptable alternate test procedure for hazard classification Test 3(b) (iii) (para 5–4b) with pass/fail criteria given in paragraph 5–4*b*(4).

(3) Test A–104.001 Large-Scale Gap NOL Method is an acceptable alternate test for Gap Test 2(a) (iii) as used for paragraphs 6–6*c*(1)(a) and 7–3*a*(1).

(4) Test A–104.003 Super Large Scale Gap Test is an acceptable alternate test procedure for the large solid rocket motor hazard classification Super Large Scale Gap Test (SLSGT) (para 6–6*c*(1)(c)) with criteria given in paragraph 6–6*c*(1)(d)). See Figure 6–10.

(5) Test A–104.004 Explosive Shock Sensitivity Test-Expanded Large Scale Gap Test NSWC Method is an acceptable alternate test procedure for hazard classification Test 7(b) (para 5–8*b*) with pass/fail criteria given in paragraph 5–8*b*(4) for a 70 mm (2.76 in) PMMA gap.

(6) Test A–105.001 Cap Test is an acceptable alternate test procedure for hazard classification Test 5(a) (para 5–6*a*) with pass/fail criteria given in paragraph 5–6*a*(4) and Test 7(a) (para 5–8*a*) with pass/fail criteria given in paragraph 5–8*a*(4).

(7) Test A–111.001 Thermal Stability is an acceptable alternate test procedure for hazard classification Test 3(c) (para 5–4*c*) with pass/fail criteria given in paragraph 5–4*c*(4).

e. Hazard assessment tests (MIL–STD–2105B) acceptable for hazard classification (App A, Ref 15). The following hazard assessment tests specified in MIL–STD–2105B are acceptable alternate test procedures (with noted additional requirements) for hazard classification tests using pass/fail criteria provided in Chapter 5 herein.

(1) The 40-Foot Drop Test is an acceptable alternate test procedure for hazard classification Test 4(b) (ii) (para 5–5*c* with pass/fail criteria given in paragraph 5–5*c*(4)).

(2) The Fast Cookoff Test is an acceptable alternate test procedure for hazard classification Test 6(c) (para 5–7*c*) and Test 7(g) (para 5–8*h*) with pass/fail criteria given in paragraphs 5–7*c*(4) and 5–8*h*(4), respectively if—

(a) Multiple items (three or number to satisfy the volume ”requirement in paragraph 5–7*c*(3)(b), whichever is greater) in the transport/storage configuration are tested;

(b) The fire lasts a minimum of 30 minutes (unless disrupted by an item test failure that results in a classification of Hazard Division 1.1 (para 5–7*c*(4)(a)); and

(c) Witness screens and radiometric measurements required in paragraph 5–7*c*(3)(h) and 5–7*c*(4)(c) 3, respectively, are used.

Note. Two Fast Cookoff Tests (satisfying criteria specified in para 6–6*e*(2)(b) and 6–6*e*(2)(c), above) are acceptable for one hazard classification Test 6(c) or 7(g) if the item response for each of the tests is a reaction no more severe than burning as defined in paragraph 5–8h(4). A reaction more severe than burning in any test would require that a test be conducted with a minimum of three items.

(3) The Slow Cookoff Test is an acceptable alternate test procedure for hazard classification Test 7(h) (para 5–8*i*) with pass/fail criteria given in paragraph 5–8*i*(4) if—

(a) The test item is in the transport/storage configuration;

(b) The temperature (linear rate of 3.3°C/hour) is controlled within +/- two percent up to 365°C; and

(c) Fragmentation data are collected.

(4) The Bullet Impact Test is an acceptable alternate test procedure for hazard classification Test 7(j) (para 5–8*j*) with pass/fail criteria given in paragraph 5–8*j*(4) if–

(a) The test item is in the transport/storage configuration;

(b) The firing rate for three 12.7 mm (0.5 in) rounds is 600 +/- 50 rounds/minute (100 ms +/- 9 ms between impact);

(c) The test item is secured in a holding device capable of restraining the item against dislodgement by the projectiles;

(d) The impacting armor-piercing rounds penetrate the most sensitive material(s) that are not separated from the main explosive charge by barriers or other safety devices;

(e) The rounds impact within a circular target area of 50 mm (2 in) diameter without passing through the same hole;

(f) The test is conducted three times (different orientations).

(5) The Sympathetic Detonation Test is an acceptable alternate test procedure for Test 6(b) (para 5–7*b*) and Test 7(k) (para 5–8*k*) with pass/fail criteria given in paragraphs 5–7*b*(4) and 5–8*k*(4), respectively if—

(a) The test items are in the transport/storage configuration;

(b) The test is conducted three times;

(c) One of the three 7(k) tests is conducted without confinement to allow collection of airblast and fragment/debris data. Note: One of the three 6(b) tests may be conducted without confinement. (See paras 6–3*d*(1) and 6–6*a*.)

Table 6–1
Hemispherical TNT surface burst--peak pressure and positive impulse

		PRESSURE, P (kPa) Equation constants			
RANGE,Z ($m/kg^{1/3}$)	A	B	C	D	E
0.2-2.9	7.2106	-2.1069	-0.3229	+0.1117	+0.0685
2.9-23.8	7.5938	-3.0523	+0.40977	+0.0261	-0.01267
23.8-198.5	6.0636	-1.4066	0	0	0

		PRESSURE, P (psi) Equation constants			
RANGE, Z ($ft/lb^{1/3}$)	A	B	C	D	E
0.5-7.25	6.9137	-1.4398	-.2815	-0.1416	+0.0685
7.25-60	8.8035	-3.7001	+0.2709	+0.0733	-0.0127
60-500	5.4233	-1.4066	0	0	0

		IMPULSE, I ($kPa\text{-}ms/kg^{1/3}$) Equation constants			
RANGE, Z ($m/kg^{1/3}$)	A	B	C	D	E
0.2-0.96	5.522	+1.117	+0.600	-0.292	-0.087
0.96-2.38	5.465	-0.308	-1.464	+1.362	-0.432
2.38-33.7	5.2749	-0.4677	-0.2499	+0.0588	-0.00554
33.7-158.7	5.9825	-1.062	0	0	0

		IMPULSE, I ($psi\text{-}ms/lb^{1/3}$) Equation constants			
RANGE, Z ($ft/lb^{1/3}$)	A	B	C	D	E
0.5-2.41	2.975	-0.466	+0.963	+0.030	-0.087
2.41-6.0	0.911	+7.260	-7.459	+2.960	-0.432
6.0-85	3.2484	+0.1633	-0.4416	+0.0793	-0.00554
85-400	4.7702	-1.062	0	0	0

Equation Form:

$$P,I = \exp(A+B*(Ln(Z))+C*(Ln(Z))^2+D*(Ln(Z))^3+E*(Ln(Z))^4)$$

P in kPa, Z in $m/kg^{1/3}$
P in psi, Z in $ft/lb^{1/3}$

I in $kPa\text{-}ms/kg^{1/3}$, Z in $m/kg^{1/3}$
I in $psi\text{-}ms/lb^{1/3}$,Z in $ft/lb^{1/3}$

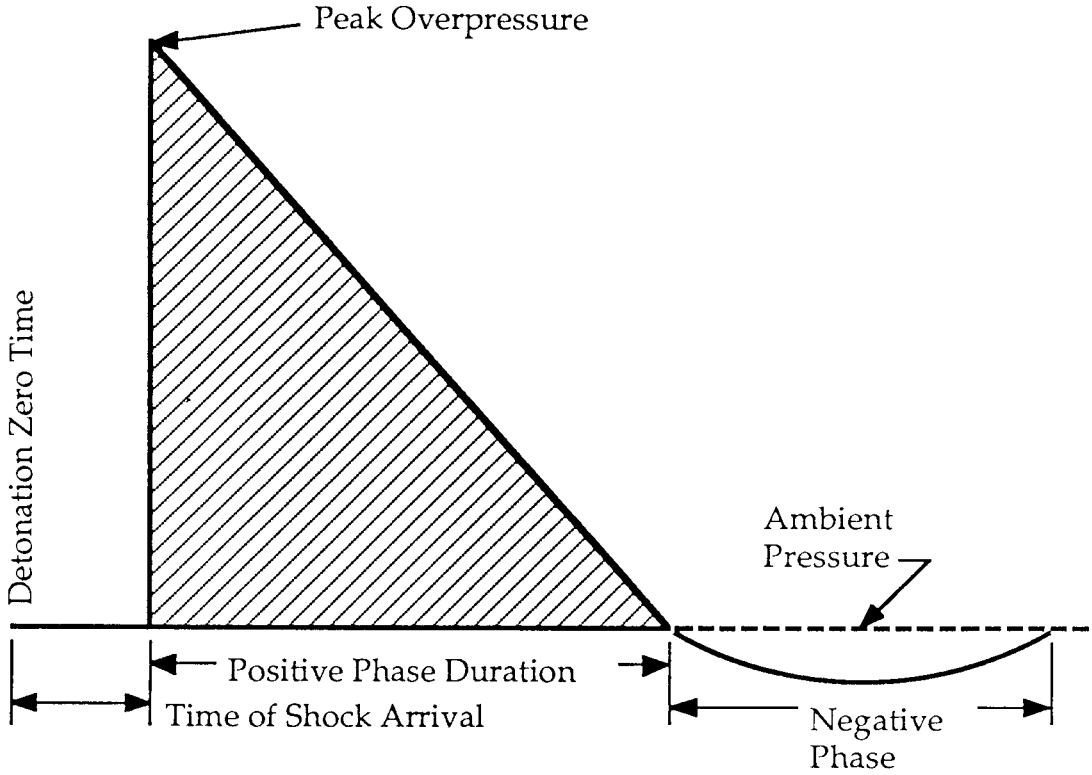

See Paragraph 6-2.*a*.

Figure 6-1. Idea overpressure vs. time history

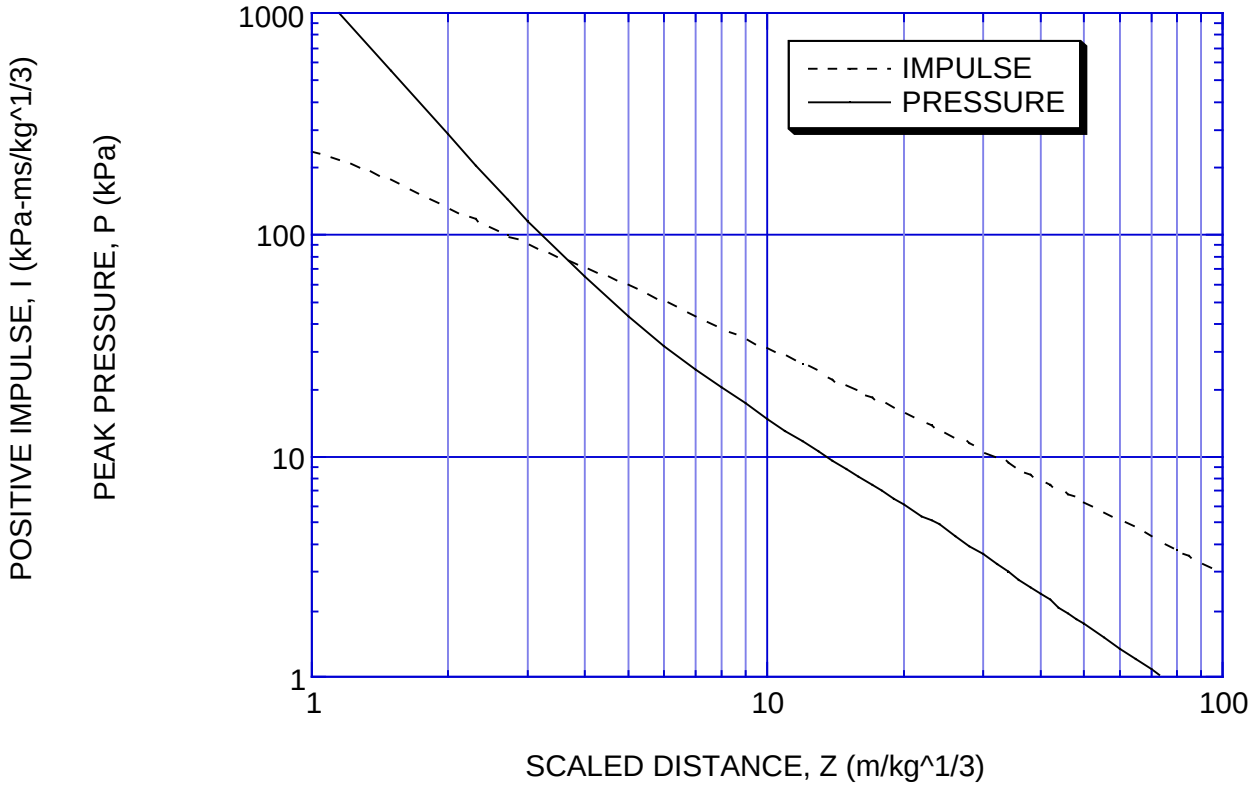

See Paragraph 6-2.*f*(3).

Figure 6-2. Hemispherical TNT surface burst—peak pressure and positive impulse

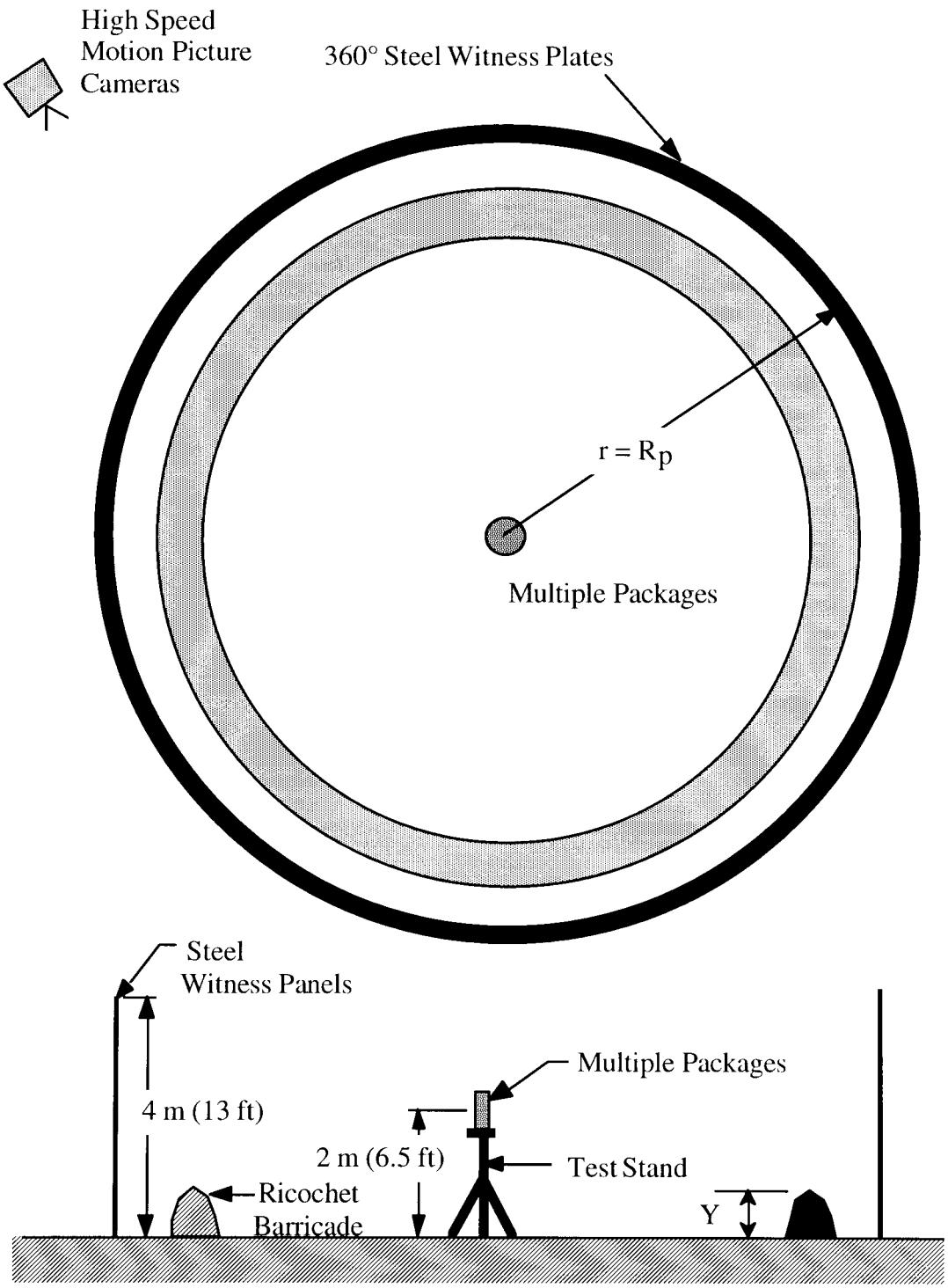

NOT TO SCALE

Notes: See Figure 6-4 for ricochet fence dimensions.
See Paragraph 6-3.*d*(1)(*b*).

Figure 6-3. Velocity/density arena configuration—method 1

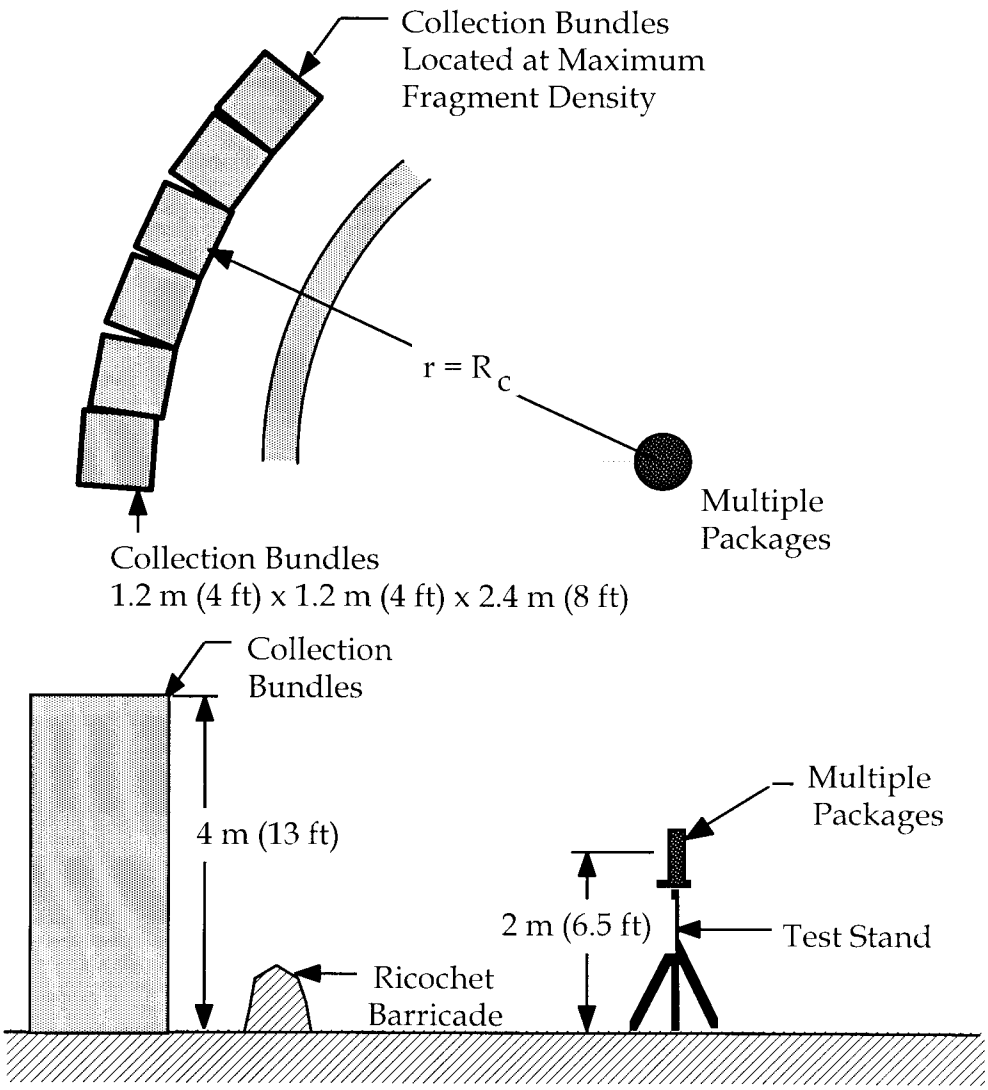

NOT TO SCALE

Distance to ricochet fence

	r	=	2KCHD/(C+K)
where	r	=	radius to center of ricochet fence from center of test item
	D	=	distance to fiberboard or witness plate from center of test item
	H	=	height of center of test item above ground
	K	=	1/(H-h)
where	h	=	distance between ground and bottom of fiberboard or witness plate
	C	=	1/(H+h+L)
where	L	=	length of fiberboard or witness plate

Height of ricochet fence

	Y	=	H(K-C)/(C+K)
where	Y	=	height of ricochet fence at radius r
	K	=	1/(H-h)

See Paragraph 6-3.*d*(1)*(e)*.

Figure 6-4. Fragmentation characterization arena—method 1

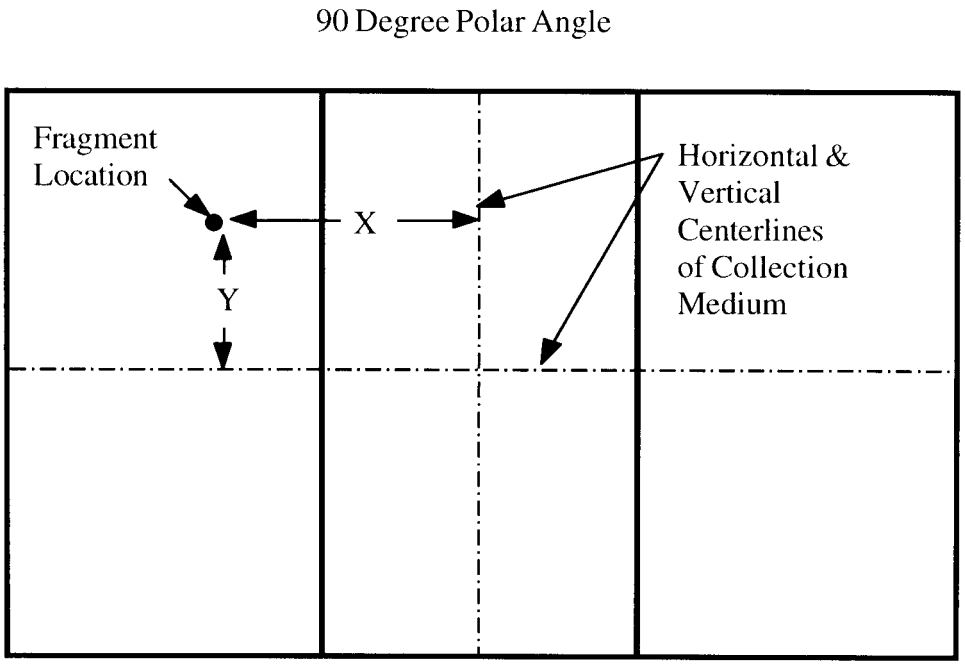

See Paragraph 6-3.*d*(1)(*g*).

Figure 6-5. Fragment collection coordinate system—method 1

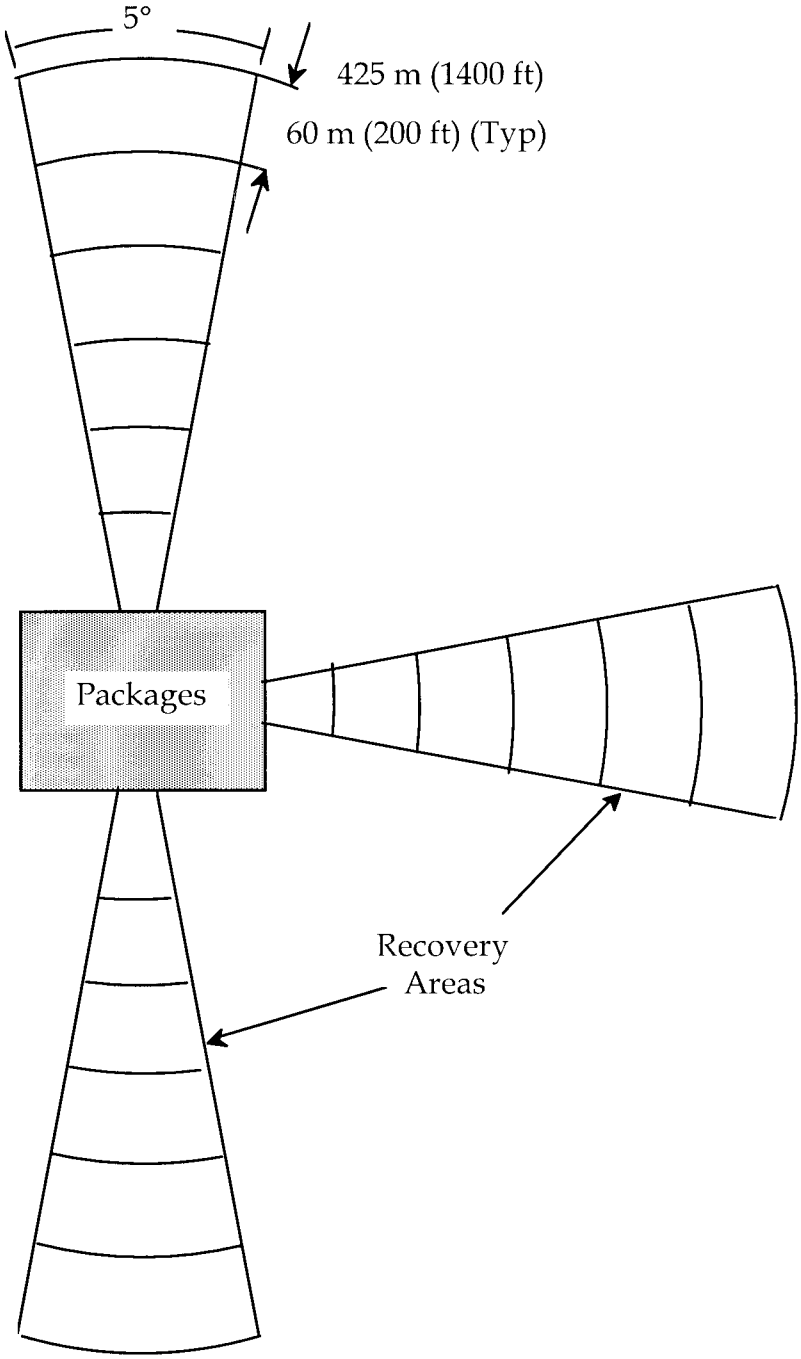

NOT TO SCALE

See Paragraph 6-3.*d*(2)*(a)*.

Figure 6-6. Fragment recovery areas for tests 6(b) and 6(c)—method 2

SUBSTANCE CLASSIFICATION TEST RESULTS

1. REQUESTING AGENCY	2. DATE (YYYYMMDD)
Indian Head Division, Naval Surface Warfare Center, Indian Head, MD	960229

3. SUBSTANCE IDENTITY	4. ASSIGNED CLASSIFICATIONS/DESIGNATIONS	5. UN NUMBER
PBXW-XXX	HD 1.1	Not Assigned

SECTION I - TEST SERIES 3

6. BUREAU OF EXPLOSIVES IMPACT MACHINE (Test 3(a)(i))	a. NUMBER OF TRIALS	b. HEIGHT (cm)	c. NUMBER FLAME/ EXPLOSION/ NOISE	d. NUMBER NO REACTION	e. NUMBER DECOMPOSITION/SMOKE (No noise)	f. PASS/FAIL
	25	39	5	10	5	Pass
	RDX/HMX	19	5	10	5	Pass

7. ABL FRICTION TEST (Test 3(b)(iii)) - PETN TIL FORCE (N): 80	a. NUMBER OF TRIALS	b. TIL FORCE (N)	c. SPARKS	d. FLAME	e. EXPLOSION	f. NOISE	g. PASS/FAIL
	20	121	0	0	0	0	Pass
			h. THRESHOLD OF INITIATION (TIL) FORCE (N) 121				

8. THERMAL STABILITY TEST AT 75° C (Test 3(c))	a. DETONATED (X)	b. IGNITED (X)	c. DECOMPOSITION (X)	d. FINAL TEMPERATURE (°C)	e. PASS/FAIL
	YES: [ ] NO: [X]	YES: [ ] NO: [X]	YES: [ ] NO: [X]	75	Pass

9. SMALL SCALE BURNING TEST (Test 3(d)(ii))	a. SAMPLE	b. EXPLOSION (X)	c. DETONATION (X)	d. BURN (X)	e. PASS/FAIL
[redacted]	1			X	Pass
	2			X	Pass
	3			X	Pass

SECTION II - TEST SERIES 4

10. STEEL TUBE DROP TEST FOR LIQUIDS	a. DENSITY (g/cm3 (lb/gallon))	b. TEMPERATURE (°C (°F))	c. MAXIMUM HEIGHT TESTED WITH NO DETONATION (mm (in))	d. PASS/FAIL

11. 12-METER DROP TEST FOR SOLID SUBSTANCES	a. SAMPLE	b. ATTITUDE	c. REACTION	d. PASS/FAIL

SECTION III - TEST SERIES 5

12. CAP SENSITIVITY TEST (Test 5(a))	a. NUMBER OF SAMPLES	b. COMPRESSION LENGTHS OF LEAD CYLINDER (mm (in))	c. HOLE IN WITNESS PLATE (X)	d. PASS/FAIL
	5	0	YES: [ ] NO: [X]	Pass

13. DDT TEST (Test 5(b)(iii))	a. SAMPLE	b. HOLE IN WITNESS PLATE (X) YES	NO	c. PASS/FAIL
[redacted]	1			
	2			
	3			

14. EXTERNAL FIRE TEST FOR HAZARD DIVISION 1.5 (Test 5(c))	a. NUMBER OF SAMPLES	b. NUMBER OF EXPLOSIONS	c. NUMBER OF BURNS	d. PASS/FAIL

15. PRINCESS INCENDIARY SPARK TEST (Test 5(d))	a. SAMPLE	b. IGNITION (X) YES	NO	c. PASS/FAIL
[redacted]	1			
	2			
	3			
	4			
	5			

SECTION IV - TEST SERIES 7

	a.	b.
16. EIDS CAP TEST (Test 7(a))	DETONATION (X) YES: [ ] NO: [ ]	PASS/FAIL
17. EIDS GAP TEST (Test 7(b))	DETONATION (X) YES: [ ] NO: [ ]	PASS/FAIL
18. SUSAN IMPACT TEST (Test 7(c)(i))	AVERAGE PRESSURE FOR TEN TESTS = kPa (psi)	PASS/FAIL

DD FORM 2738, JUL 96 (EG)

Designed using Perform Pro, WHS/DIOR, Jul 96

Figure 6-7. Sample substance data base recording form

SECTION IV - TEST SERIES 7 *(Continued)*

19. FRIABILITY TEST *(Test 7(c) and 7(d)(ii))*	a. AVERAGE DP/DT FOR THREE TESTS = MPa/ms (bars/ms)	b. MASS RECOVERED g (grains)	c. PASS/FAIL

20. EIDS BULLET IMPACT TEST *(Test 7(d)(i))*	a. SAMPLE NUMBER	b. EXPLODE *(X)* YES	b. EXPLODE *(X)* NO	c. DETONATE *(X)* YES	c. DETONATE *(X)* NO	d. PASS/FAIL
	1					
	2					
	3					
	4					
	5					
	6					

21. EIDS EXTERNAL FIRE TEST *(Test 7(e))*	a. MAXIMUM FRAGMENT MASS g (grains)	b. MAXIMUM FRAGMENT DISTANCE m (ft)	c. PASS/FAIL

22. EIDS SLOW COOKOFF TEST *(Test 7(f))*	a. SAMPLE NUMBER	b. FRAGMENTS *(X)* YES	b. FRAGMENTS *(X)* NO	c. DETONATE/VIOLENT REACTION *(X)* YES	c. DETONATE/VIOLENT REACTION *(X)* NO	d. PASS/FAIL
	1					
	2					
	3					

SECTION V

23. FLASH POINT TEST FOR LIQUID EXPLOSIVES	a. FLASH POINT (°C (°F))	b. PASS/FAIL

SECTION VI - OPTIONAL TESTS

24. GAP TEST FOR SOLIDS AND LIQUIDS *(Test 1(a)(iii))*	a. SAMPLE NUMBER	b. PROPAGATION *(X)* YES	b. PROPAGATION *(X)* NO	c. PASS/FAIL
	1		X	Pass
	2		X	Pass
	3		X	Pass

25. INTERNAL IGNITION TEST *(Test 1(b)(ii))*	a. SAMPLE NUMBER	b. FRAGMENTS *(X)* YES	b. FRAGMENTS *(X)* NO	c. PASS/FAIL
	1			
	2			
	3			

26. SLOW COOKOFF BOMB TEST *(Test 1(b)(iii))*	a. TIME *(Min/sec)*	b. TEMPERATURE (°C (°F))	c. SCB RUPTURED *(X)* YES NO	d. SCB FRAGMENTED *(X)* YES NO	e. WITNESS PLATE DEFORMED *(X)* YES NO	f. WITNESS PLATE PUNCTURED *(X)* YES NO	g. PASS/FAIL

27. GAP TEST FOR SOLIDS AND LIQUIDS *(Test 2(a)(iii))*	a. SAMPLE NUMBER	b. SAMPLE LENGTH *(cm (in))*	c. STABLE PROPAGATION *(X)* YES	c. STABLE PROPAGATION *(X)* NO	d. HOLE IN WITNESS PLATE *(X)* YES	d. HOLE IN WITNESS PLATE *(X)* NO	e. WITNESS PLATE THICKNESS *(mm (in))*	f. TUBE FRAGMENTED *(X)* YES	f. TUBE FRAGMENTED *(X)* NO	g. PASS/FAIL
	1									
	2									
	3									

28. INTERNAL IGNITION TEST *(Test 2(b)(ii))*	a. SAMPLE NUMBER	b. PIPE FRAGMENTED *(X)* YES	b. PIPE FRAGMENTED *(X)* NO	c. END CAPS FRAGMENTED *(X)* YES	c. END CAPS FRAGMENTED *(X)* NO	d. PASS/FAIL
	1					
	2					
	3					

29. SLOW COOKOFF BOMB (SCB) TEST *(Test 2(b)(iv))*	a. TIME *(Min/sec)*	b. TEMPERATURE (°C (°F))	c. SCB RUPTURED *(X)* YES NO	d. SCB FRAGMENTED *(X)* YES NO	e. WITNESS PLATE DEFORMED *(X)* YES NO	f. WITNESS PLATE PUNCTURED *(X)* YES NO	g. PASS/FAIL

SECTION VII

30. REMARKS *(Test Report Citations)*

1. NSWCIHD letter 8020 R11-JFL dtd 13 Jul 1989; Sub: Request for Assignment of Explosive Hazard Classification
2. NSWCIHD letter 8000 Ser 3120G/11 dtd 27 Jul 1989; Sub: Sensitivity Data

DD FORM 2738 (BACK), JUL 96

Figure 6-7A. Sample substance data base recording form (cont.)

AMMUNITION CLASSIFICATION TEST RESULTS

1. DATE (YYYYMMDD)	2. SECURITY CLASSIFICATION	3. TEST AGENCY	4. TESTING SERVICE	5. TESTING REFERENCE
960311		NSWCIHD	U.S. Navy	NAVSEAINST 8020.8B

6. ADDRESS OF SPONSORING SERVICE

a. STREET	b. CITY	c. STATE	d. ZIP CODE
23 Strauss Avenue	Indian Head	MD	20640-5555

7. NATIONAL STOCK NUMBER	8. CALIBER OR WEIGHT	9. ITEM NAME AND MODEL DESIGNATION
DODIC:	152mm (6.0in) diameter	TOW2A, BGM-71E-5B

10. TYPE OF PACKAGE AND PACKING MATERIALS
Single wall, extruded aluminum container (0.09 in. thick), standard dunnage

11. GROSS WEIGHT OF ITEM *(Round, Bomb, etc.) (KG (lb))*	12. NUMBER OF ITEMS IN EACH PACK	13. GROSS WEIGHT OF PACK *(KG (lb))*	14. WEIGHTS OF EXPLOSIVE(S)/ITEM *(KG (lb))*			
			a. 1.1	b. 1.3	c. 1.5	d. EIDS
30 (66)	9	270 (594)	28.6 (63)	55.2 (121.5)		

15. TOTAL QUANTITY	16. NET EXPLOSIVES WEIGHT FOR Q-D (NEWQD)	17. HIGH EXPLOSIVES WEIGHT (HEW) *(KG (lb))*	18. NET PROPELLANT WEIGHT (NPW) *(KG (lb))*
83.8 (184.5)	56.2 (123.75)	28.6 (63)	55.2 (121.5)

19. HAZARD DIVISION	20. COMPATIBILITY GROUP	21. DOT IDENTIFICATION NUMBER *(UN Serial No.)*
1.1	E	

22. AUTHORITY AND FORWARDING CORRESPONDENCE

23. THERMAL STABILITY TESTS FOR ARTICLES AND PACKAGES *(Test 4(a))*

a. DETONATED		b. IGNITED		c. FUMES/ODOR		d. FINAL TEMPERATURE *(°C (°F))*	e. PASS/FAIL
YES	NO	YES	NO	YES	NO		
	X		X		X	75 (168)	Pass

24. 12-METER DROP TEST FOR SOLID SUBSTANCES *(Test 4(b)(ii))*

a. ARTICLE	b. ATTITUDE	c. REACTION	d. PASS/FAIL
1	Horizontal	None	Pass
2	Vertical (nose down)	None	Pass
3	Vertical (tail down)	None	Pass

DD FORM 2739, JUL 96 (EG) Designed using Perform Pro, WHS/DIOR, Jul 96

Figure 6-8. Sample ammunition data base recording form

25. SINGLE PACKAGE TEST *(UN Test 6(a))*	
a. NUMBER OF TESTS	b. TEST RESULTS

26. STACK TEST *(UN Test 6(b))*		
a. NUMBER OF TESTS	b. NUMBER OF PACKAGES IN TEST	c. TEST RESULTS

27. EXTERNAL FIRE TEST *(Bonfire, UN Test 6(c))*	
a. NUMBER OF PACKAGES IN TEST	b. TEST RESULTS

28. 1.6 ARTICLE EXTERNAL FIRE TEST RESULTS *(UN Test 7(g))*		
a. NUMBER OF PACKAGES IN TEST	b. TEST RESULTS	c. PASS/FAIL

29. 1.6 ARTICLE SLOW COOKOFF TEST RESULTS *(UN Test 7(h))*		
a. NUMBER OF TESTS	b. TEST RESULTS	c. PASS/FAIL

30. 1.6 ARTICLE BULLET IMPACT TEST RESULTS *(UN Test 7(j))*		
a. NUMBER OF TESTS	b. TEST RESULTS	c. PASS/FAIL

31. 1.6 ARTICLE PROPAGATION TEST RESULTS *(UN Test 7(k))*			
a. NUMBER OF TESTS	b. NUMBER OF ARTICLES IN TEST	c. TEST RESULTS	d. PASS/FAIL

32. REMARKS *(Test Report Citations)*
NSWCDD/TR-92/258, Vulnerability and Hazard Assesment Test Results for the TOW-2A (BGM-71E) Missile System

DD FORM 2739 (BACK), JUL 96

Figure 6-8A. Sample ammunition data base recording form (cont.)

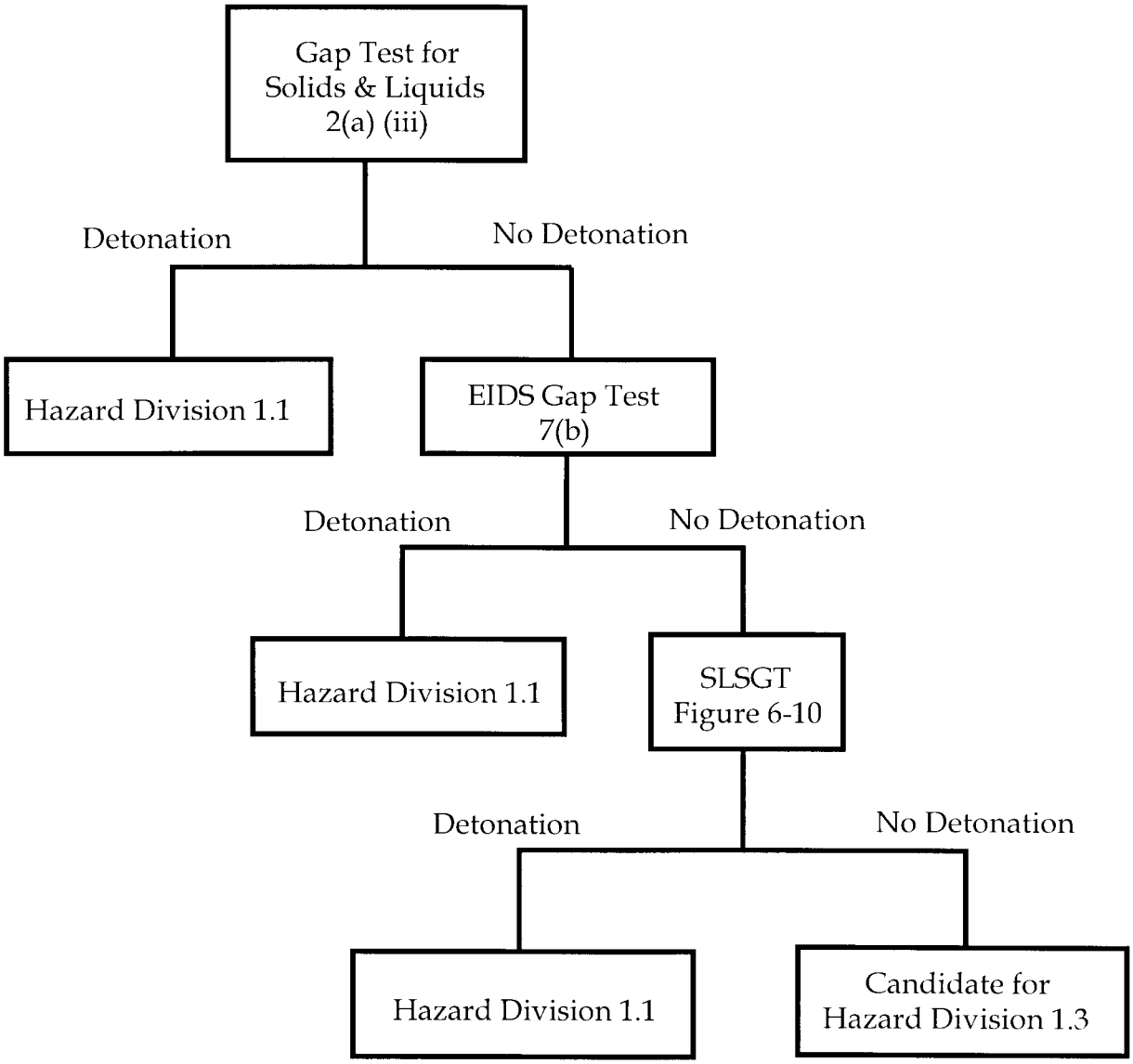

NOTES: Need only test up to card gap dimension that just exceeds the web thickness of the propellant in the rocket motor.

See Paragraph 6-6.*c*(1).

Figure 6-9. Solid rocket motor card gap test protocol

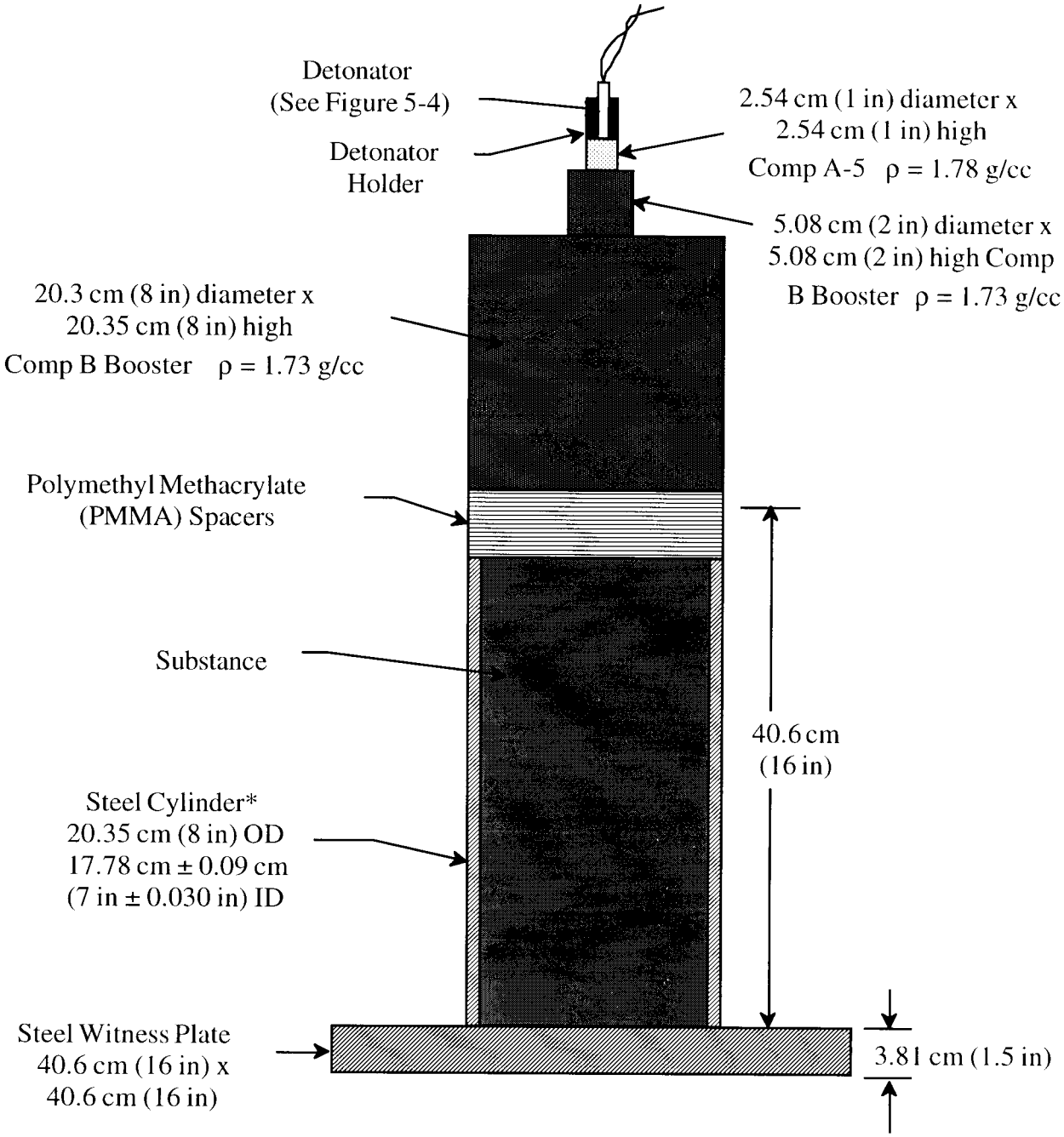

*May be machined from welded carbon steel tubing (1026) drawn over mandrel (DOM), spec: A513, size: 8 inch OD x 1/2 inch wall.

NOT TO SCALE

See Paragraph 6-6.*c*(1)(*c*).

Figure 6-10. Super large-scale gap test configuration

Chapter 7

Interim hazard classification

7–1. General

Interim hazard classifications are assigned for a variety of reasons. For example, during the course of programs for the acquisition of new explosives and ammunition items, explosive substances and devices must be transported from places where they are manufactured or assembled to testing facilities. Typically, these shipments are made at times during the development cycle when hardware configurations are subject to frequent significant changes. See paragraph 1–7 for shipment of laboratory samples.

a. Quantities of test items sufficient to support STANAG 4123 (App A, Ref 2) and DoD storage hazard classification tests are normally not available. Furthermore, extensive testing may not be economically justifiable to support one or a few shipments of such developmental configurations.

b. Consequently, it is frequently necessary to hazard classify explosive items on an interim basis with less information than is usually available regarding production items that are ready for release into the military inventory. This chapter includes guidance pertaining to responsibilities and procedures for the determination, documentation, and administrative control of interim hazard classifications.

7–2. Authority

a. The organization sponsoring development of, or first adopting for use, an explosive substance or assembly is responsible for providing the requisite data to the cognizant interim hazard classification authority for each new interim hazard classification or renewal required.

b. DoD or U.S. Department of Energy (DOE) Interim Hazard Classification of an ammunition and explosive must be approved (by signature) by one of the following persons:

(1) U.S. Army.

Chief, Explosives Safety Test Management
U.S. Army Technical Center for Explosives Safety
ATTN: SIOAC–EST
Savanna, IL 61074–9639

(2) U.S. Navy.

Director, Weapons and Explosives Safety Division
ATTN: N71
Naval Ordnance Center
23 Strauss Avenue
Indian Head, MD 20640–5555

(3) U.S. Air Force.

Air Force Safety Center
ATTN: SEWV
9700 Avenue G
Kirtland AFB, NM 87117–5670

(4) U.S. Department of Energy.

(a) Director, Occupational Safety and Health Division.

Director, Occupational Safety and Health Division
U.S. Department of Energy
Albuquerque Operations Office
Albuquerque, NM 97115–5400

(b) Program Manager, Hazardous Materials Transportation.

Program Manager, Hazardous Materials Transportation
U.S. Department of Energy
Oakland Operations Office
Oakland, CA 94612–5208

c. For DoD, the names of the persons holding the above listed positions or their alternate will be provided, through the DDESB and the Military Traffic Management Command (MTMC), to the Associate Administrator for Hazardous Materials Safety, Materials Transportation Bureau, RSPA/DOT, 400 7th Street, S.W., Washington, DC 20590. MTMC will furnish notification that DoD has placed the names on file at DOT.

d. For DOE, the names of the persons holding the above listed positions or their alternate will be provided through the Transportation Management Division (TMD) EM–261, to the Associate Administrator for Hazardous Material Safety, Materials Transportation Bureau, RSPA/DOT, 400 7th Street S.W., Washington, DC 20590, on a current basis. TMD will furnish notification that DOE has placed the names on file at DOT.

e. The chiefs of the U.S. Army, U.S. Navy and U.S. Air Force offices identified in Appendix A, Reference 3 may, with DDESB concurrence, authorize additional persons to grant (by signature) interim hazard classification approvals, subject to all the conditions and procedures of this chapter. At the time of publication these authorized persons are:

(1) U.S. Army.

(a) Chief, System Safety Office.

Chief, System Safety Office
U.S. Army Armament Research, Development, and Engineering Center
ATTN: AMSTA–AR–QAS
Picatinny Arsenal, NJ 07806–5000

(b) Chief, Safety Office.

Chief, Safety Office
U.S. Amy Edgewood Research, Development, and Engineering Center
ATTN: SCBRD–ODR–S
Aberdeen Proving Ground, MD 21010–5423

(c) Chief, Infrastructure Management Division.

Chief, Infrastructure Management Division
U.S. Army Research Laboratory Command
ATTN: AMSRL–CS–AL–RK
2800 Powder Mill Road
Adelphi, MD 20783–1145

(d) Chief, Safety Office.

Chief, Safety Office
U.S. Army Aviation and Missile Command
ATTN: AMSAM–SF
Redstone Arsenal, AL 35898–5130

(e) Chief, Safety Office.

Chief, Safety Office
U.S. Army Space and Strategic Defense Command
ATTN: CSSD–TC–WS
P.O. Box 1500
Huntsville, AL 35807–3801

(2) U.S Navy.
(a) Indian Head Division.

Indian Head Division
Naval Surface Warfare Center
ATTN: Code 041B
101 Strauss Ave.
Indian Head, MD 20640–5035

(b) Program Management Office.

Program Management Office
Strategic Systems Programs Detachment
P.O. Box 157
Magna, UT 84044–0157

(3) U.S. Air Force.
(a) HQ Ogden Air Logistics Center.

HQ Ogden Air Logistics Center
ATTN: LIWOS (Chief, Explosives Safety Team)
6043 Elm Lane (Bldg 1246
Hill AFB, UT 84056–5819

(b) Chief, Systems Safety.

Chief, Systems Safety
Air Force Development Test Center
ATTN: AFDTC/SES
Eglin AFB, FL 43542–6817

f. The names of persons to whom approval authority is delegated will be provided to the Associate Administrator for Hazardous Materials Regulation (DOT) and to the Department of Defense Explosives Safety Board (DDESB–KT), on a current basis. Acknowledgement from MTMC that DoD has placed the names on file with DOT is required.

g. The approval authority for DOE interim hazard classifications may not be delegated. Interim hazard classifications must be signed by one of the persons designated in paragraph 7–2*b* (4) or their alternates.

7–3. Limitations

a. Interim hazard classifications assigned to substances must be supported by results from Series 3 tests (para 5–4). In order to obtain an interim Hazard Division 1.3 classification then the following two tests also need to be conducted:

Note. Use format given by example in Figure 6–7 to report results.

(1) Test 2(a) (iii)—Use Gap Test for Solids and Liquids (para 5–3*a*) with a 14 cm (5.5 in) tube (and sample) length and a 9.5 mm (3/8 in) thick witness plate. The substance is interim hazard classified as Hazard Division 1.1 if a positive (+) response is obtained with a PMMA gap greater than or equal to 17.78 mm (0.7000 in -70 cards); otherwise, the substance may be interim hazard classified as Hazard Division 1.3. The U.S. Army Armament Research, Development and Engineering Center (ARDEC) Solid Propellant Shock Initiation Sensitivity Test (App A, Ref 16) is an acceptable alternate test for solid gun propellants. A solid gun propellant is interim classified as Hazard Division 1.1 if the reaction front propagates steadily with a PMMA gap greater than or equal to 7.6 mm (0.3 in) with the ARDEC test; if the reaction front velocity is decaying, then the solid gun propellant may be interim classified as Hazard Division 1.3.

(2) Test 5(a)—Cap Sensitivity Test (para 5–6*a*). The substance is interim hazard classified as Hazard Division 1.1 if a positive (+) response is obtained with a standard detonator; otherwise, the substance may be interim hazard classified as Hazard Division 1.3.

b. Interim hazard classification (which must include an appropriate compatibility group) may be issued for a period up to one year. Extension beyond one year will require a request from the originator, with justification, for renewal by the issuing organization. Interim hazard classifications need not be submitted to DOT for filing.

c. Any change in packaging or explosive components in an item will require reexamination of the item by the cognizant interim hazard classification authority listed in this chapter in order to ascertain the need for revision of the interim hazard classification.

d. Interim hazard classifications are not recognized for international shipments by commercial carrier. When international shipment by commercial carrier is necessary for ammunition and explosives without final DoD hazard classifications, a DOT Classification of Explosives with EX number assignment is required. (See para 3–1*b*). Interim hazard classifications and justifications for international shipment, required in conjunction with a request for a DOT Classification of Explosives with EX number assignment, may be issued for a period of up to two years.

e. Any incident involving loss of contents of the package must be reported to the Associate Administrator for Hazardous Materials Regulations, DOT; the Chairman, DDESB, or the DOE, Director, TMD; and the authority granting the interim as listed in 7–2*b*.

f. The interim hazard classification procedures apply only to DoD agencies and DoD contractors, or to DOE and DOE contractors, respectively.

7–4. Documentation

a. The following data, as applicable, will be provided as a part of the interim hazard classification request:

(1) Item nomenclature.
(2) Part numbers.
(a) Prime Contractor.
(b) Vendor.
(3) National stock number.*
(4) System the item is associated with.
(5) Next higher assembly item is used with.
(6) Size of unpackaged item.
(7) Weight of unpackaged item.
(8) Explosive compositions.
(9) Net explosive weight.
(10) Physical description of item.
(11) Functional description of item.
(12) Packaging data.
(13) Description of fuze safety features.

Note. *Unique contractor part numbers or product codes are allowed for interim hazard classifications.

b. A central file will be maintained by each organization to which interim hazard classification authority is delegated. The documentation of each hazard classification will be kept in a manner permitting rapid retrieval for as long as shipments or storage of the configuration may be necessary. A copy of the hazard classification will be expeditiously furnished, upon receipt of a proper request, to any organization required to store or transport an item that has been assigned an interim hazard classification.

c. A copy of each DoD interim hazard classification must be provided to the Chairman, DDESB. A copy of each DOE interim hazard classification must be provided to the Director, TMD and to the Chairman, DOE Explosive Safety Committee.

d. A copy of the applicable DoD or DOE interim hazard classification approval must be carried aboard each vehicle used to transport ammunition and explosives covered by this chapter.

e. For DOE, shipments by cargo aircraft may only be transported by an air carrier authorized by an exemption to carry explosives. The air carrier, exemption held by the carrier, and type of explosive to be carried, must be identified to and approved in writing by the Office of Hazardous Materials Exemptions and Approvals prior to

each shipment, or be authorized by provision of an authorized DOT exemption.

Chapter 8
Joint hazard classification system

8–1. Introduction

This chapter provides information and procedures concerning hazard classification data in the Joint Hazard Classification System (JHCS), hereinafter referred to as the JHCS.

8–2. Background

a. The JHCS is a data base containing hazard classification and safety data for explosive items, ammunition and ammunition related items (i.e., items containing some Class 1 material) of the DODCs. The information contained in the JHCS is necessary for safe storage and transportation. The JHCS was established to promote consistency among DoD hazard classification actions, to eliminate duplication and conflict among component hazard classification assignments, and to provide a single source document of authoritative and controlled hazard classification data for the entire DoD.

b. The JHCS contains the following data elements for DoD explosive items, ammunition and ammunition-related items:

(1) DODC code — this code indicates which component is the proponent of an item's hazard classification.

(2) Tri-Service coordination code — this code indicates whether or not Tri-Service coordination has been completed.

(3) Item nomenclature.

(4) Department of Defense identification code (DODIC), Locally Assigned Ammunition Reporting Code (LARC), or Navy Ammunition Logistic Code (NALC).

(5) National Stock Number (NSN).

(6) DOD hazard division transportation and storage Compatibility Group (CG).

(7) United Nations (UN) Serial Number.

(8) Department of Transportation (DOT) hazard class (pre-1991).

(9) DOT marking (with supplementary expansion) (pre–1991).

(10) DOT label (pre–1991).

(11) Hazard symbol.

(12) High explosive weight (HEW) (in units of pounds and kilograms).

(13) Net propellant weight (NPW) (in units of pounds and kilograms).

(14) Net explosive weight (NEW) — the total of all Class 1 material used for transportation purposes (in units of pounds and kilograms).

(15) Net explosive weight for Q–D (NEWQD) — that combination of explosive weight and propellant weight used to determine the explosive weight used for quantity-distance purposes (in units of pounds and kilograms).

(16) Part number and/or drawing number.

c. The above data will be sorted in the following sequences for output purposes:

(1) NSN.

(2) Federal Stock Class (FSC)/ DODIC/National Item Identification Number (NIIN).

(3) Part number (drawing number)/NSN.

(4) Alphabetical listing by Item Nomenclature.

8–3. Responsibilities and procedures

a. A JHCS control record will be generated for any addition, deletion or change to the JHCS. A sample of the data base record is provided in Table 8–1. Each DODC is responsible for completing the record with the appropriate data elements for the desired additions, deletions and changes to the JHCS.

b. All completed control records for revising the JHCS will be forwarded to the Director, U.S. Army Technical Center for Explosives Safety, ATTN: SIOAC–EST, Savanna, IL 61074–9639. A review of the information will be performed to determine acceptability of the entry and for compliance with the procedures in this publication.

c. The Director, U.S. Army Technical Center for Explosives Safety, will be responsible for distribution of the JHCS printouts to DODCs, world-wide distribution of the quarterly printed JHCS microfiche, inputting data into the JHCS, and maintaining the JHCS to include the on-line service.

Table 8–1
Joint Hazard Classification System control record

Position	Acronym	Data Entry Field	Spaces
0	TC (TRANS CD)	(A)	1
1	DOD–COMP	(A)	1
2	TRI–SVC–COORD	(Y)	1
3	NSN	(1305013480192)	13
4	ITEM–NOMEN	(CARTRIDGE, 25MM, APFSDS–T, M919)	48
5	DODIC	(A986)	4
6	IBD	(04)	2
7	DOD–HCD	(1.2)	3
8	CG	(C)	1
9	HAZ–SYM–CD	( )	2
10	UN–SER–NO	(0328)	4
11	EX–REG	(9502042)	11
12	HIGH–EXPL–WT	(0.0046)	7
13	NET –PROPEL–WT	(0.2095)	7
14	NET–EXPL–WT	(0.2141)	7
15	NET–EXPLO–WGT–QD	(0.2141)	7
16	PART–OR–DWG–1	(9391187)	16
17	PART–OR–DWG–2	(12938117)	16
18	PART–OR–DWG–3	(12929427)	16
19	PSN	(CARTRIDGES FOR WEAPONS, INERT PROJECTILE)	150
20	TECH– NAME	( )	50

d. The JHCS will be distributed on microfiche on a quarterly basis. The fiche is available for unlimited distribution. Anyone desiring a copy of the microfiche and/or placement on automatic distribution for the fiche should send a request to: Director, U.S. Army Technical Center for Explosives Safety, ATTN: SIOAC–ESM, Savanna, IL 61074–9639 (DSN 585–8710 or Commercial (815) 273–8710).

e. The JHCS is available through an on-line format. Contact the same address and telephone numbers in the previous paragraph to request access (password and login/ID) and procedures. Contact may be also made by electronic mail at jhcs@dac-emh1.army.mil. The JHCS may also be accessed on the Hazard Classification Home Page at http://192.108.244.100/es/est/hc.html.

8–4. Department of Transportation (DOT) changes

a. In 1991 the DOT adopted into federal law a different system for hazard classification of dangerous goods. The new system is essentially that which is used by United Nations for the transportation of dangerous goods. The total phase-in period for the new system is ten years. The 49 CFR (App A, Ref 3) has more detailed information regarding the different phase-in periods for specific situations and should be consulted as the authoritative source. The JHCS will continue to have the old DOT information for the entire phase-in period of ten years.

b. For new items added to the JHCS after April 1991, there will be no DOT (old system) information added.

c. For those items added after April 1991, the DOT hazard class for Class 1 items will be the DoD Hazard Division Compatibility Group. Any parenthetical values appearing in the DoD hazard class will not be included in the DOT hazard class. For those items where the DoD Hazard Division Compatibility Group is other than Class 1

(i.e., Class 2–9), the DOT class will consist only of the DoD Hazard Division. No Compatibility Group for Class 2–9 will be included in the DOT hazard class; whereas, it will be for DoD.

d. For those items entered in the JHCS after April 1991, the DOT label for Class 1 items will be the word "Explosive" followed by the DOT hazard class (i.e., 1.2C). For Class 2–9 consult 49 CFR (App A, Ref 3).

e. For those items entered after April 1991, the DOT container marking for Class 1 items will consist of the Proper Shipping Name (as defined by the UN Serial Number), the UN Serial Number, and the NSN or part number. The NSN or part number may be used only if it is directly traceable to a DOT assigned registration number (i.e., "EX" number). All of these data elements are in the JHCS.

8–5. Completion of control record for JHCS revision

a. Each element allows sufficient space for hazard classification data. There are a total of 20 available data entries for each item entered into the JHCS.

b. Each data element and the available codes that are incorporated on the record are provided in Table 8–2.

Table 8–2
JHCS control record data elements

FIELD POS	DATA ITEM IDENTIFICATION	SIZE/CLASS	EXPLANATION
0	Transaction Code (TC), Definition: A code that identifies the effect that input will have on the automated file.	1A	Enter a code which describes the transaction being reported as follows: A—Add. Establish a record for an item. C—Change. Change selective data elements already established for an NSN. D—Delete. Delete an established record for an NSN. Each control record for deletion must contain data in field positions 1, 2, and 3 and a D in position.
1	DOD Component(DOD—COMP). Definition: A code that designates which Service is the proponent of the item's hazard classification.	1A	Enter one of the following: A—Army F—Air Force N—Navy I—Undetermined
2	Tri-Service Coordination TRI–SVC–COORD) Definition: A code that indicates whether Tri-Service agreement has been reached on the hazard classification.	1A	Enter one of the following: Y—Yes N—No X—Yes, by Panel in Jul 89 T—Not new O or P—Yes, to establish the same NSN a maximum of three times to record variable data related to the number of boxes and/or different manufacturers in shipments of certain material.
3	National Stock Number (NSN) Definition: A number composed of a four-digit Federal Supply Classification and a nine-digit National Item Identification Number (NIIN)	16AN	Enter 13 numerals as defined: Example: 1337–00–269–5030
4	Item Nomenclature (ITEM–NOMEN) Definition: A description consisting of a noun phrase or modifier and identifying the make, model, size, etc., of the item.	48AN	Enter description of the item up to 48 characters long. Example: IGNITER ROCKET MOTOR Leave unused, trailing positions of the field blank.
5	Department of Defense Identification Code ((DODIC) Definition: A code assigned to a generic description of an item of supply in Federal Stock Group 13 (Ammunition and Explosives) and Federal Stock Group 14 (Guided Missiles). A locally Assigned Ammunition Reporting Code (LARC) for the Air Force or a Navy Ammunition Logistic Code (NALC) may be used.	4AN	Enter a four digit alphanumeric identification, as assigned, otherwise, leave blank. Examples: V835; VY80; VY80.
6	Inhabited Building Distance (IBD) Definition: The minimum separating distance hundreds of feet) for specified levels of protection of inhabited buildings and personnel in the open from hazardous fragments or firebrands produced by ammunition and explosives items as determined by tests in accordance with the Technical Bulletin. It will appear within parentheses.	2N	Enter two numerals to report the inhabited building distance for the item in hundreds of feet; otherwise, leave blank. Sample entries: 04=400 feet 12=1,200 feet
7	DoD Hazard Division (DOD–HCD) Definition: The hazard division designator denotes both the hazard class and division for the material. The hazard class is a designator to denote that the material is explosive, compressed gas, flammable gas, flammable liquid or solid, oxidizing substances, poisonous (toxic), radioactive, corrosive, or miscellaneous hazardous material. The (hazard) division is a designator assigned to denote the character and predominance of the associated hazards and the potential for causing personnel casualties or property damage.	3AN	Enter a numeral for the DoD hazard class, a period (.), and a numeral for the DoD (hazard) division for the item. Available classes: HD Explosive: 1.1, 1.2, 1.3, 1.4, 1.5, 1.6 Compressed Gas: 2.1, 2.2, 2.3 Flammable Liquid: 3 Flammable Solids: 4.1, 4.2, 4.3 Oxidizing Substance: 5.1, 5.2 Poisonous (toxic): 6.1, 6.2 Radioactive material: 7 Corrosive: 8 Miscellaneous Hazards: 9 Non-Regulated N.R Sample entry: 1.2 *Note.* All HD 1.2 items must have an IBD (field position 6) filled in or the control record will be rejected.

Table 8–2
JHCS control record data elements—Continued

FIELD POS	DATA ITEM IDENTIFICATION	SIZE/CLASS	EXPLANATION
8	Compatibility Group (CG) Definition: In view of transportation and storage principles, the grouping of ammunition and explosives is usually obvious from the description of the item. See Chapter 4 of the publication. All classes will include CG.	1AN	Enter one of the following: A, B, C, D, E, F, G, H, J, K, L, N, S
9	Hazard Symbol Code (HAZ–SYM–CD) Definition: A pseudo-code used to identify specific hazard symbols required for storage.	2A	Enter one or a maximum of two letters. See Table 8–5 for hazard symbol codes.
10	United Nations Serial Number (UN–SER–NO) Definition: The identification of a hazardous material assigned by the United Nation's regulatory authorities.	4N	Enter four numerals assigned for domestic and international identification of the item. The HD (field position 7) and SCG (field position 8) must be in agreement with the UN number selected. If not, the data record will be rejected. For Non-regulated items, use all zeros, i.e., 0000. Example: 0314
11	Department of Transportation (DOT) EX Registration Number (DOT–EX–REG–NO) and suffix(es)	11AN	Enter the seven digit and possibly letter(s) that are received from DOT when the DoD places an item on file with the DOT as required per 49 CFR 173.56. Example: 8709021 or 9112123AB
12	High Explosive Weight (HIGH–EXPL–WT) Definition: The total weight of explosives (Hazard Division 1.1 material) in the item.	7AN	Enter six or less numerals and a floating decimal point to express the total weight in pounds as defined. The computer will right justify this field, leaving preceding, unused positions blank. Enter actual Class 1 material weight for Non-Class 1 and non-regulated items. Examples: WT — ENTRY 1/8 lb — (0.125) 145–3/4 l — (145.75) 3000 lb — (3000)
13	Net Propellant Weight (NET–PROPEL–WT) Definition: The total weight of propellant (Hazard Division 1.3 material) in the item.	7AN	Enter six or less numerals and a floating decimal point to express the weight in pounds as defined. The computer will right justify this field. Refer to examples above. Enter actual Class 1 material weight for Non-Class 1 and non-regulated items.
14	Net Explosive Weight (NET–EXPL–WT) Definition: The total weight of all Class 1 material in an item. It has to equal the sum of the High Explosive Weight and the Net Propellant Weight.	7AN	The computer will do summation. Non-Class 1 items will use the sum of the High Explosive Weight and the Net Propellant Weight. Non-regulated items will use 0.0.
15	Net Explosive Weight for Q–D (NET–EXPLO–WGT–QD) Definition: The net explosive weight, the net propellant weight, or a combination of the two, for a single item according to paragraph 4–9d of the publication.	7AN	Enter six or less numerals and floating decimal point to express the weight (in pounds), that will be used for quantity distance computation. *Note.* The Net Explosive Weight will be used for transportation purposes; this value is for storage. Non-Class 1 and non-regulated items will use 0.0.
16	Part Number or Drawing Number (PART–OR–DWG–1)	16AN	Enter the manufacturer's part number or the drawing number of the main assembly for the item. Left justify this field leaving left unused positions blank and include pertinent dash or dashes. Example: (HC–01A90081–005) (7400592) (75–1–71&) (812503–133)
17	Part Number or Drawing Number (PART–OR–DWG–2)	16AN	Use this field only if field position 19 has been used. Enter the manufacturer's part number or the drawing number of the main packaging drawing for the item. Left justify this field leaving left unused positions blank and include pertinent dash or dashes. See examples in position #16. If not needed, leave blank.

Table 8–2
JHCS control record data elements—Continued

FIELD POS	DATA ITEM IDENTIFICATION	SIZE/CLASS	EXPLANATION
18	Part Number or Drawing Number (PART–OR–DWG–3)	16AN	Use if needed. Instructions same as for field positions 16 and 17.
19	Proper Shipping Name (PSN) Definition: A description specified by DOT in 49 CFR 172.101 to identify hazardous material.	150AN	Enter Proper Shipping Name from 49 CFR 172.101 up to 150 characters long. Leave unused, trailing positions blank. Example: CARTRIDGES FOR WEAPONS.
20	Technical Name (TECH–NAME) Definition: Recognized chemical name required by 49 CFR 172 for "N.O.S."	50AN	Enter technical name(s) up to 50 characters long. Leave unused, trailing positions blank.
Note: Obsolete entries (below denoted by asterisks (*)) will be available in the JHCS for those items entered prior to April 1991. Those items entered in the JHC after April 1991 will not have this information filled in. See paragraph 8–4 for further information.			
I*	Department of Transportation Label (DOT–LABEL–1) Definition: The coded definition of the label that must be applied to the shipping container(s) for a hazardous material.	1AN	Data elements I, II and III are obsolete and no longer required for changes made after April 1991. See paragraph 8–4 for these items. For those items entered into the JHCS prior to April 1991, the following would apply. Enter one number or letter to identify the first label to be affixed to the container(s) for the item. (See Table 8–3 for DOT label codes.) Example: I (for DOT label of Explosive A item).
II*	Department of Transportation Label (DOT–LABEL–2) Definition: The coded identification of the second label that must be applied to the shipping container(s) for a hazardous material.	1AN	Enter one number or letter to identify the second label to be affixed to the container(s). If not needed then leave blank. See Table 8–3 for DOT label codes. (See para 8–4 for additional DOT information.)
III*	Department of Transportation Label Code (DOT–LABEL–3) Definition: The coded identification of the third label that must be applied to the shipping container(s) for a hazardous material.	1A	If an entry has been made in field position II above, enter herein the third label to be affixed to container(s).If not needed then leave blank. See Table 8–3 for DOT label codes. (See para 8–4 for additional DOT information.)
IV*	Department of Transportation Class Code (DOT–CLASS) Definition: A code that identifies the class of hazardous materials assigned to the item for transportation purposes.	1AN	Enter number or letter. See Table 8–5 for DOT class code. This data element is also obsolete. After April 1991, for Class 1 items, the DOT class is the HD (field position 7) and CG (field position 8). For Class 2–9 items, the DOT class is the HD in field position 7. See para 8–4 for additional DOT information. The entries made before April 1991 will have DOT class code data elements.
V*	Department of Transportation Exemption (DOT–EXEMPT) Definition: The identification of the part of the 49 CFR under which the item is exempt from DOT regulations. Definition: The numeric identification of a combination of classes of explosives.	1N	Enter one of the following numerals to express the exemption: 1—Exempt under part 173.55 (pre-1991 49 CFR) 2—Exempt under part 173.260 (pre-1991 49 CFR) Enter the numeral 3, as required to identify the combination of classes of explosives portrayed in Table 8–6. This data element is also obsolete, but will be available for entries made prior to April 1991.
VI*	Department of Transportation Marking (DOT–MK) Definition: Required marking that must be used on the outside of shipping containers in accordance with 49 CFR 173.	2A	Enter two letters to designate the proper DOT marking to be placed on the shipping container(s) for the item. See Table 8–6 for DOT marking. (This data element is also obsolete. After April 1991, the container marking will consist of the proper shipping name, UN serial number, and NSN. The proper shipping name is defined by the UN serial number assigned in position 10, above. (See para 8–4 for more DOT information.)
VII*	Department of Transportation Marking Expansion (DOT–MK–EX) Definition: Additional information required to be placed on the outside of shipping containers to further identify items for transportation purposes.	2N	Relative to the marking entry infield position VI above, enter the following additional coding: 01—(Proof) 02—(White Phosphorous) 03—(Black Powder) 04—(W/Ethylene Oxide) 05—(W/Titanium Tetrachloride) 06—(GB) 07—(VX) 08—(Sodium Chlorate w/Percussion Caps) 09—(Dibenz (1, 4) Oxazepine) (CR) 10—(W/explosive cartridge)

Table 8–3
Department of Transportation (DOT) label codes

CODE	DOT LABEL
I	Explosive A
J	Explosive B
F	Explosive C
W	Corrosive
R	Flammable Liquid
X	Flammable Solid
T	Irritant
G	Non-flammable Gas
M	Magnetized Material
Y	Oxidizer
1	Poison Gas
2	Poison
3	No label required
4	Flammable liquid, Non-flammable Gas, and Poison Gas
5	Explosive and Poison Gas
6	Flammable Solid and Poison
7	Flammable Liquid and Poison
8	Oxidizer and Poison
9	Explosive A or Explosive C

Table 8–4
Hazard symbol codes

CODE	HAZARD SYMBOL	MEANING
F	G (Army only)	G-type Nerve Agent
G	VX (Army only)	VX Nerve Agent
H	H (Army only)	Mustard Agent
I	L (Army only)	Lewisite
J	BZ (Army only)	Agent BZ
A	Full protective clothing	(Red) Set 1
B	Full protective clothing	(Yellow) Set 2
C	Full protective clothing	(White) Set 3
D	Wear breathing apparatus	
E	Apply no water	

Notes:

For Air Force Users: Items coded with an "E" show that the "Apply no Water" symbol may or may not require posting of the symbol depending on quantity being stored and/or amount of water available in event of a fire. Air Force personnel refer to Air Force Regulation 92–1 and consult with local fire chief to determine the applicability of using the symbol for each location.

Table 8–5
Department of Transportation (DOT) class codes

CODE	DOT LABEL
I	Class A Explosive
J	Class B Explosive
F	Class C Explosive
W	Corrosive Material
R	Flammable Liquid
X	Flammable Solid
T	Irritating Solid
G	Non-flammable Gas
Y	Oxidizer
S	Poison A
P	Poison B
3	Class A Explosive or C Explosive

Table 8–6
Department of Transportation (DOT) shipping description codes

CODE	DOT MARKING	DOT PROPER SHIPPING NAME
AB	AMMUNITION FOR CANNON W/EXPLOSIVE PROJECTILES	Ammunition for cannon with explosive projectile
AC	AMMUNITION FOR CANNON W/ GAS PROJECTILES	Ammunition for cannon with gas projectile
AD	AMMUNITION FOR CANNON W/ILLUMINATING PROJECTILES	Ammunition for cannon with illuminating projectile
AF	AMMUNITION FOR CANNON W/INERT LOADED PROJECTILES	Ammunition for cannon with inert projectile
AG	AMMUNITION FOR CANNON W/SMOKE PROJECTILES, CLASS A EXPLOSIVES	Ammunition for cannon with smoke projectile
AH	AMMUNITION FOR CANNON W/SOLID PROJECTILES	Ammunition for cannon with solid projectile
AI	AMMUNITION FOR CANNON W/O PROJECTILES	Ammunition for cannon without projectile
AK	AMMUNITION FOR SMALL ARMS W/EXPLOSIVE PROJECTILES	Ammunition for small arms with explosive projectile
AL	BLACK POWDER	Black Powder
AN	(QTY) BLASTING CAPS—HANDLE CAREFULLY	Blasting caps (show actual number)
AP	BOOSTERS (EXPLOSIVE)—HANDLE CAREFULLY	Booster, explosive
AQ	BURSTERS (EXPLOSIVE)—HANDLE CAREFULLY	Burster, explosive
AR	CANNON PRIMERS—HANDLE CAREFULLY	Cannon primers
AU	COMBINATION FUZES—HANDLE CAREFULLY	Combination fuze
AV	COMBINATION PRIMERS—HANDLE CAREFULLY	Combination primers
AZ	DETONATING FUZES, CLASS A EXPLOSIVES—HANDLE CAREFULLY—DO NOT STORE OR LOAD WITH ANY HIGH EXPLOSIVES	Detonating fuze, Class A explosive
BB	DETONATING FUZES, CLASS C EXPLOSIVE—HANDLE CAREFULLY	Detonating fuze, Class C Explosive
BE	ELECTRIC SQUIBS	Electric squib
BF	EXPLOSIVE BOMBS	Explosive bomb
BG	EXPLOSIVE CABLE CUTTERS—HANDLE CAREFULLY—KEEP FIRE AWAY	Explosive cable cutter
BH	EXPLOSIVE MINES	Explosive mine
BI	EXPLOSIVE PROJECTILES	Explosive projectile
BJ	EXPLOSIVE RELEASE DEVICES—HANDLE CAREFULLY— KEEP FIRE AWAY	Explosive release device
BN	FLAMMABLE LIQUID, N.O.S.	Flammable liquid, n.o.s.
BO	FLAMMABLE SOLID, N.O.S.	Flammable solid, n.o.s.
BQ	FUSE LIGHTERS	Fuse lighter
BS	HAND GRENADES	Grenade, hand, explosive
BT	HIGH EXPLOSIVES—DANGEROUS	High explosive
BW	IGNITERS	Igniters
BX	IGNITERS, JET THRUST, CLASS A EXPLOSIVES	Igniter, jet-thrust (jato)
BY	IGNITERS, JET THRUST, CLASS B EXPLOSIVES	Igniter, jet-thrust (jato)
CB	JET THRUST UNIT, CLASS A EXPLOSIVES	Jet thrust unit (jato)
CE	PERCUSSION CAPS —HANDLE CAREFULLY	Percussion cap
CF	PERCUSSION FUZES—HANDLE CAREFULLY	Percussion fuze

Table 8–6
Department of Transportation (DOT) shipping description codes—Continued

CODE	DOT MARKING	DOT PROPER SHIPPING NAME
CJ	PROPELLANT EXPLOSIVES, CLASS A	Propellant explosive
CK	PROPELLANT EXPLOSIVES (SOLID) CLASS B	Propellant explosive, solid
CN	FUSEES—HANDLE CAREFULLY—KEEP FIRE AWAY	Fusees
CP	RIFLE GRENADES	Grenade, rifle explosive
CQ	ROCKET AMMUNITION W/EMPTY PROJECTILES	Rocket ammunition with empty projectile
CR	ROCKET AMMUNITION W/EXPLOSIVE PROJECTILES	Rocket ammunition with explosive projectile
CS	ROCKET AMMUNITION W/ILLUMINATING PROJECTILES	Rocket ammunition with illuminating projectile
CT	ROCKET AMMUNITION W/GAS PROJECTILES	Rocket ammunition with gas projectile
CU	ROCKET AMMUNITION W/INCENDIARY PROJECTILES	Rocket ammunition with incendiary projectile
CV	ROCKET AMMUNITION W/INERT LOADED PROJECTILES	Rocket ammunition with inert loaded projectile
CW	ROCKET AMMUNITION W/SMOKE PROJECTILES	Rocket ammunition with smoke projectile
CX	ROCKET AMMUNITION WITH SOLID PROJECTILE	Rocket ammunition with solid projectile
CZ	SAFETY FUSE	Safety fuse or fuse, safety
DA	SAFETY SQUIBS	Safety squib
DB	SIGNAL FLARES—HANDLE CAREFULLY—KEEP FIRE AWAY	Signal flare
DC	SMALL ARMS AMMUNITION	Small arms ammunition
DD	SMALL ARMS AMMUNITION IRRITATING (TEAR GAS) CARTRIDGES	Small arms ammunition, irritating cartridge
DE	SMALL ARMS PRIMERS—HANDLE CAREFULLY	Small arms primer
DF	SMOKE POTS—HANDLE CAREFULLY—KEEP FIRE AWAY	Smoke pot
DG	SMOKE SIGNALS—HANDLE CAREFULLY—KEEP FIRE AWAY	Smoke signal
DH	SPECIAL FIREWORKS—HANDLECAREFULLY—KEEP FIRE AWAY	Fireworks, special
DK	TIME FUSES—HANDLE CAREFULLY	Fuse, time
DR	COMMON FIREWORKS—HANDLECAREFULLY—KEEP FIRE AWAY	Fireworks, common
DS	CHLOROACETOPHENONE, SOLID (CN)	Chloroacetophenone, solid (CN)
DU	CHLOROACETOPHENONE, LIQUID (CN)	Chloroacetophenone, liquid
DX	GRENADE, TEAR GAS	Grenade, tear gas
DZ	PHOSPHORUS, WHITE, DRY	Phosphorus, white, dry
EA	EXPLOSIVE POWER DEVICES, CLASS C—HANDLE CAREFULLY—KEEP FIRE AWAY	Explosive power device, Class C
ED	STARTER CARTRIDGES, JET ENGINE, CLASS C EXPLOSIVES—HANDLE CAREFULLY—KEEP FIRE AWAY	Starter cartridge
EK	ROCKET MOTORS, CLASS A EXPLOSIVES	Rocket motor
EM	ROCKET MOTORS, CLASS B EXPLOSIVES	Rocket motor
EN	AMMUNITION FOR SMALL ARMS W/INCENDIARY PROJECTILES	Ammunition for small arms with incendiary projectile
EQ	HAND SIGNAL DEVICES—HANDLE CAREFULLY—KEEP FIRE AWAY	Hand signal device
ET	EXPLOSIVE TORPEDO	Explosive torpedo

Table 8–6
Department of Transportation (DOT) shipping description codes—Continued

CODE	DOT MARKING	DOT PROPER SHIPPING NAME
EW	CARTRIDGES, PRACTICE AMMUNITION	Cartridge, practice ammunition
EX	TRACERS—HANDLE CAREFULLY	Tracer
FA	DETONATORS—HANDLE CAREFULLY	Detonators, Class A Explosives
FB	DETONATORS—HANDLE CAREFULLY	Detonators, Class C Explosives
FC	FLEXIBLE LINEAR SHAPED CHARGE, METAL CLAD—HANDLE CAREFULLY	Flexible linear shaped charge, metal clad
FD	ELECTROLYTE (ACID) BATTERY FLUID	Electrolyte battery fluid
FE	SMOKE CANDLES—HANDLE CAREFULLY—KEEP FIRE AWAY	Smoke candles
FF	SUPPLEMENTARY CHARGE (EXPLOSIVE)—HANDLE CAREFULLY	Supplementary charge (explosive)
XA	OXIDIZING MATERIAL, N.O.S.	Oxidizing material, n.o.s.
XB	NITROGEN	Nitrogen
XC	HELIUM	Helium
XD	ACCUMULATOR, HYDRAULIC	Hydraulic accumulator or Accumulator, hydraulic
XE	ARGON	Argon
XF	ROCKET ENGINES (LIQUID), CLASS B EXPLOSIVES	Rocket engine, liquid
XG	ACTUATING CARTRIDGES, EXPLOSIVE,VALVE—HANDLE CAREFULLY	Actuating cartridge, explosive
XH	DETONATING PRIMERS—HANDLE CAREFULLY	Detonating primer
XJ	EMPTY CARTRIDGE CASES, PRIMED—HANDLE CAREFULLY	Empty cartridge case, primed
XL	JET THRUST UNITS, CLASS B EXPLOSIVES	Jet thrust unit
XM	IGNITERS, ROCKET MOTORS, CLASS B EXPLOSIVES	Igniter, rocket motor
XN	SMOKE GRENADES—HANDLE CAREFULLY—KEEP FIRE AWAY	Smoke grenade
XS	POISONOUS GAS, N.O.S.	Poisonous gas, n.o.s.
XT	IGNITER FUSE—METAL CLAD	Igniter fuse, metal clad
XU	EXPLSOIVE POWER DEVICES, CLASS B—HANDLE CAREFULLY—KEEP FIRE AWAY	Explosive power device, Class B
XV	ACTUATING CARTRIDGES, EXPLOSIVE, FIRE EXTINGUISHER—HANDLE CAREFULLY	Actuating cartridge, explosive
XW	AMMUNITION FOR CANNON WITH EMPTY PROJECTILES	Ammunition for cannon with empty projectiles
XX	AMMUNITION, NON-EXPLOSIVE	Ammunition, non-explosive *Note*. "Ammunition, non-explosive" is technically not a DOT marking and containers need not be marked as such for transportation purposes. If containers are presently marked "Ammunition, non-explosive," they need not be remarked.
XY	CHEMICAL AMMUNITION, NON-EXPLOSIVE, CONTAINING A POISON MATERIAL	Chemical ammunition, non-explosive
XZ	MILD DETONATING FUSE, METAL CLAD—HANDLE CAREFULLY	Fuse, mild detonating, metal
YA	METHYLHYDRAZINE	Methlhydrazine
YB	NITROGEN TETROXIDE LIQUID	Nitrogen tetroxide, liquid
YD	ETHYLENE OXIDE	Ethylene oxide

Table 8–6
Department of Transportation (DOT) shipping description codes—Continued

CODE	DOT MARKING	DOT PROPER SHIPPING NAME
YE	EXPLOSIVE RIVETS	Explosive rivets
YF	ELECTROLYTE (ACID), BATTERY FLUID (NOT OVER 47% ACID)	Electrolyte, battery fluid
YG	IGNITERS, ROCKET MOTOR, CLASS A EXPLOSIVES	Igniter, rocket motor
YN	IRRITATING AGENT, N.O.S.	Irritating agent, n.o.s.
YI	CHEMICAL AMMUNITION, NON-EXPLOSIVE (CONTAINING ANIRRITATING MATERIAL)	Chemical ammunition, non-explosive (containing an irritating material)
YJ	BATTERY, ELECTRIC STORAGE, WET, FILLED WITH ALKALI	Battery, electric storage, wet, filled with alkali
YK	BATTERY, ELECTRIC STORAGE, WET, FILLED WITH ACID	Battery, electric storage, wet, filled with acid
YN	OXYGEN (WITH ELECTRIC SQUIB)	Oxygen
YP	TEAR GAS DEVICE	Tear gas device
YQ	DETONATING CORD—HANDLE CAREFULLY	Cord, detonating flexible
		Note. For Class A
YR	CORD, DETONATING FLEXIBLE—HANDLE CAREFULLY	Cord, detonating flexible
		Note. For Class C

APPENDIX A
REFERENCES related publications

1. Department of Defense Ammunition and Explosives Safety Standards, DoD 6055.9-STD, (latest revision). Defense Printing Service Detachment Office, 700 Robbins Avenue, Philadelphia, PA 19111. Phone: 215-697-2667; FAX 215-697-1462.

2. NATO Standardization Agreement (STANAG) 4123, Methods to Determine and Classify the Hazards of Military Ammunition and Explosives, (latest revision). Defense Printing Service Detachment Office, 700 Robbins Avenue, Philadelphia, PA 19111. Phone: 215-697-2667; FAX: 215-697-1462.

3. Code of Federal Regulations, Transportation, Title 49, Parts 100 to 177, (latest revision. Superintendent of Documents, Government Printing Office, Washington, DC 20402; Phone: 202-512-1800.

4. Recommendations on the Transport of Dangerous Goods, ST/SG/AC.10/1/latest revision. United Nations Publication, New York, New York 10017; Phone: (212) 963-8302.

5. Code of Federal Regulations, Protection of Environment, Title 40, Parts 260 to 299 (latest revision). Superintendent of Documents, Government Printing Office, Washington, DC 20402; Phone: 202-512-1800.

6. Recommendations on the Transport of Dangerous Goods, Tests and Criteria, ST/SG/AC.10/11/ latest revision. United Nations Publication, New York, New York 10017; Phone: 212-963-8302.

7. Ribovich, J., Watson, R. W. and Gibson, F. C., Instrumented Card Gap Test, AIAA Journal, Vol 6, No. 7, pp. 1260-1263, 1968. Linda Hall Library, 5109 Cherry Street, Kansas City, MO 64110-2498; Phone: 800-662-1545; FAX 816-926-8785.

8. ASME B16.11-1991, "Forged Fittings, Socket-Welding and Threaded," American Society of Mechanical Engineers, New York, NY (latest revision); Phone: 212-705-7800.

9. ASTM D56-87, "Standard Test Method for Flash Point by Tag Closed Tester," American Society for Testing and Materials, Philadelphia, PA (latest revision) Phone: 215-299-5400.

10. Giglio-Tos, L. and Linnebrink, T., "Air Blast Pressure Measurement Systems and Techniques," Minutes, 15th DDESB Seminar, pgs 1359-1402, September 1973 (AD 755-660). Defense Technical Information Center, Fort Belvoir, VA; Phone: 800-225-3842.

11. Kingery, C. N. and Bulmash, G., "Airblast Parameters from TNT Spherical Air Burst and Hemispherical Surface Burst," ARBRL-TR-02555, April 1984 (AD B082713). Defense Technical Information Center, Fort Belvoir, VA; Phone: 800-225-3842.

12. McCleskey, F., "Quantity-Distance Fragment Hazard Computer Program (FRAGHAZ)," NSWC

TR 87-59, February 1988. Naval Surface Warfare Center, Dahlgren Division, 17320 Dahlgren Road, Technical Library, Dahlgren, VA 22448-5000; Phone: 540-653-8351; FAX 540-653-7165.

13. Hay, J. C. and Watson, R. W., "Scaling Studies of Thermal Radiation Flux from Burning Propellants," Minutes, 25th DDESB Seminar, Volume IV, pp. 233-268, August 1992. (AD A26116) Defense Technical Information Center, Fort Belvoir, VA; Phone: 800-225-3842.

14. MIL-STD-1751, Military Standard, Safety and Performance Tests for the Qualification of Explosives (High Explosives, Propellants, and Pyrotechnics) (latest revision). Defense Printing Service Detachment Office, 700 Robbins Avenue, Philadelphia, PA 19111; Phone: 215-697-2667.

15. MIL-STD-2105, Military Standard, Hazard Assessment Tests for Non-Nuclear Munitions (latest revision). Defense Printing Service Detachment Office, 700 Robbins Avenue, Philadelphia, PA 19111; Phone: 215-697-2667.

16. Lu, Pai, AARDEC Solid Gun Propellant Shock Initiation Sensitivity Test," Minutes 26th DDESB Seminar, August 1994. CD-ROM, Defense Technical Information Center, Fort Belvoir, VA; Phone: 800-225-3842.

The United States has ratified this STANAG and it is approved for use. Actual promulgation by NATO is expected within one year. At that time, this document will be replaced by the promulgated version. Any U.S. comments or reservations are included in the following letter.

OFFICE OF THE UNDER SECRETARY OF DEFENSE

3000 DEFENSE PENTAGON
WASHINGTON DC 20301-3000

ACQUISITION AND TECHNOLOGY

June 10, 2002

MEMORANDUM FOR U.S. MISSION TO NATO, ARMAMENTS COOPERATION DIVISION (ARMY ARMAMENTS OFFICER), PSC 81, APO AE 09724

SUBJECT: Draft STANAG 4241 (EDITION 2) – "BULLET IMPACT, MUNITION TEST PROCEDURE "

Reference document, AC/310-D/195, 12 December 2001, SAB.

The U.S. Armed Forces ratifies the referenced agreement.

Ratification and implementation details are as follows:

	IMPLEMENTATION					
	Forecast Date			Actual Date		
RATIFICATION REFERENCE	NAVY	ARMY	AIR FORCE	NAVY	ARMY	AIR FORCE
Memo, OUSD(A&T) DATED AS ABOVE		June 10, 2002			June 10, 2002	

NATIONAL IMPLEMENTING DOCUMENT: MIL-STD-2105C

RESERVATIONS: None

COMMENTS: Paragraph 1.a. must be changed from "..calibre 0.50mm.." to "..calibre 0.50..". This is an obvious typographic error.

The point of contact is Mr. James E. Elliott, DSN 880-3047, commercial (973) 724-3047.

Anthony J. Melita
U.S. Key Delegate
AC/310 Main Group

CF:

Mr. Don Porada, Naval Ordnance Safety & Security Activity, Code N6, 23 Strauss Avenue, Bldg D-323, Indian Head, MD 20640-5555

Mr. James Lewis, Air Armament Center, AAC/SES, 1001 North 2nd Street, Suite 366, Eglin AFB, FL 32542-6838

Mr. James Elliott, U.S. Army Armament Research, Development & Engineering Center (ARDEC), AMSTA-AR-QAW-S, Picatinny Arsenal, NJ 07806-5000

Dr. Ruth Doherty, Naval Surface Warfare Center, Indian Head Division, Code 920T, 101 Strauss Ave, Indian Head, MD 20640-5035

Mr. Chris Janow, U.S. Army Armament Research, Development & Engineering Center (ARDEC), AMSTA-AR-CCZ, Picatinny Arsenal, NJ 07806-5000

Mr. Stephen N. Tanner, Naval Air Warfare Center, Code 476400D, China Lake, CA 93555-6001

Mr. Sami Hoxha, U.S. Army Armament Research, Development & Engineering Center (ARDEC), AMSTA-AR-QAW-S, Picatinny Arsenal, NJ 07806-5000

Mr. Homesh Lalbahadur, U.S. Army Armament Research, Development & Engineering Center (ARDEC), AMSTA-AR-CCF-D, Picatinny Arsenal, NJ 07806-5000

Mr. Herbert Egbert, U.S. Army Developmental Test Command, CSTE-DTC-TT-M, 314 Longs Corner Road, Aberdeen Proving Ground, MD 21005-5055

Mr. Brent Knoblett, DOD Explosives Safety Board, Room 856C, Hoffman Bldg I, 2461 Eisenhower Ave, Alexandria, VA 22331-0600

Dr. Jerry Ward, DOD Explosives Safety Board, Room 856C, Hoffman Bldg I, 2461 Eisenhower Ave, Alexandria, VA 22331-0600

Doctrine Division (C426), Marine Corps Combat Development Center, 3300 Russell Road, Suit 318A, Quantico, VA 22134-5021

HQUSAF/SAF/IAQ, 1500 Wilson Blvd, 9th Floor, Arlington, VA. 22209

Mr. R. Sladden, Armaments CO-Operation Section, Defence Support Division, NATO Headquarters, Avenue Leopold III, 1110 Brussels, Belgium

NATO/PfP UNCLASSIFIED

12 December 2001

DOCUMENT
AC/310-D/195

**GROUP ON SAFETY AND SUITABILITY FOR SERVICE (S3)
OF MUNITIONS AND EXPLOSIVES (AC/310)**

CNAD PARTNERSHIP GROUP (CPG)

**RATIFICATION DRAFT 1 - STANAG 4241 (EDITION 2)
BULLET IMPACT, MUNITION TEST PROCEDURES**

Memorandum by the Assistant Secretary General for Defence Support

(RATIFICATION REQUEST)

Reference: PfP(CPG-S/3-SG/3)DS/8 dated 30 November 2001

1. The Group on Safety and Suitability for Service of Munitions and Explosives, Sub-Group 3, approved, at reference, draft STANAG 4241 (Edition 2) for issue for ratification.

2. In line with the decision of the Group, the agreed text is herewith forwarded to delegations of NATO nations who are requested to obtain the national ratification by 15 June 2002. The delegations are asked to inform the Defence Support Division of their national Ratification references, together with a statement of the date by which national implementation is intended to be effective, using the ratification response form at Annex. The service or services within which the standard applies should be indicated.

3. Most national Ministries of Defence contain a standardization office or standardization liaison officer who can give advice on the procedure to be adopted to obtain a formal ratification reference. It is recommended that contact be made with that office.

4. As soon as sufficient ratifications have been received, this STANAG will be forwarded for promulgation.

(Signed) R. G. BELL

Enclosure: Stanag 4241 (Edition 2)
1 Annex

Action Officer: R. Sladden
Original: English
G:\Docum\AC310\AC310 STANAGs=AOPs\Stanags-AOPs Rati Rqt\195E4241 Ed2-ENG-NU.doc

ANNEX to
AC/310-D/195

STANAG 4241
(Edition 2)
(Ratification Draft 1)

NATIONAL REPLY ON THE RATIFICATION AND IMPLEMENTATION OF A STANAG

(National Reference and Date)

To : Assistant Secretary General for Defence Support
NATO/OTAN

Subject : STANAG 4241 (Edition 2) - RATIFICATION DRAFT 1 – BULLET IMPACT, MUNITION TEST PROCEDURES

Reference : AC/310-D/195 dated 12 December 2001

1. (*nation*) ratifies/does not ratify(*) the agreement received under cover reference.

2. Ratification and implementation details are as follows:

RATIFICATION REFERENCE AND DATE	IMPLEMENTATION					
	Forecast Date			Actual Date		
	NAVY	ARMY	AIR	NAVY	ARMY	AIR

3. NATIONAL IMPLEMENTING DOCUMENT(s):

4. RESERVATIONS:

5. OTHER INFORMATION:

.....
(Signature block)

(*) Delete as appropriate

Enclosure to
AC/310-D/195

STANAG 4241
(Edition 2)
(Ratification Draft 1)

NORTH ATLANTIC TREATY ORGANIZATION
(NATO)

NATO STANDARDIZATION AGENCY
(NSA)

STANDARDIZATION AGREEMENT
(STANAG)

SUBJECT: BULLET IMPACT, MUNITION TEST PROCEDURES

Promulgated on 2001

Jan H ERIKSEN
Rear Admiral, NONA
Director, NSA

Enclosure to
AC/310-D/195

STANAG 4241
(Edition 2)
(Ratification Draft 1)

RECORD OF AMENDMENTS

No.	Reference/date of amendment	Date entered	Signature

EXPLANATORY NOTES

AGREEMENT

1. This NATO Standardization Agreement (STANAG) is promulgated by the Director, NSA under the authority vested in him by the NATO Military Committee.

2. No departure may be made from the agreement without consultation with the tasking authority. Nations may propose changes at any time to the tasking authority where they will be processed in the same manner as the original agreement.

3. Ratifying nations have agreed that national orders, manuals and instructions implementing this STANAG will include a reference to the STANAG number for purposes of identification.

DEFINITIONS

4. Ratification is "In NATO Standardization, the fulfilment by which a member nation formally accepts, with or without reservation, the content of a Standardization Agreement" (AAP-6).

5. Implementation is "In NATO Standardization, the fulfilment by a member nation of its obligations as specified in a Standardization Agreement" (AAP-6).

6. Reservation is "In NATO Standardization, the stated qualification by a member nation that describes the part of a Standardization Agreement that it will not implement or will implement only with limitations" (AAP-6).

RATIFICATION, IMPLEMENTATION AND RESERVATIONS

7. Page (iii) gives the details of ratification and implementation of this agreement. If no details are shown it signifies that the nation has not yet notified the tasking authority of its intentions. Page (iv) (and subsequent) gives details of reservations and proprietary rights that have been stated.

FEEDBACK

8. Any comments concerning this publication should be directed to NATO/NSA - Bvd Leopold III, 1110 Brussels - BE.

Enclosure to
AC/310-D/195

STANAG 4241
(Edition 2)
(Ratification draft 1)

RATIFICATION AND IMPLEMENTATION DETAILS
STADE DE RATIFICATION ET DE MISE EN APPLICATION

NATION / PAYS	NATIONAL RATIFICATION REFERENCE REFERENCE DE LA RATIFICATION NATIONALE	NATIONAL IMPLEMENTING DOCUMENT DOCUMENT NATIONAL DE MISE EN APPLICATION	IMPLEMENTATION/MISE EN APPLICATION					
			INTENDED DATE OF IMPLEMENTATION DATE ENVISAGEE DE MISE EN APPLICATION			DATE IMPLEMENTATION WAS ACHIEVED DATE EFFECTIVE DE MISE EN APPLICATION		
			NAVY MER	ARMY TERRE	AIR	NAVY MER	ARMY TERRE	AIR
BE								
CA								
CZ								
DA								
FR								
GE								
GR								
HU								
IT								
LU								
NL								
NO								
PL								
PO								
SP								
TU								
UK								
US								

Enclosure to
AC/310-D/195

STANAG 4241
(Edition 2)
(Ratification Draft 1)

RESERVATIONS/RESERVES

Enclosure to
AC/310-D/195

STANAG 4241
(Edition 2)
(Ratification draft 1)

NAVY/ARMY/AIR

NATO STANDARDIZATION AGREEMENT (STANAG)

BULLET IMPACT, MUNITION TEST PROCEDURES

Annex: None

Related Documents:

AOP-38	Glossary of Terms and Definitions Concerning the Safety and Suitability for Service of Munitions, Explosives, and Related Products
AOP-39	Guidance on the Development, Assessment and Testing of Insensitive Munitions (MURAT)
STANAG 4123	Determination of the Classification of Military Ammunition and Explosives – AASTP-3
STANAG 4439	Policy for Introduction, Assessment and Testing for Insensitive Munitions (MURAT).
United Nations Document (UN) ST/SG/AC.10/11/ Rev 3/R.256	Recommendation on the Transport of Dangerous Goods Manual of Tests and Criteria.

AIM

1. The aim of this agreement is:

   a. to provide a standard test procedure (Procedure 1) for assessing the reaction of a munition to an impact from a three-round burst of M2, calibre 0.50mm, AP projectiles;

   b. to provide an alternative, tailorable, test procedure (Procedure 2) for assessing the reaction, if any, of a munition to the impact of one or more projectiles that are typical of those determined by means of a threat hazard assessment (THA).

AGREEMENT

2. Participating nations agree:

   a. to apply this procedure to all munitions that contain explosives, propellants or pyrotechnics;

   b. to apply one of these procedures as a minimum requirement, and to continue to develop tests for other bullet attack weapons (for example, 20mm AP munition);

   c. that national orders, manuals, and instructions implementing this STANAG will include a reference to the STANAG number for purpose of identification. No departure may be made from the agreement without consultation with the tasking authority. Nations may propose changes at any time to the tasking authority where they will be processed in the same manner as the original agreement.

Enclosure to
AC/310-D/195

STANAG 4241
(Edition 2)
(Ratification Draft 1)

DEFINITIONS

3. For the purpose of this document, the definitions of terms to be used to describe test events are provided in AOP-38, STANAG 4439, and AOP-39.

GENERAL

4. Scope. In addition to the normal environmental and accident conditions for munitions, it is necessary to assess the likely response of munitions that may be exposed to deliberate bullet/projectile attacks. These can occur in peacetime as the result of dissident/saboteur activity, or in wartime as a consequence of enemy action. Munitions that are stowed in unsheltered stores, magazines or launchers, are considered to be particularly vulnerable. The bullet impact test can only represent a particular set of conditions, for example, it is not possible to cater to the wide range of attack weapons, sizes of fragments, strike velocities or angles of attack which may occur in the real world. The assessment takes the form of standardized trials and tests that are described in the following paragraphs.

DETAILS OF THE AGREEMENT

5. Test Selection. Two test procedures are included in this document. Procedure 1 is a standardized test and is intended as a means of jointly assessing Insensitive Munitions (IM) and, Hazard Division (HD) 1.6 requirements (see STANAG 4123, United Nations (UN) document, ST/SG/AC.10/11/ Rev.3/R.256 and STANAG 4439). Procedure 2 is tailorable and its parameters are based on the threat hazard assessment (THA). Either test shall be applied to all munitions containing explosives, propellants or pyrotechnics. When intended to satisfy both IM and Hazard Classification (HC) requirements, the test plans should be coordinated with appropriate authorities in these two areas.

6. Conditioning. If the test is to be conducted at temperatures other than ambient, assure the test item is stabilized at the required temperature before conducting the test.

7. Impact orientation. The test item shall normally be positioned with its longest axis horizontal, on a suitable stand at a height to facilitate ease of testing, but may be oriented otherwise provided the requirements of paragraph 11 are met. If necessary, the item may be strapped or restrained by other means to prevent it from becoming propulsive, but such restraint is not to interfere with instrumentation, nor significantly affect the ability of the charge or motor case to rupture or fragment.

8. Test item configuration. The test item should be in its all-up round configuration (unless otherwise identified by the THA and, for HC purposes, agreed upon by the national HC authority). The explosive items tested must be to the full production standard, although, in the case of complete munitions undergoing test, the non-explosive section of the item need only be geometrically and thermally representative. For all-up rounds that contain more than one major energetic component (such as rocket motors and warheads), the energetic components may be tested either individually or as an all-up round. If tested as an all-up round, each individual component must be subjected to the complete set of individual bullet impacts. The item may be either packaged or unpackaged, as agreed by the appropriate national authorities. Development standard items may be used if the explosive part is identical to the full production standard item, and the changes can be shown to not affect the test result. Development standard items may also be used to effect preliminary assessments of responses. Where it is assessed that the packaged item is most likely to be exposed in the service

environments (including storage, transport and processing), bullet impact tests should be conducted in the packaged configuration.

9. Safety. Stores tested in accordance with the requirements of this procedure may react with violence varying from Type V to Type I reaction or become propulsive (see AOP-39). Consequently, it is the responsibility of the agency conducting the test to ensure the safety of personnel and equipment during preparation of the test, and during and after the performance of the test.

10. Attack Munition and Firing Conditions. The standard attack munition (threat) is the M2, cal 0.50 AP round, fired from a rigidly mounted gun.

11. Target. For Procedure 1 IM tests, two tests are required, one aiming at the largest explosive component, and the other aimed at the most shock-sensitive explosive component (excluding the booster). The target shall be a 5 cm circle. For bullet impacts, a range of approximately 20-30m to the target (sufficient to assure bullet stabilization) is acceptable, the impact velocity must be adjusted to 850 $\pm$ 20 m/s, and the rate of fire shall be equivalent to 600 $\pm$ 50 rounds per min. The exact range from gun to target is to be determined by the test authorities, depending on accuracy and safety aspects. The impact shall be approximately perpendicular to the long axis of the test item. For Procedure 1, Hazard Classification (HC) tests, an additional test (a total of three tests) is performed with the booster as the target. For Procedure 2, parameters should be as determined by the THA and agreed by the appropriate authorities.

12. Observations and Records:

a. The following minimum observations are to be made and records kept:

(1) test item identification (model, serial numbers, number of test items, etc.);

(2) impact velocity and firing rate (if applicable);

(3) blast pressure in two orthogonal directions, three gauges minimum in each direction;

(4) witness plates (optional);

(5) record of events against time from the order to fire to the end of the trial;

(6) the nature of any reactions by the test item;

(7) the nature (size) and distribution of residue and debris (fragmap and recovery technique);

(8) listing of environmental preconditioning test performed;

(9) type of energetic material and weight;

(10) the orientation of the test item's longitudinal axis, and layout of the firing area;

(11) audio record (in combination with high-speed video recording);

(12) indication of propulsion (video or other suitable means);

(13) details of gun and ammunition used;

(14) record of aim point(s) selected.

b. The following photographic records and videos are to be made:

(1) still photographs of the test-item before and after each trial;

(2) still photographs of any other residues arising as a result of the trial;

(3) colour cine-film or video for the duration of each trial.

IMPLEMENTATION OF THE AGREEMENT

13. This STANAG is implemented by a nation when that nation has issued the necessary orders/instructions to its forces:

a. that all future munitions and weapon systems will be assessed / tested in accordance with this agreement;

b. to provide its NATO forces with the details in this agreement with reference to this STANAG.

14. Data developed in accordance with this STANAG shall be made available to other NATO Nations participating in a collaborative weapon development or procurement program, upon receipt of a request submitted through appropriate National channels.